1	MAINE	DPI-006

2/2/95
w/ all revisions to date

STATE OF MAINE
DEPARTMENT OF TRANSPORTATION

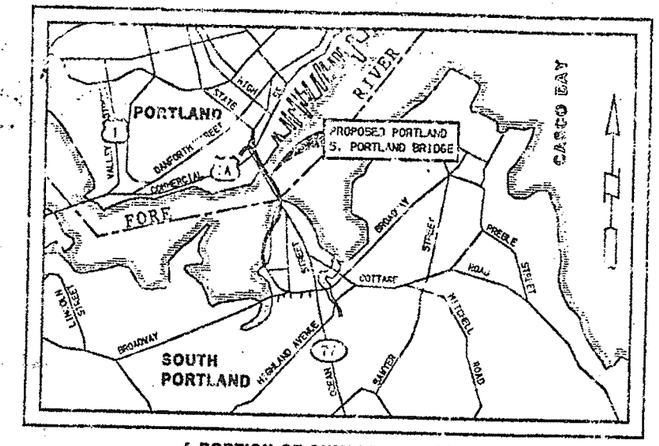

A PORTION OF CUMBERLAND COUNTY

1/2 MILE 0 1/2 MILE 1 MILE

LOCATION MAP

PORTLAND – SOUTH PORTLAND
CUMBERLAND COUNTY

PORTLAND – SOUTH PORTLAND BRIDGE
OVER THE FORE RIVER

SOUTH APPROACH SUPERSTRUCTURE STEEL CONSTRUCTION ALTERNATIVE

PROJECT NO.: **DPI-0068(002)**

PROJECT LENGTH: **0.831 MILES**

HYDROLOGIC DATA

Drainage Area ----------38.9 sq. miles
* Design Discharge (Q50) at Elev. +9.5 ---43,850 cfs
* Check Discharge (Q100) at Elev. +9.8 ---47,400 cfs
Mean High Water----------Elev. +4.8
Mean Tide Level----------Elev. +0.3
Mean Low Water ----------Elev. -4.3
1992 Predicted High Tide ----------Elev. +7.0
Area of river channel for existing and proposed bridges at Elev. 0 --------24,000 sq.ft

* Discharge includes both runoff and tidal effects.

STATE OF MAINE HERBERT H. SNYDER 3516 REGISTERED PROFESSIONAL ENGINEER

Herbert H. Snyder

NOTE:
All work contemplated under this contract to be governed by and in conformity with the STANDARD SPECIFICATIONS (revision of October 1990) and supplementals thereto, except as modified on the plans and in the special provisions.

APPROVED:

STATE OF MAINE
DEPARTMENT OF TRANSPORTATION

DATE

COMMISSIONER

CHIEF ENGINEER

UNITED STATES
DEPARTMENT OF TRANSPORTA
FEDERAL HIGHWAY ADMINISTR
REGION 1

APPROVED:

DIVISION ADMINISTRATOR

PLANS | CHECKED | REVISION | FIELD CHANGES | MCI | 6-94

title.she

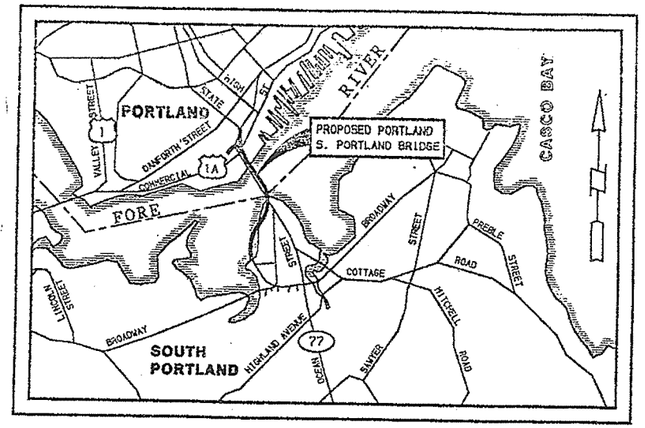

A PORTION OF CUMBERLAND COUNTY

1/2 MILE 0 1/2 MILE 1 MILE

LOCATION MAP

HYDROLOGIC DATA

Drainage Area ----------38.9 sq. miles
* Design Discharge (Q50) at Elev. +9.6 ---43,850 cfs
* Check Discharge (Q100) at Elev. +9.8 ---47,400 cfs
Mean High Water----------Elev. +4.8
Mean Tide Level----------Elev. +0.3
Mean Low Water ----------Elev. -4.3
1992 Predicted High Tide ----------Elev. +7.0
Area of river channel for existing
and proposed bridges at Elev. 0 ---------24,000 sq.ft

* Discharge includes both runoff and tidal effects.

STATE OF MAINE
DEPARTMENT OF TRANSPORTATION

PORTLAND – SOUTH PORTLAND
CUMBERLAND COUNTY

PORTLAND – SOUTH PORTLAND BRIDGE
OVER THE FORE RIVER

SOUTH APPROACH SUPERSTRUCTURE
STEEL CONSTRUCTION ALTERNATIVE

PROJECT NO.: **DPI-0068(002)**

PROJECT LENGTH: **0.831 MILES**

STATE OF MAINE
HERBERT H. SNYDER 3516
REGISTERED PROFESSIONAL ENGINEER

Herbert H. Snyder

NOTE:
All work contemplated under this contract to be governed by and in conformity with the STANDARD SPECIFICATIONS (revision of October 1990) and supplementals thereto, except as modified on the plans and in the special provisions.

APPROVED:

STATE OF MAINE
DEPARTMENT OF TRANSPORTATION

DATE

COMMISSIONER

CHIEF ENGINEER

UNITED STATES
DEPARTMENT OF TRANSP
FEDERAL HIGHWAY ADMIN
REGION 1

APPROVED:

DIVISION ADMINISTRATOR

DESIGN-DETAILED	SLH	6-94
CHECKED	MCI	6-94
REVISION		
FIELD CHANGES		

PLANS

title.sho

F.H.W.A. REG. NO.	STATE	PROJECT
1	MAINE	DPI-DQ

GENERAL NOT

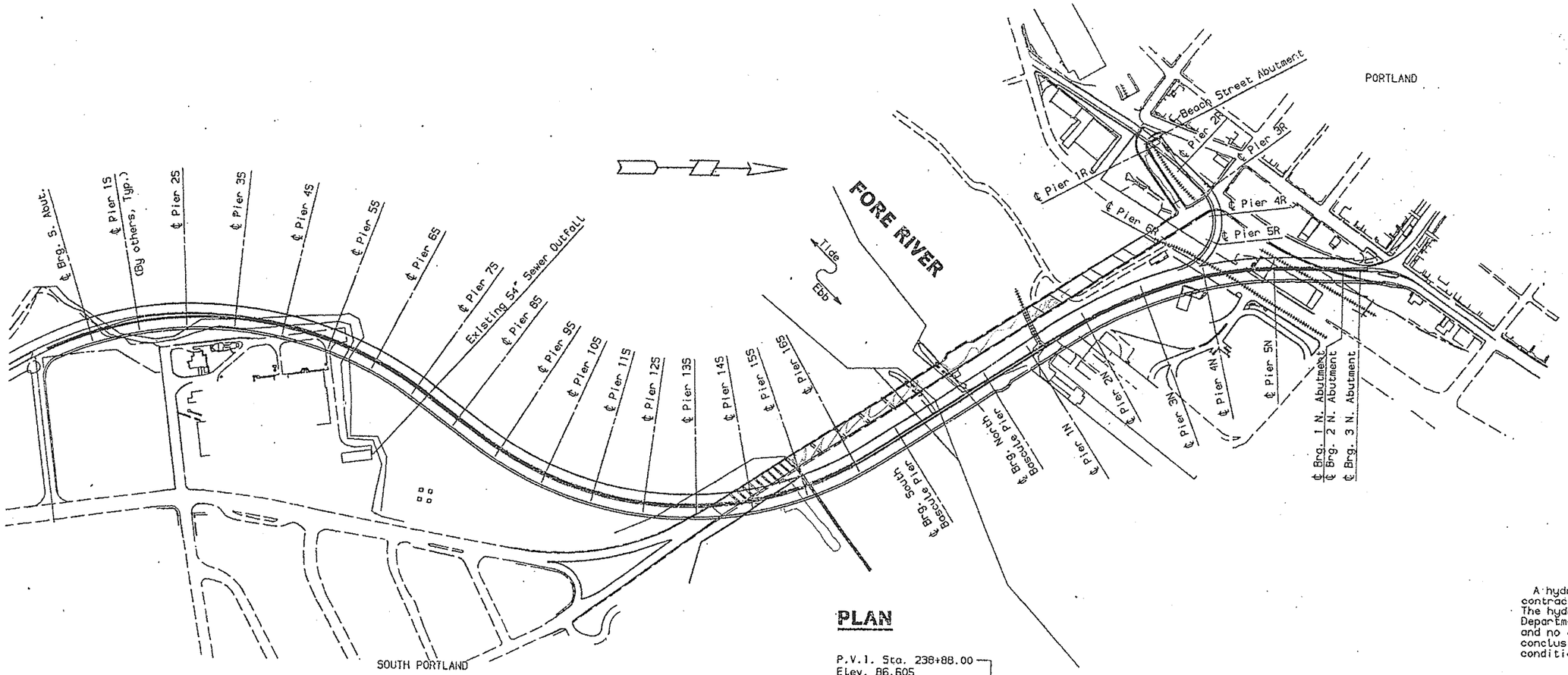

PLAN

Traffic data
A.D.T. 1993 = 31,940
A.D.T. 2013 = 36,330
D.H.V. = 3270
P.S.D. (%) = N/A
T. (%) = 4
D. (%) = 65
V. = N/A
18 Kips P(2.5) = 433

Coast Guard permit required

Datum
Based on 1929 NGVD

Tidal data
Hydrologic data
Drainage Area = 38.9 square mile
* Design discharge (Q50) = 43850 c
* Check discharge (Q100) = 47400 c
Mean high water = Elev. 4.8
Mean tide level = Elev. 0.3
Mean low water = Elev. -4.3
1992 Predicted high tide = Elev.

Existing and proposed opening at 24,000 sq. ft.
*Discharge includes both runoff and tidal effects

A hydraulic report of the bridge site is avai contractor's reference at the Bridge Design Off The hydraulic report is based on the interpreta Department of Information obtained for the subj and no assurance is given that the information conclusions of the report will be representativ conditions at the time of construction.

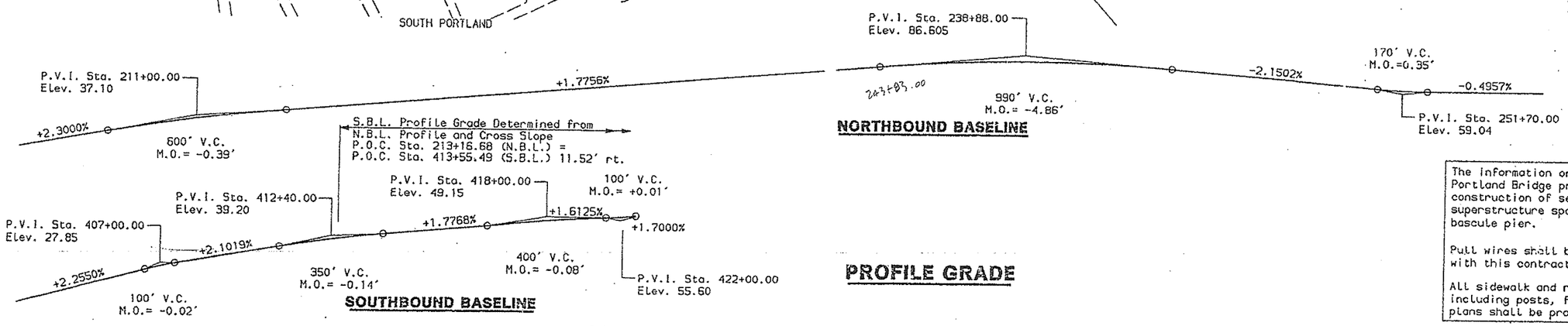

NORTHBOUND BASELINE

SOUTHBOUND BASELINE

PROFILE GRADE

The information on this drawing pertains to the overall Portland-Portland Bridge project. This South Approach contract includes construction of seventeen mainline northbound and southbound superstructure spans extending from the south abutment to the sou bascule pier.

Pull wires shall be provided with all electrical conduits install with this contract.

All sidewalk and roadway fencing for the north and south approach including posts, fence fabric, gates, and other details shown on plans shall be provided and installed as part of this contract.

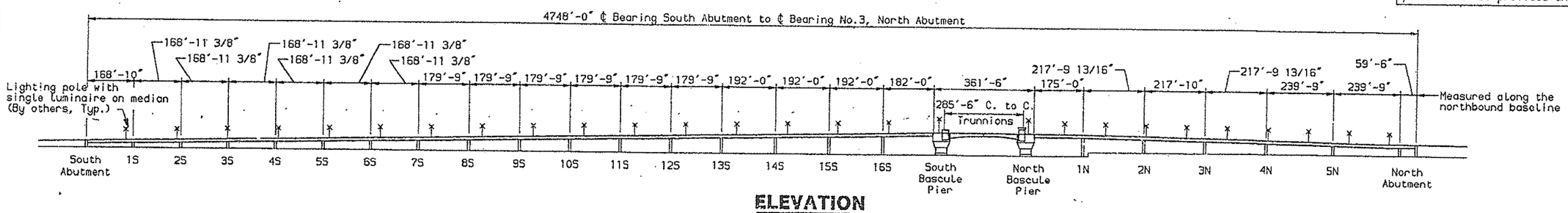

ELEVATION

STEEL ALTERNATIVE

SOUTH APPROACH S

STATE OF MAINE
DEPARTMENT OF TRANSPOR

PORTLAND - S. PORTLA
OVER FORE RIV
CUMBERLAND CO

GENERAL PL
AND ELEVATI

SHEET 2 OF 182 AUGUSTA, MAI

DESIGN-DETAILED	MEB	RAP	6-94
CHECKED	MCI		6-94
REVISION			
FIELD CHANGES			

PLANS

4-18-94
sa.gpe.steel

STEEL ALTERNATIVE SUPERSTRUCTURE - INDEX

SHEET NO.	SHEET TITLE
1	TITLE SHEET
2	GENERAL PLAN AND ELEVATION
3	INDEX OF DRAWINGS
4	ESTIMATE OF QUANTITIES
5	GENERAL NOTES
6	PLAN AND ELEVATION - I
7	PLAN AND ELEVATION - II
8	PLAN AND ELEVATION - III
9	PLAN AND ELEVATION - IV
10	PLAN AND ELEVATION - V
11	KEY GEOMETRY
12	SOUTHBOUND BASELINE, METHOD OF SUPERELEVATION
13	NORTHBOUND BASELINE, METHOD OF SUPERELEVATION
14	FRAMING PLAN, SPANS S1-S4 - I
15	FRAMING PLAN, SPANS S1-S4 - II
16	FRAMING PLAN, SPANS S1-S4 - III
17	FRAMING PLAN, SPANS S5-S9 - I
18	FRAMING PLAN, SPANS S5-S9 - II
19	FRAMING PLAN, SPANS S5-S9 - III
20	FRAMING PLAN, SPANS S5-S9 - IV
21	FRAMING PLAN, SPANS S10-S13 - I
22	FRAMING PLAN, SPANS S10-S13 - II
23	FRAMING PLAN, SPANS S10-S13 - III
24	FRAMING PLAN, SPANS S14-S17 - I
25	FRAMING PLAN, SPANS S14-S17 - II
26	FRAMING PLAN, SPANS S14-S17 - III
27	ELEVATION GIRDER 1, SPANS S1-S4 - I
28	ELEVATION GIRDER 1, SPANS S1-S4 - II
29	ELEVATION GIRDER 2, SPANS S1-S4 - I
30	ELEVATION GIRDER 2, SPANS S1-S4 - II
31	ELEVATION GIRDER 3, SPANS S1-S4 - I
32	ELEVATION GIRDER 3, SPANS S1-S4 - II
33	ELEVATION GIRDER 4, SPANS S1-S4 - I
34	ELEVATION GIRDER 4, SPANS S1-S4 - II
35	ELEVATION GIRDER 5, SPANS S1-S4 - I
36	ELEVATION GIRDER 5, SPANS S1-S4 - II
37	ELEVATION GIRDER 6, SPANS S1-S4 - I
38	ELEVATION GIRDER 6, SPANS S1-S4 - II
39	ELEVATION GIRDER 7, SPANS S1-S4 - I
40	ELEVATION GIRDER 7, SPANS S1-S4 - II
41	ELEVATION GIRDER 1, SPANS S5-S9 - I
42	ELEVATION GIRDER 1, SPANS S5-S9 - II
43	ELEVATION GIRDER 2, SPANS S5-S9 - I
44	ELEVATION GIRDER 2, SPANS S5-S9 - II
45	ELEVATION GIRDER 3, SPANS S5-S9 - I
46	ELEVATION GIRDER 3, SPANS S5-S9 - II
47	ELEVATION GIRDER 4, SPANS S5-S9 - I
48	ELEVATION GIRDER 4, SPANS S5-S9 - II
49	ELEVATION GIRDER 5, SPANS S5-S9 - I
50	ELEVATION GIRDER 5, SPANS S5-S9 - II
51	ELEVATION GIRDER 6, SPANS S5-S9 - I
52	ELEVATION GIRDER 6, SPANS S5-S9 - II
53	ELEVATION GIRDER 1, SPANS S10-S13
54	ELEVATION GIRDER 2, SPANS S10-S13
55	ELEVATION GIRDER 3, SPANS S10-S13
56	ELEVATION GIRDER 4, SPANS S10-S13
57	ELEVATION GIRDER 5, SPANS S10-S13
58	ELEVATION GIRDER 6, SPANS S10-S13
59	ELEVATION GIRDER 1, SPANS S14-S17 - I
60	ELEVATION GIRDER 1, SPANS S14-S17 - II
61	ELEVATION GIRDER 2, SPANS S14-S17 - I
62	ELEVATION GIRDER 2, SPANS S14-S17 - II
63	ELEVATION GIRDER 3, SPANS S14-S17 - I
64	ELEVATION GIRDER 3, SPANS S14-S17 - II
65	ELEVATION GIRDER 4, SPANS S14-S17 - I
66	ELEVATION GIRDER 4, SPANS S14-S17 - II
67	ELEVATION GIRDER 5, SPANS S14-S17 - I
68	ELEVATION GIRDER 5, SPANS S14-S17 - II
69	ELEVATION GIRDER 6, SPANS S14-S17 - I
70	ELEVATION GIRDER 6, SPANS S14-S17 - II
71	ELEVATION GIRDER 7, SPANS S14-S17 - I
72	ELEVATION GIRDER 7, SPANS S14-S17 - II
73	MISCELLANEOUS STEEL DETAILS - I
74	MISCELLANEOUS STEEL DETAILS - II
75	MISCELLANEOUS STEEL DETAILS - III
76	MISCELLANEOUS STEEL DETAILS - IV
77	CAMBER DETAILS, GIRDERS 1-7 SPANS S1-S4 - I
78	CAMBER DETAILS, GIRDERS 1-7 SPANS S1-S4 - II
79	CAMBER DETAILS, GIRDERS 1-6 SPANS S5-S9 - I
80	CAMBER DETAILS, GIRDERS 1-6 SPANS S5-S9 - II
81	CAMBER DETAILS, GIRDERS 1-6 SPANS S5-S9 - III
82	CAMBER DETAILS, GIRDERS 1-6 SPANS S10-S13 - I
83	CAMBER DETAILS, GIRDERS 1-6 SPANS S10-S13 - II
84	CAMBER DETAILS, GIRDERS 1-7 SPANS S14-S17 - I
85	CAMBER DETAILS, GIRDERS 1-7 SPANS S14-S17 - II
86	CAMBER DETAILS, GIRDERS 1-7 SPANS S14-S17 - III
87	TOP FLANGE, FIELD SPLICE DETAILS - I
88	TOP FLANGE, FIELD SPLICE DETAILS - II
89	BOTTOM FLANGE, FIELD SPLICE DETAILS - I
90	BOTTOM FLANGE, FIELD SPLICE DETAILS - II
91	WEB, FIELD SPLICE DETAILS
92	CROSS FRAME, DETAILS - I
93	CROSS FRAME, DETAILS - II
94	CROSS FRAME, DETAILS - III
95	CROSS FRAME, DETAILS - IV
96	CROSS FRAME, DETAILS - V
97	CROSS FRAME, DETAILS - VI
98	GLAND SEAL DETAILS, SOUTH ABUTMENT
99	FINGER JOINT DETAILS, PIER 4S - I
100	FINGER JOINT DETAILS, PIER 4S - II
101	FINGER JOINT DETAILS, PIER 9S - I
102	FINGER JOINT DETAILS, PIER 9S - II
103	FINGER JOINT DETAILS, PIER 13S - I
104	FINGER JOINT DETAILS, PIER 13S - II
105	FINGER JOINT DETAILS, SOUTH BASCULE PIER - I
106	FINGER JOINT DETAILS, SOUTH BASCULE PIER - II
107	POT BEARING, DETAILS - I
108	POT BEARING, DETAILS - II
109	POT BEARING, DETAILS - III
110	POT BEARING, DETAILS - IV
111	INSPECTION WALK, LOCATION PLAN
112	INSPECTION WALK, DETAILS - I
113	INSPECTION WALK, DETAILS - II
114	SOUTH APPROACH, DRAINAGE PLAN - I
115	SOUTH APPROACH, DRAINAGE PLAN - II
116	SOUTH APPROACH, DRAINAGE PLAN - III
117	SOUTH APPROACH, DRAINAGE PLAN - IV
118	SOUTH APPROACH, DRAINAGE PLAN - V
119	DRAINAGE DETAILS - I
120	DRAINAGE DETAILS - II
121	DRAINAGE DETAILS - III
122	DRAINAGE DETAILS - IV
123	SLAB PLAN, SPANS S1-S4 - I
124	SLAB PLAN, SPANS S1-S4 - II
125	SLAB PLAN, SPANS S1-S4 - III
126	SLAB PLAN, SPANS S5-S9 - I
127	SLAB PLAN, SPANS S5-S9 - II
128	SLAB PLAN, SPANS S5-S9 - III
129	SLAB PLAN, SPANS S5-S9 - IV
130	SLAB PLAN, SPANS S10-S13 - I
131	SLAB PLAN, SPANS S10-S13 - II
132	SLAB PLAN, SPANS S10-S13 - III
133	SLAB PLAN, SPANS S14-S17 - I
134	SLAB PLAN, SPANS S14-S17 - II
135	SLAB PLAN, SPANS S14-S17 - III
136	SLAB DETAILS - I
137	SLAB DETAILS - II
138	SLAB DETAILS - III
139	SLAB DETAILS - IV
140	SOUTH APPROACH, SLAB CROSS SECTION - I
141	SOUTH APPROACH, SLAB CROSS SECTION - II
142	SOUTH APPROACH, SLAB CROSS SECTION - III
143	SOUTH APPROACH, SLAB CROSS SECTION - IV
144	SOUTH APPROACH, SLAB CROSS SECTION - V
145	BOTTOM OF SLAB ELEVATIONS, SPANS S1-S2
146	BOTTOM OF SLAB ELEVATIONS, SPANS S3-S4
147	BOTTOM OF SLAB ELEVATIONS, SPANS S5-S6
148	BOTTOM OF SLAB ELEVATIONS, SPANS S7-S8
149	BOTTOM OF SLAB ELEVATIONS, SPANS S9-S10
150	BOTTOM OF SLAB ELEVATIONS, SPANS S11-S12
151	BOTTOM OF SLAB ELEVATIONS, SPANS S13-S14
152	BOTTOM OF SLAB ELEVATIONS, SPANS S15-S16
153	BOTTOM OF SLAB ELEVATIONS, SPANS S17
154	SUPERSTRUCTURE, BAR SCHEDULE - I
155	SUPERSTRUCTURE, BAR SCHEDULE - II
156	SUPERSTRUCTURE, BAR SCHEDULE - III
157	SUPERSTRUCTURE, BAR SCHEDULE - IV
158	SUPERSTRUCTURE, BAR SCHEDULE - V
159	SUPERSTRUCTURE, BAR TYPES - I
160	SUPERSTRUCTURE, BAR TYPES - II
161	LIGHTING PLAN - I
162	LIGHTING PLAN - II
163	LIGHTING PLAN - III
164	LIGHTING PLAN - IV
165	LIGHTING PLAN - V
166	CONDUIT LAYOUT, GATES AND SIGNALS - I
167	CONDUIT LAYOUT, GATES AND SIGNALS - II
168	FENCE PLAN
169	FENCE DETAILS - I
170	FENCE DETAILS - II
171	FENCE DETAILS - III
172	FENCE DETAILS - IV
173	FENCE DETAILS - V
173A	FENCE DETAILS - VI
174	BORING LOCATION PLAN (I) △1
175	BORING LOCATION PLAN (II)
176	RIGHT-OF-WAY (PLAN I) — MAP △1
177	RIGHT-OF-WAY (PLAN II) — MAP △1
178	RIGHT-OF-WAY (PLAN III) — MAP △1
178A	RIGHT-OF-WAY (PLAN IV) — MAP △1
178B	RIGHT-OF-WAY (PLAN V) — MAP △1
178C	RIGHT-OF-WAY (PLAN VI) — MAP △1
	BRIDGE STANDARDS
179	BD 302-93, EXPANSION DEVICE - GLAND SEAL
180	BD 304-93, EXPANSION DEVICE - FINGER JOINT
181	BD 403-93, ALUMINUM BRIDGE RAILING-PEDESTRIAN RAILING
182	BD 521-93, SUPERSTRUCTURE DETAILS
182A	T7, STANDARD DETAILS-HIGHWAY SIGNING
178D	RIGHT-OF-WAY MAP △1

△1 Revised, 10-07-94

PLANS			
DESIGN-DETAILED	MCI	ELS	6-94
CHECKED	MCI		9-94
REVISION	MCI		10-94
FIELD CHANGES			

SOUTH APPROAC

STATE OF MAI
DEPARTMENT OF TRANS

PORTLAND - S. PORTI
OVER FORE R
CUMBERLAND C

INDEX OF DRA

so.dgn.lst

0-28-94

F.H.W.A. REG. NO.	STATE	PROJECT NU
1	MAINE	OPI-0068(

ESTIMATED QUANTITIES

Item Number	Item Description	Item Unit	Quantity
108.51	Prosecution of Work – Initial Schedule ~~South Approach Superstructure, Steel Alternative~~ △3	Lump Sum	1
108.52	Prosecution of Work – Monthly Update ~~South Approach Superstructure, Steel Alternative~~ △3	Each	24
403.10	Hot Bituminous Pavement, Grading D	Ton	3840
502.26	Structural Concrete Roadway and Sidewalk Slab on Steel Bridges	Lump Sum	1
502.29	Structural Concrete Wearing Surface on Bridges	Lump Sum	1
502.4711	Silica Fume Additive	Lump Sum	1
	△2 Lump Sum		
503.141	Epoxy-coated Reinforcing Steel, Fabricated and Delivered	~~Pound~~	~~2760000~~
503.151	Epoxy-coated Reinforcing Steel, Placing	~~Pound~~	~~2760000~~
504.70	Structural Steel Fabricated and Delivered, Grade 36 △3	Lump Sum	1
504.71	Structural Steel Erection	~~Pound~~	~~9580000~~
505.08	Shear Connectors	Lump Sum	1
506.30	Shop Coating of Structural Steel	~~Pound~~	~~9580000~~
506.31	Field Repair of Damaged Coating	~~Pound~~	~~9580000~~
507.212	1'-10" Bridge Railing	L.F.	4643
507.213	4'-2" Bridge Railing	L.F.	2458
507.214	4'-10" Bridge Railing	L.F.	910
507.215	7'-2" Bridge Railing	L.F.	2210
508.13	Membrane Waterproofing	Lump Sum	1
514.06	Curing Box for Concrete Cylinders	Each	3
△2 515.21	~~512.27~~ Protective Coating for Concrete Surfaces	Lump Sum	1
520.21	Expansion Device – Gland Seal South Abutment	Each	1
520.23	Expansion Device – Finger Joint, Pier 4S	Each	1
520.23	Expansion Device – Finger Joint, Pier 9S	Each	1
520.23	Expansion Device – Finger Joint, Pier 13S	Each	1
520.23	Expansion Device – Finger Joint, South Bascule Pier	Each	1
△3	504.70 Structural Steel Fabricated and Delivered Grade 50	Lump Sum	1

ESTIMATED QUANTITIES

Item Number	Item Description	Item Unit	Quantity
△2 521.31 ~~521.30~~	Fabric Trough for Finger Joint, Pier 4S	Each	1
~~521.30~~	Fabric Trough for Finger Joint, Pier 9S	Each	1
~~521.30~~	Fabric Trough for Finger Joint, Pier 13S	Each	1
~~521.30~~	Fabric Trough for Finger Joint, South Bascule Pier	Each	1
523.10	Pot Bearings	Each	136
526.31	Permanent Concrete Barrier, Type II	L.F.	3023
526.32	Permanent Concrete Barrier, Type III	L.F.	6038
△2 ~~627.61~~	~~4 inch Solid White Pavement Marking Line~~	~~L.F.~~	~~12075~~
△2 ~~627.62~~	~~4 inch Broken White Pavement Marking Line~~	~~L.F.~~	~~6038~~
638.01	Embedded Work in Structure	Lump Sum	1
639.22	Testing Facilities Bitiminous Mixes	Lump Sum	1
652.31	Type I Barricade	Each	20
652.312	Type III Barricade	Each	3
652.33	Drum	Each	25
652.34	Cone	Each	20
652.361	Maintenance of Traffic Control Devices	Lump Sum	1
652.38	Flaggers	Man Hours	500
659.10	Mobilization	Lump Sum	1
660.21	On-the-job Training (Bid)	Man Hours	3000

ESTIMATE OF LUMP SUM QUANTITIES

Item Number	Item Description	Item Unit	Qu
502.26	Structural Concrete Roadway and Sidewalk Slab on Steel Bridges	C.Y.	
502.29	Structural Concrete Wearing Surface on Bridges	C.Y.	
502.4711	Silica Fume Additive	Lbs.	7
504.70	Structural Steel Fabricated and Delivered, grade 50	Lbs.	81
504.70	Structural Steel Fabricated and Delivered, grade 36	Lbs.	14
505.08	Shear Connectors	Each	4

NOTES:

Lump Sum Item 504.70 "Structural Steel Fabricated and Delivered, gr. 36" includes 459,000 pounds of material for longitudinal inspection walkways on Spans S2 thru S17 and transverse walkways on Piers 1S thru 16S, ladders, railings, flooring, the 1"ø threaded bar, utility supports, all drain pipe support brackets and collection boxes directly attached to the structural steel, and other items necessary to complete these items of work.
Lump Sum Item 504.71 "Structural Steel Erection" includes the erection of longitudinal inspection and transverse pier walkways, ladders, flooring, and other items necessary to complete these items of work.
Placement of and payment for the volume of 1'-1" wide sidewalk curb is included in Item 502.26.

△3 Revised 10-7-94

△2 Revised per Addendum No.4

△1 Revised Sheet See Addendum No.1

SOUTH APPROACH SI

STATE OF MAINE
DEPARTMENT OF TRANSPOR

PORTLAND - S.PORTLAND

OVER FORE RIVEI

CUMBERLAND COUN

ESTIMATE OF QUAN

SHEET 4 OF 182 AUGUSTA, MAINE

PLANS		
CHECKED	HCB	10-94
REVISION	MCI	7-94
FIELD CHANGES		6-94

STEEL ALTERNATIVE - SUPERSTRUCTURE GENERAL NOTES

F.H.W.A. REG. NO.	STATE	PROJE
1	MAINE	DPI-C

Specifications

Design: Load Factor Design

Design Division I of the AASHTO Standard Specifications for Highway Bridges, 15th Edition, 1992.

Seismic design is in accordance with the AASHTO Standard Specification for Seismic Design of Highway Bridges, 1983, and as modified by the 1991 Interim Specifications, for the following parameters:

1. A (acceleration coefficient) = 0.10
2. Cs (elastic seismic response coefficient or lateral design force coefficient) ≤ 2.5 x A
3. R (response modification factor) = in accordance of Table 3 of the referenced seismic specification.
4. SPC (seismic performance category) = B
5. S (soil profile type) = I
6. IC (importance classification) = I
7. Strength design method

Welding: ANSI/AASHTO/AWS Bridge Welding Code (D1.5-88) and the contract special provisions.

The nominal fatigue resistance of the steel superstructure is determined from section 6.5.2 of the proposed LRFD BRIDGE DESIGN CODE, third draft, April 1992.

Contract: Materials and workmanship to be provided in accordance with the State of Maine, Department of Transportation, Standard Specifications, Highway and Bridges, revision of October, 1990, and the contract special provisions.

Design Loading

Live Load: AASHTO HS25, and alternate military loading.

Fatigue: Fatigue design is based on A.D.T. 1993 = 31,940
A.D.T. 2013 = 36,330
T.(%) = 4
D.(%) = 65

N = Number of stress range cycles of the fatigue truck for a design life of 75 years.
N = 64,000,000 cycles

Dead and Live Load distribution for design of girders and cross-frames is based on a three dimensional finite element analysis.

Materials

Concrete: Deck, barrier and parapets - Class A
Sidewalk wearing surface - Class AA*F

Reinforcing steel: AASHTO M31 (ASTM A615), epoxy coated, grade 60

Structural steel : AASHTO M270 (ASTM A709), grade 50,
AASHTO M270 (ASTM A709), grade 36,
& AASHTO M183 (ASTM A36)

Basic Design Stresses

Concrete: Deck, f'c = 4000 psi
Reinforcing Steel:, fy = 60000 psi
Structural Steel: Fy = 50000 psi and Fy = 36000 psi

Existing Structure

Maintenance of four lanes of traffic, 2 lanes each way, across the existing bridge and mandatory traffic runaround structures will be required at all times.

Plans for the existing bridge are available for the Contractor's reference at the Bridge Design Office, Augusta. The plans are reproductions of original drawings as prepared for construction of the bridge and it is very unlikely that the plans will show any or all construction field changes or alterations that may have been made to the bridge during its life span.

Structure Geometry

All structure geometry is based upon and is compatible with reference point(s) and tie(s) shown on sheet , "KEY GEOMETRY".

All dimensions are horizontal except as noted.

Layout dimensions and lengths of girders shown are horizontal dimensions and must have the additional lengths added for the lengths along grade.

Camber ordinates, as shown on the plans, are computed to compensate for all dead load deflections and for the curvature of the finished grade profile and superelevation. Detail diaphragm and cross frame members to fit the cambered (no load) position of the girders.

A minimum of three adjoining field sections of a continuous girder shall be used during shop assembling in accordance with Section 504.26 of the Standard Specifications.

Structural Metalwork and Bolted Connections

Provide structural steel conforming to AASHTO M270 (ASTM A709), Gr 50, except when noted otherwise.

Heat curving in accordance with Supplemental Specifications Section 504 or flame cutting of flange plates for curved girders will be permitted.

Filler plates may be AASHTO M270 (ASTM A709), grade 36 steel and mill tests for filler plate material will not be required.

Bearing stiffeners shall be plumb after erection and dead load deflection of the structure.

Intermediate web stiffeners or intermediate cross-frame connection plates shall be normal to the top flange, unless otherwise shown on the plans.

The bearing details are shown for normal temperature of 45° F.. No separate payment will be made for resetting bearings to the final position if adjustments are required.

All fasteners are 7/8-inch diameter AASHTO M164 (ASTM A325) high strength galvanized bolts, except as noted. △2

Bolted connections are designed as slip-critical joints with all faying surfaces having a Class B slip coefficient.

Welding

No transverse butt-weld splices will be allowed in the flange plates or web plates within 10 feet or 10 percent of the span length (whichever is greater) from the points of maximum positive moment or maximum negative moment, unless otherwise shown on the plans.

Butt-weld splices in flanges shall be not less than three feet from transverse butt-welds in the web plates and no transverse web or flange butt-welds shall be located within three feet from transverse welds (e.g. connection plate to web welds) on either flange or web, unless otherwise shown on the plans.

Sections of flange plates or web plates between transverse shop splices or between a transverse shop splice and a field splice shall be not less than 40 feet in length, unless otherwise shown on the plans.

Notch toughness requirements, as specified in Table S1.2 of AASHTO Interim Specifications for Transportation Materials and Methods of Sampling And Testing, Part I - Interim Specifications (1992) are mandatory for all main load-carrying members. For the purpose of this specification, main load-carrying members shall be those parts of the structure carrying calculated stresses, including webs and flanges of welded plate girders, rolled shapes used as girders, floorbeams and stringers, all components of cross-frames including girder web connection plates and girder bearing stiffeners, and all splice material for the listed members other than filler plates.

Concrete Construction

All reinforcing steel bars shall be epoxy coated.

Adjust reinforcing steel to fit around the drains in a manner approved by the Engineer. Do not cut transverse reinforcing bars.

Provide 2-inch concrete cover on reinforcing steel bars, unless otherwise shown.

Form a 1" V-groove on the fascias at the horizontal joint between the curb or parapet and the slab.

△3 ~~For all spans deck-slab concrete placement shall be done according to State of Maine BDM, page 1060(1).~~ Continuous placement of the deck slab concrete in either direction will be permitted, however, if staged placement is used follow the sequence shown in the plans.

Screed rails for deck slab finishing machine wheel loads to be supported directly above girders.

Keep concrete plastic within a placement until the entire placement is complete.

All concrete in the parapets, median barrier, and sidewalk wearing surface shall contain a silica fume additive in accordance with Section 701.12 of the Standard Specifications.

Supporting devices (diagonal braces) for support of deck slab forming shall extend to the junction of the web and bottom flange. Submit working drawings of the proposed forms and supporting system for approval in accordance with section 502.20 of the standard specifications.

Costs to build forms and place concrete in the top portion of the south abutment backwall to be included in the Lump Sum price bid for Item 502.26.

△3 Concrete in the back and ahead station areas blocked out for expansion dam support at the bascule pier shall be placed in this contract. Payment will be included in the lump sum bid for Item 502.29.

△1 Utilities

All nonembedded utilities and conduits, utility enclosures, and utility hangers, straps and rods as shown on the plans shall be furnished and installed by others. The Contractor, however, shall furnish and install the 6"x6"x1/2" utility support angles between girders 1 and 2 as detailed on the plans.

△1 Revised per Addendum No. 1.
△3 Revised per Addendum No. 3.
△5 Revised per Addendum No. 5.

DATE	BY	CHK	REVISION
6-94	SLH,ELS	MCI	DESIGN-DETAILED
6-94		MCI	CHECKED
10-94		MCI	REVISION
			FIELD CHANGES

PLANS

sa.gn

SOUTH APPROACH
STATE OF MAINE
DEPARTMENT OF TRANSPO
PORTLAND - S. PORTLA
OVER FORE RIV
CUMBERLAND CO
GENERAL NO

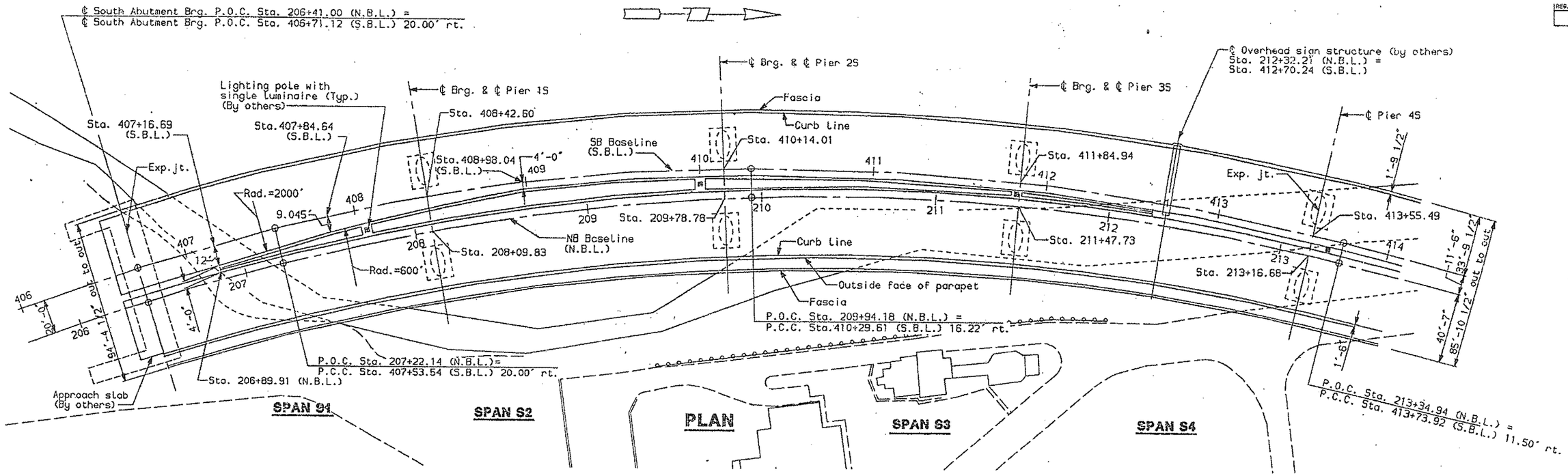

REG. NO.		
1	MAINE	DPI-0068

PLANS

CHECKED	PDB	6-94
REVISION		
FIELD CHANGES		

4-18-94

pesa.1

SOUTH APPROACH S

STATE OF MAINE
DEPARTMENT OF TRANSPORT

PORTLAND - S. PORTLAN
OVER FORE RIVE
CUMBERLAND COU

SOUTH APPRO
PLAN & ELEVATI

SHEET 6 OF 182 AUGUSTA, MAIN

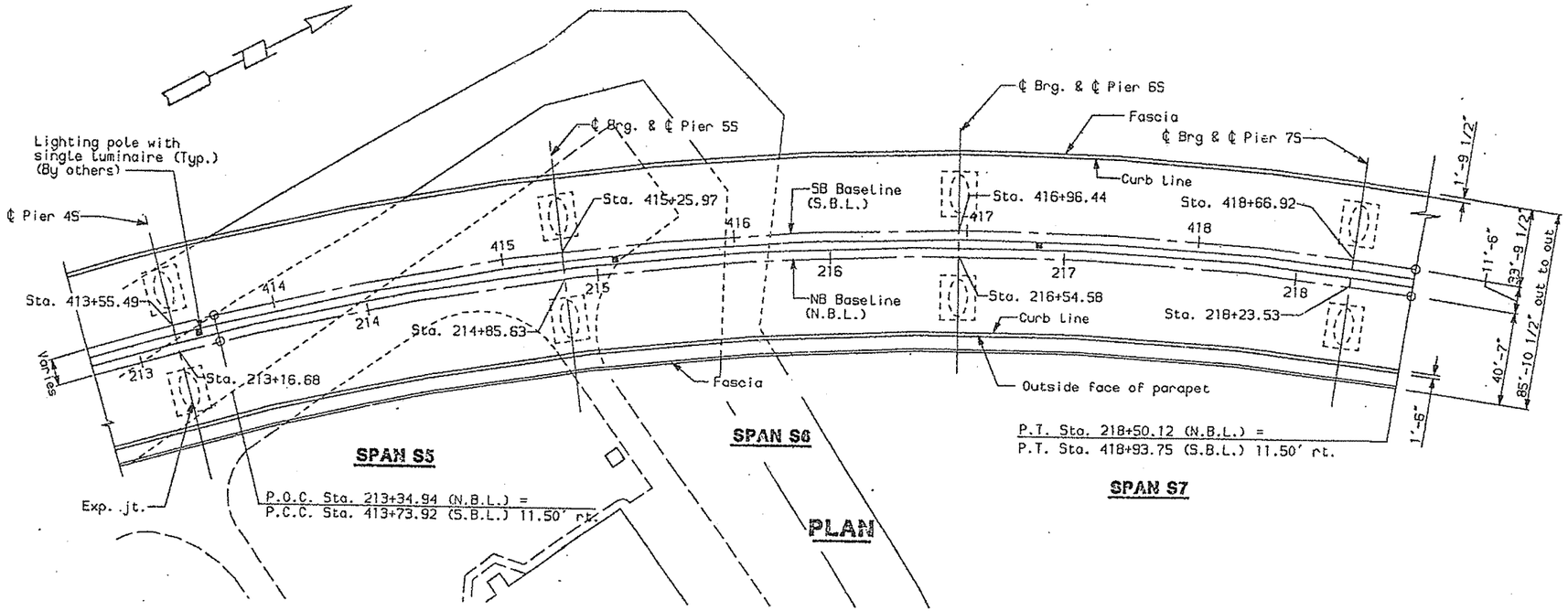

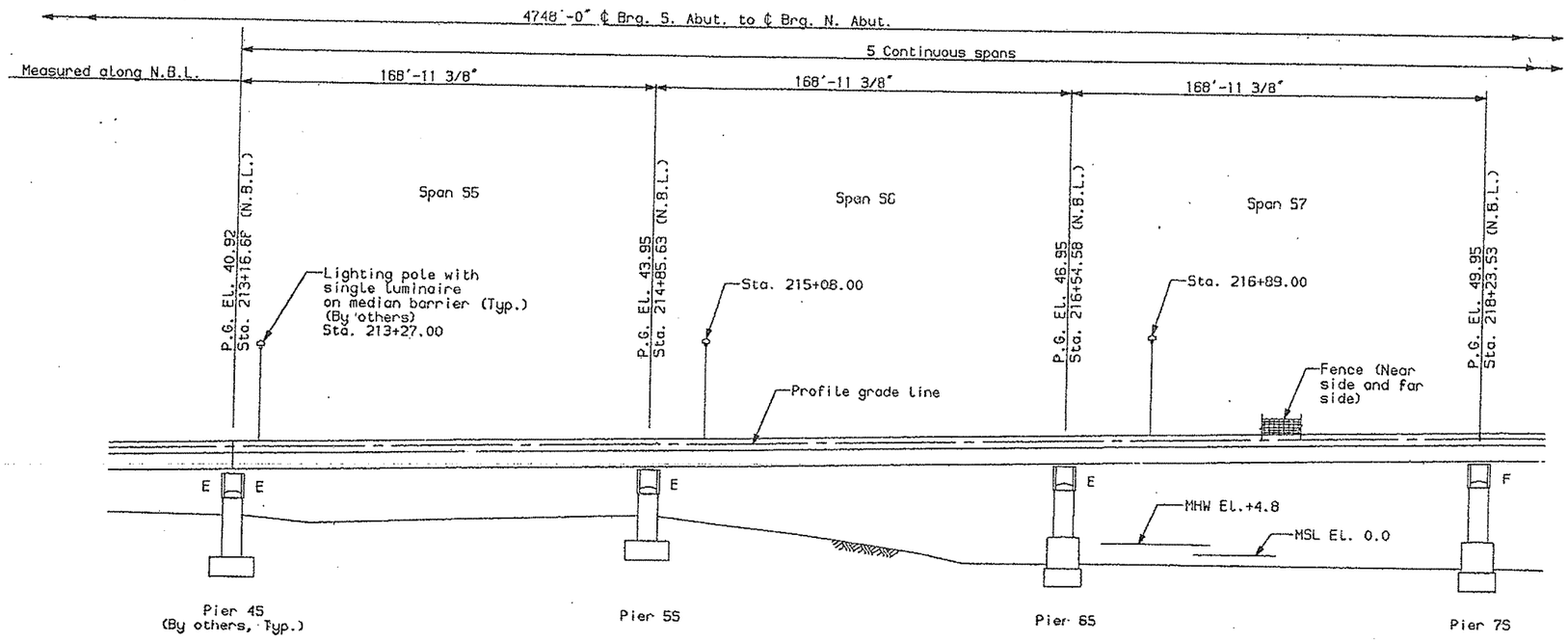

ELEVATION

F.H.W.A. REQ. NO.	STATE	PROJ
1	MAINE	DPI-

DESIGN-DETAILED	MCI	BLS 6-94
CHECKED		PDB 6-94
REVISION		
FIELD CHANGES		

PLANS

4-18-94

page 2

SOUTH APPROACH

STATE OF MAINE
DEPARTMENT OF TRANSPO

PORTLAND - S. PORTLA
OVER FORE RIV
CUMBERLAND CO

SOUTH APPRO
PLAN & ELEVATI

SHEET 7 OF 182 AUGUSTA, MA

F.H.W.A. REG. NO.	STATE	PROJECT
1	MAINE	OPI-00

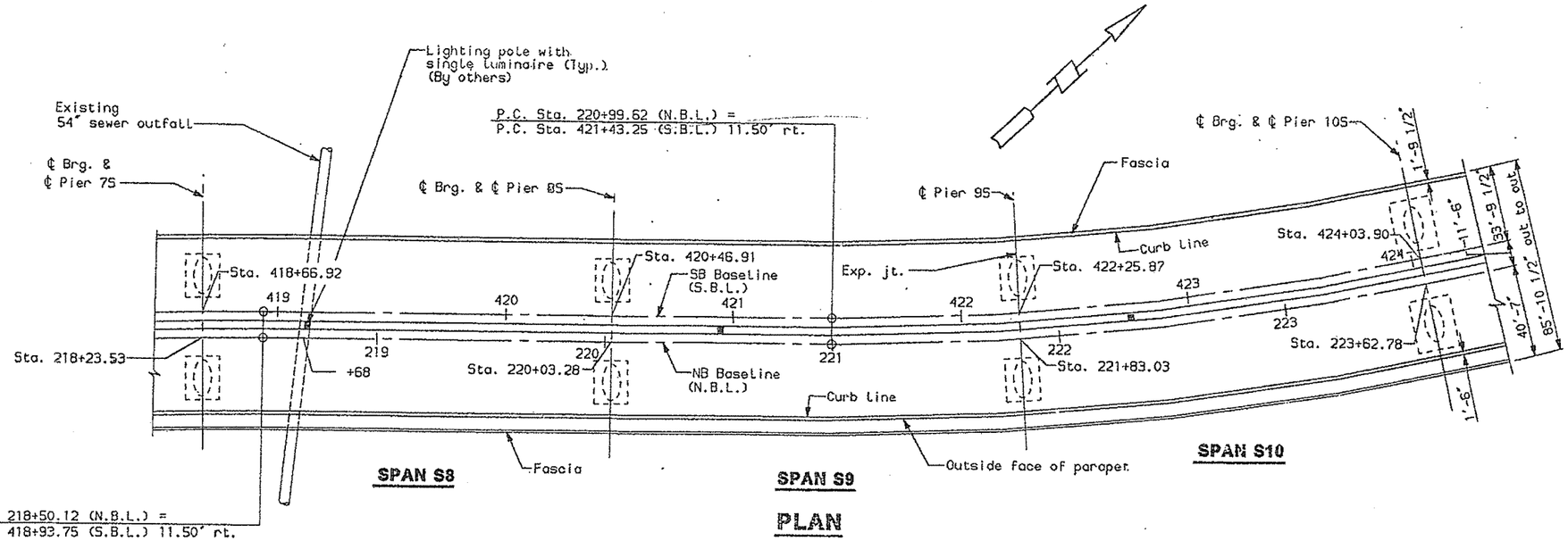

PLAN

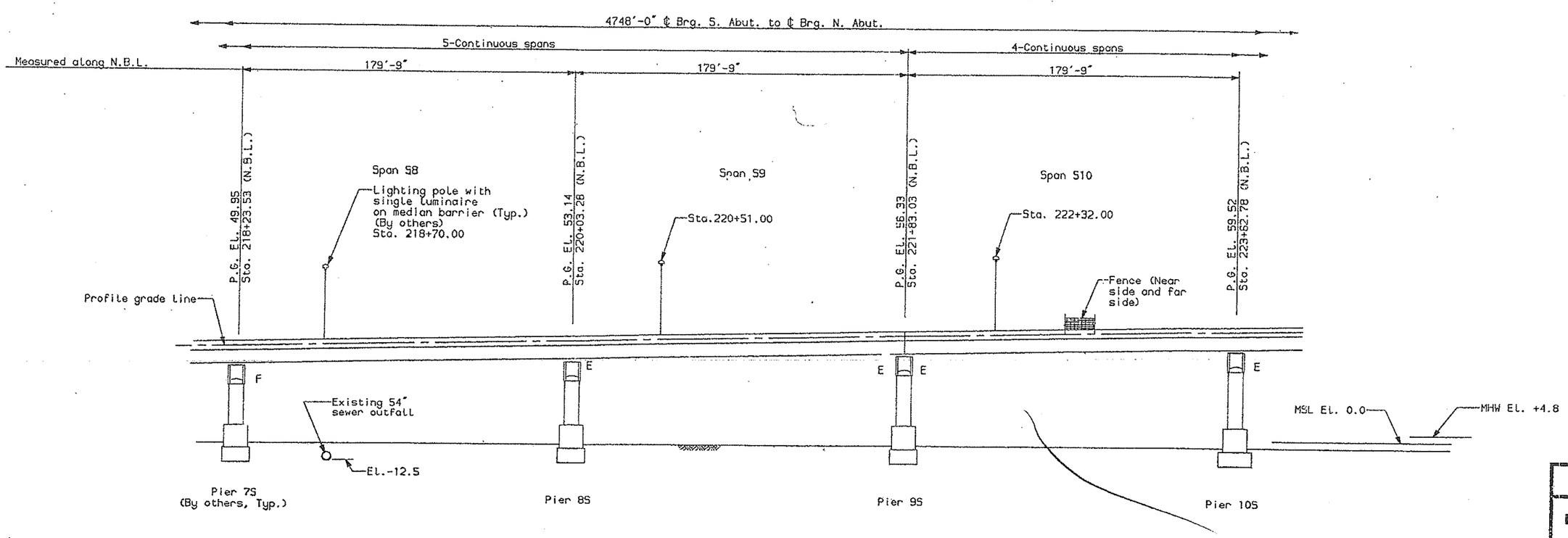

ELEVATION

SOUTH APPROACH

STATE OF MAINE
DEPARTMENT OF TRANSPOR

PORTLAND - S. PORTLA
OVER FORE RIV
CUMBERLAND CO

SOUTH APPRO
PLAN & ELEVATI

SHEET 8 OF 182 AUGUSTA, MAI

DETAILED	MCT	EL3	6-94
CHECKED		PDB	6-94
REVISION			
FIELD CHANGES			

PLANS

4-18-94

pesa.3

F.H.W.A. REG. NO.	STATE	PROJ
1	MAINE	DPI-

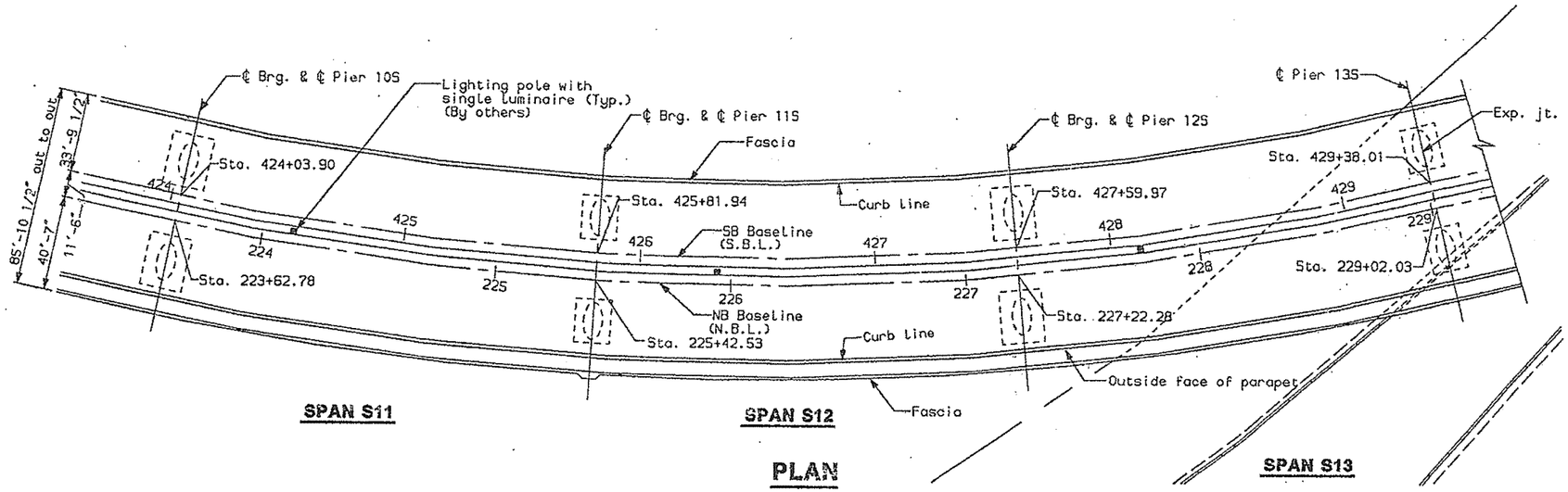

PLAN

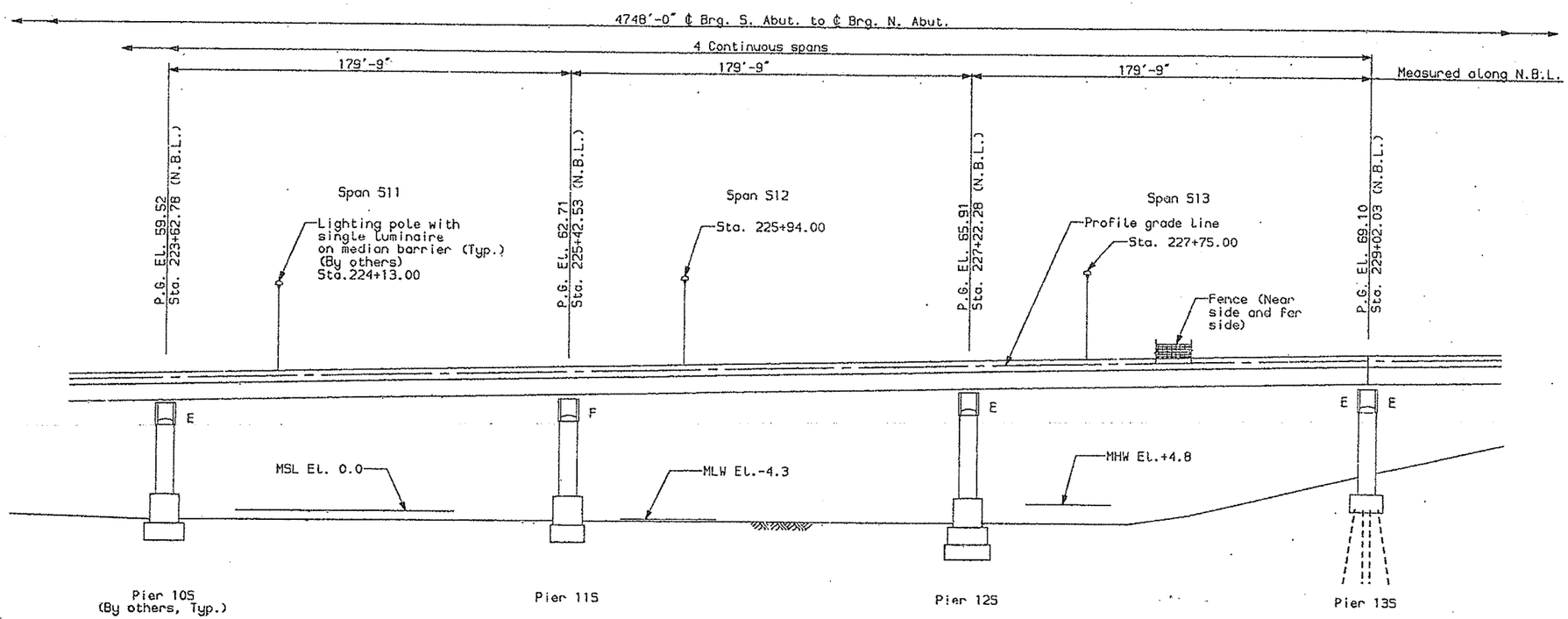

ELEVATION

DESIGN-DETAILED	MCI	ELS	5-94
CHECKED		PDB	6-94
REVISION			
FIELD CHANGES			

PLANS

4-18-94

page.4

SOUTH APPROACH

STATE OF MAIN
DEPARTMENT OF TRANSP

PORTLAND - S. PORTL
OVER FORE RI
CUMBERLAND C

SOUTH APPR
PLAN & ELEVAT

SHEET 9 OF 182 AUGUSTA, M

REG. NO.	STATE	PROJECT #
1	MAINE	BPI-0068

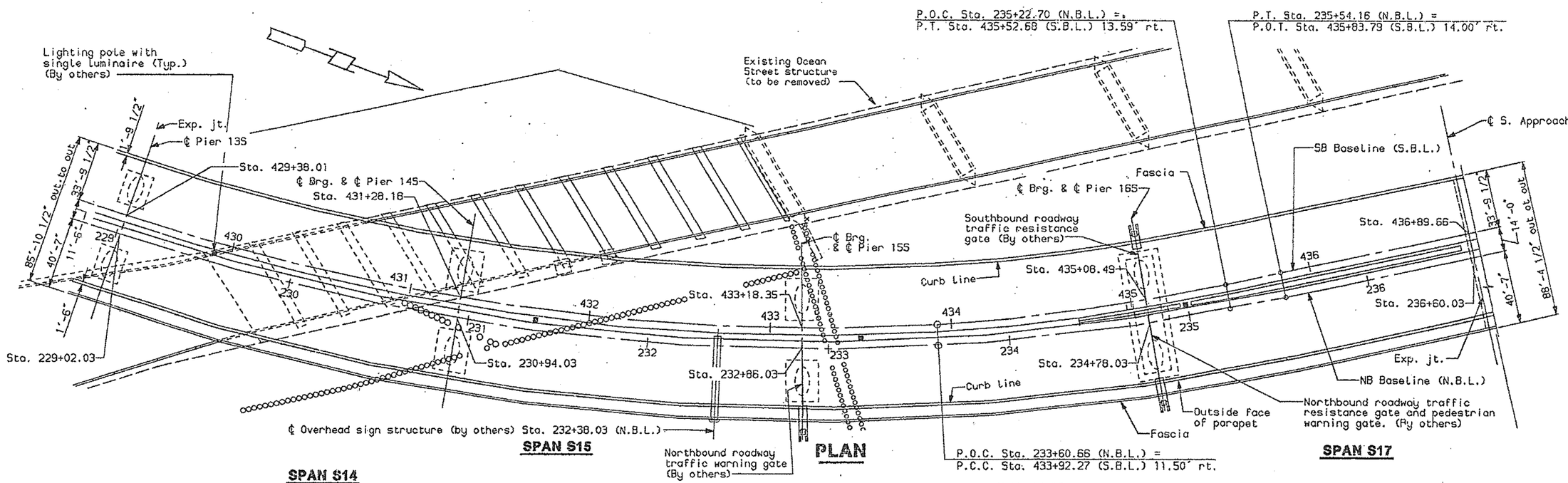

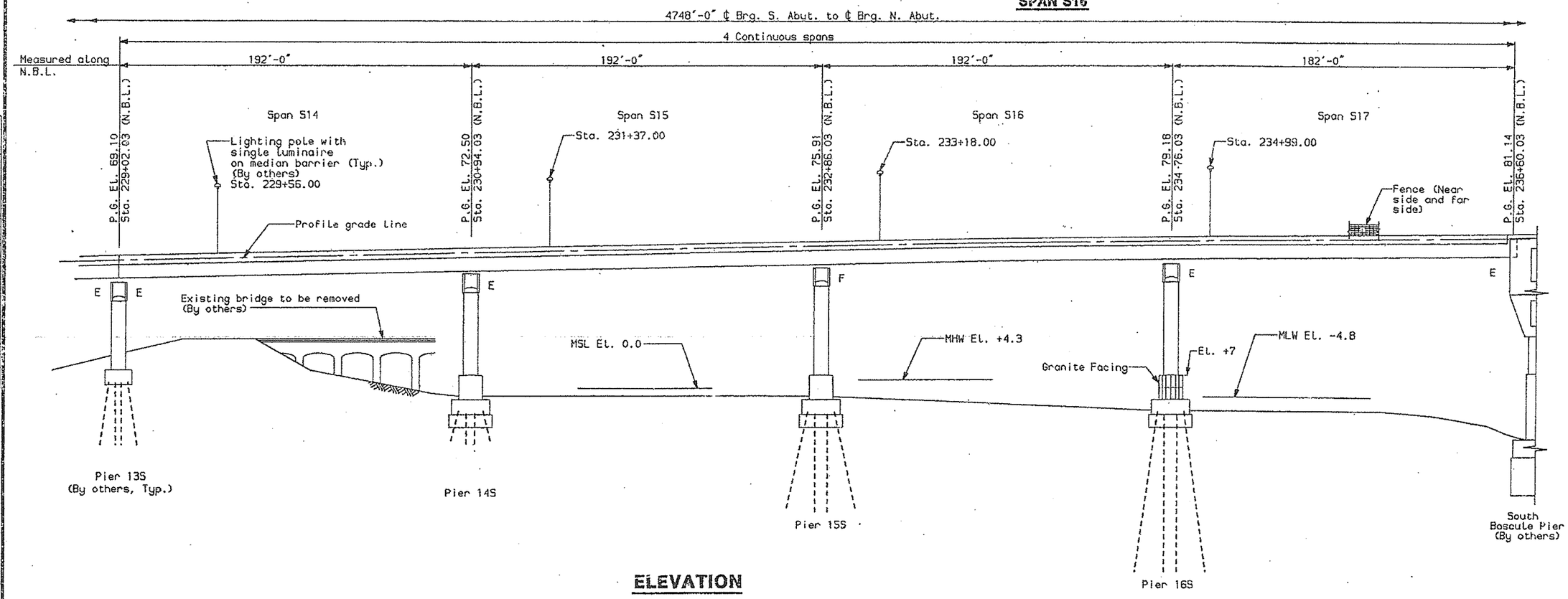

Design-DETAILED	MCI	ELS	8-24
CHECKED	PDR		5-94
REVISION			
FIELD CHANGES			

PLANS

4-18-94

pesa.5

SOUTH APPROACH S

STATE OF MAINE
DEPARTMENT OF TRANSPOR

PORTLAND - S. PORTLA
OVER FORE RIV
CUMBERLAND CO

SOUTH APPRO
PLAN & ELEVATI

SHEET 10 OF 182 AUGUSTA, MA

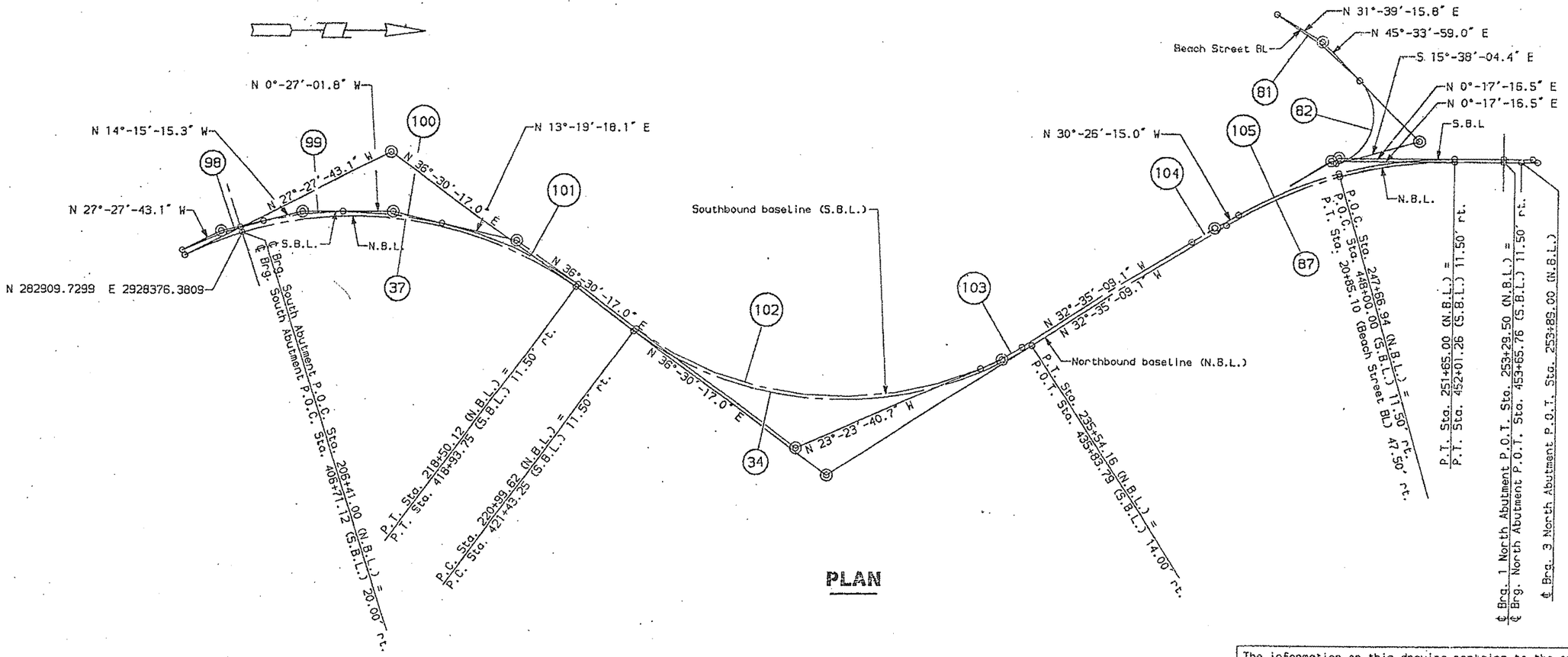

PLAN

The information on this drawing pertains to the overall Portland-South Portland Bridge project. This South Approach contract includes the construction of seventeen mainline northbound and southbound superstructure spans extending from the south abutment to the south bascule pier.

Pull wires shall be provided with all electrical conduits installed with this contract.

All sidewalk and roadway fencing for the north and south approaches, including posts, fence fabric, gates, and other details shown on the plans shall be provided and installed as part of this contract.

Curve No. 37 (N.B.L.)
P.I. Sta. 212+23.73 (Ahd.)
Δ = 63°-58'-00.2" Rt.
Dc = 4°-30'-00.0"
R = 1273.2396'
T = 795.09'
Lc = 1421.48'
E = 227.86'
SE = 0.038 ft./ft.
P.C.C. Sta. 204+28.64
P.T. Sta. 218+50.12

Curve No. 34 (N.B.L.)
P.I. Sta. 229+30.04 (Ahd.)
Δ = 69°-05'-26.1" Lt.
Dc = 4°-45'-00.0"
R = 1206.2269'
T = 830.42'
Lc = 1454.54'
E = 258.21'
SE = 0.039 ft./ft.
P.C. Sta. 220+99.62
P.T. Sta. 235+54.16

Curve No. 87 (N.B.L.)
P.I. Sta. 247+65.74 (Ahd.)
Δ = 32°-52'-25.6" Rt.
Dc = 4°-00'-00.0"
R = 1432.3945'
T = 422.58'
Lc = 821.84'
E = 61.03'
SE = 0.037 ft./ft.
P.C. Sta. 243+43.16
P.T. Sta. 251+65.00

Curve No. 81 (Beach Street BL)
P.I. Sta. 15+41.05 (Ahd.)
Δ = 13°-54'-43.1" Rt.
Dc = 3°-49'-11.0"
R = 1500.00'
T = 183.01'
Lc = 364.21'
E = 11.12'
SE = 0.023 ft./ft.
P.C. Sta. 13+58.04
P.C.C. Sta. 17+22.25

Curve No. 82 (Beach Street BL)
P.I. Sta. 20+18.15 (Ahd.)
Δ = 118°-47'-56.6" Rt.
Dc = 32°-44'-25.7"
R = 175.00'
T = 295.90'
Lc = 362.85'
E = 168.78'
SE = 0.04 ft./ft.
P.C.C. Sta. 17+22.25
P.T. Sta. 20+85.10

Curve No. 98 (S.B.L.)
P.I. Sta. 406+05.14 (Ahd.)
Δ = 13°-12'-27.8" Rt.
Dc = 4°-25'-49.4"
R = 1293.2423'
T = 149.72'
Lc = 298.12'
E = 8.64'
SE = 0.038 ft./ft.
P.C.C. Sta. 404+55.42
P.C.C. Sta. 407+53.54

Curve No. 99 (S.B.L.)
P.I. Sta. 408+92.25 (Ahd.)
Δ = 13°-48'-13.5" Rt.
Dc = 5°-00'-00.0"
R = 1145.9097'
T = 138.71'
Lc = 276.07'
E = 8.36'
SE = 0.039 ft./ft.
P.C.C. Sta. 407+53.54
P.C.C. Sta. 410+29.61

Curve No. 100 (S.B.L.)
P.I. Sta. 412+02.60 (Ahd.)
Δ = 13°-46'-19.9" Rt.
Dc = 4°-00'-00.0"
R = 1432.4031'
T = 172.99'
Lc = 344.31'
E = 10.41'
SE = 0.037 ft./ft.
P.C.C. Sta. 410+29.61
P.C.C. Sta. 413+73.92

Curve No. 101 (S.B.L.)
P.I. Sta. 416+37.44 (Ahd.)
Δ = 23°-10'-58.9" Rt.
Dc = 4°-27'-35.0"
R = 1284.7334'
T = 263.52'
Lc = 519.83'
E = 26.75'
SE = 0.038 ft./ft.
P.C.C. Sta. 413+73.92
P.T. Sta. 418+93.75

Curve No. 102 (S.B.L.)
P.I. Sta. 428+31.63 (Ahd.)
Δ = 59°-53'-57.7" Lt.
Dc = 4°-47'-44.6"
R = 1194.7270'
T = 688.38'
Lc = 1249.02'
E = 184.13'
SE = 0.039 ft./ft.
P.C. Sta. 421+43.25
P.C.C. Sta. 433+92.27

Curve No. 103 (S.B.L.)
P.I. Sta. 434+72.65 (Ahd.)
Δ = 9°-11'-28.4" Lt.
Dc = 5°-43'-46.5"
R = 1000.0000'
T = 80.38'
Lc = 160.42'
E = 3.23'
SE = 0.039 ft./ft.
P.C.C. Sta. 433+92.27
P.T. Sta. 435+52.68

Curve No. 104 (S.B.L.)
P.I. Sta. 443+33.23 (Ahd.)
Δ = 2°-08'-54.1" Rt.
Dc = 1°-08'-45.3"
R = 4999.9844'
T = 93.75'
Lc = 187.48'
E = 0.88'
SE = 0.037 ft./ft.
P.C. Sta. 442+39.48
P.C.C. Sta. 444+26.96

Curve No. 105 (S.B.L.)
P.I. Sta. 448+23.66 (Ahd.)
Δ = 30°-43'-31.5" Rt.
Dc = 3°-58'-05.3"
R = 1443.8945'
T = 396.70'
Lc = 774.30'
E = 53.50'
SE = 0.037 ft./ft.
P.C.C. Sta. 444+26.96
P.T. Sta. 452+01.26

NOTES:

(37) Indicates curve numb

Coordinates are referenced t
State Coordinate Grid, North
of 1983.

SOUTH APPROACH

STATE OF MAINE
DEPARTMENT OF TRANSPO

PORTLAND - S. PORTLA
OVER FORE RIV
CUMBERLAND CO

KEY GEOME

SHEET 11 OF 182 AUGUSTA, MA

REG. NO.	DATE	
1	MAINE	DPI-00

DESIGN-DETAILED	MCI	EAR	6-94
CHECKED	PDB		6-94
REVISION			
FIELD CHANGES			

PLANS

4-18-94
sa.keygeo

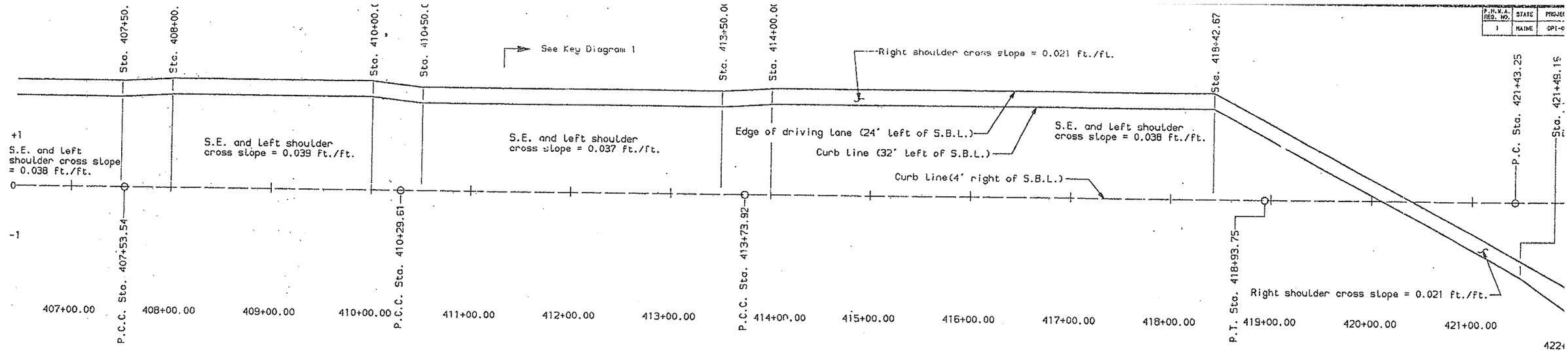

SUPERELEVATION DIAGRAM SOUTHBOUND BASELINE (S.B.L.)

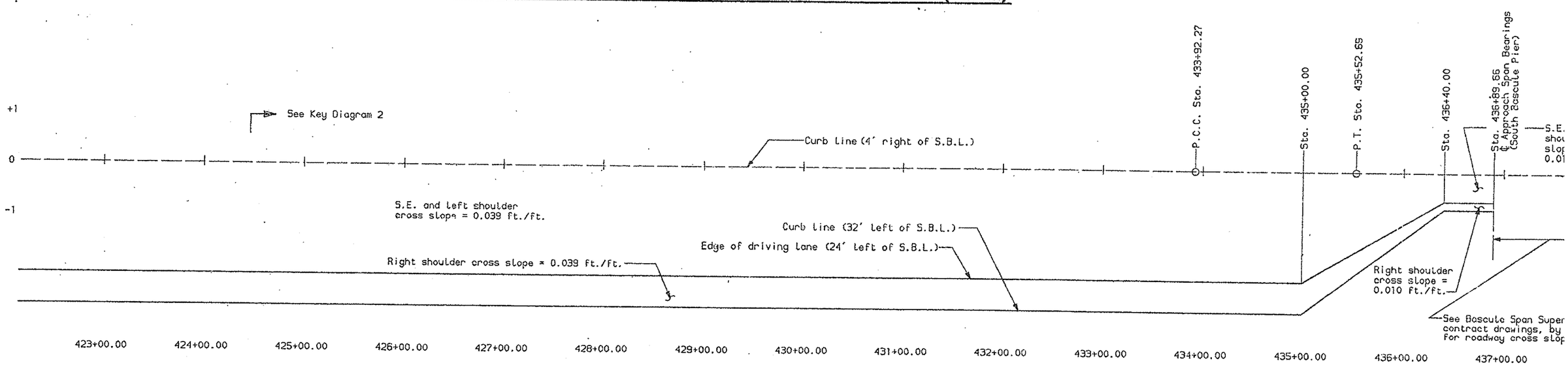

SUPERELEVATION DIAGRAM SOUTHBOUND BASELINE (S.B.L.)

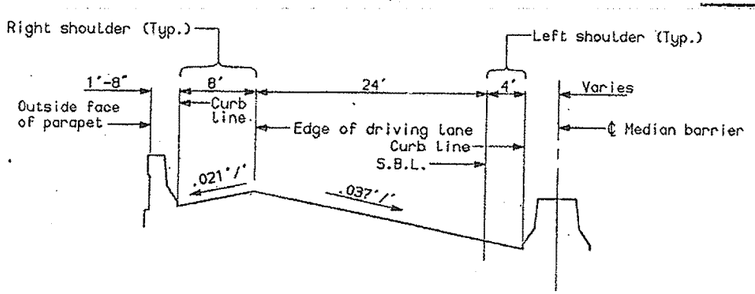

KEY DIAGRAM 1
(Looking Ahead Sta.)

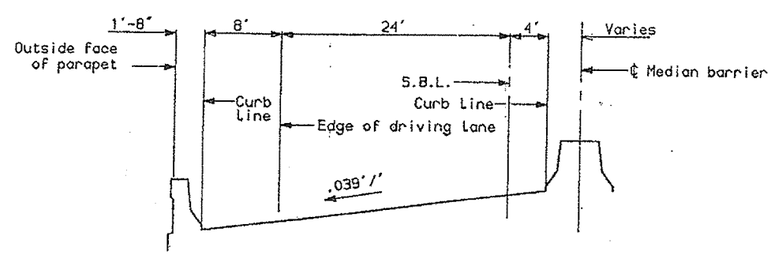

KEY DIAGRAM 2
(Looking Ahead Sta.)

P.R.W.A. REG. NO.	STATE	PROJEC
1	MAINE	OPI-0

DESIGN-DETAILED	MCI	6-94
CHECKED	PDB	6-94
REVISION	ELS	6-94
FIELD CHANGES		

PLANS

sa. mose. sb

SOUTH APPROACH
STATE OF MAINE
DEPARTMENT OF TRANSPO

PORTLAND - S. PORTLA
OVER FORE RIV
CUMBERLAND CO

SOUTHBOUND BA
METHOD OF SUPEREL

SHEET 12 OF 182 AUGUSTA, MAI

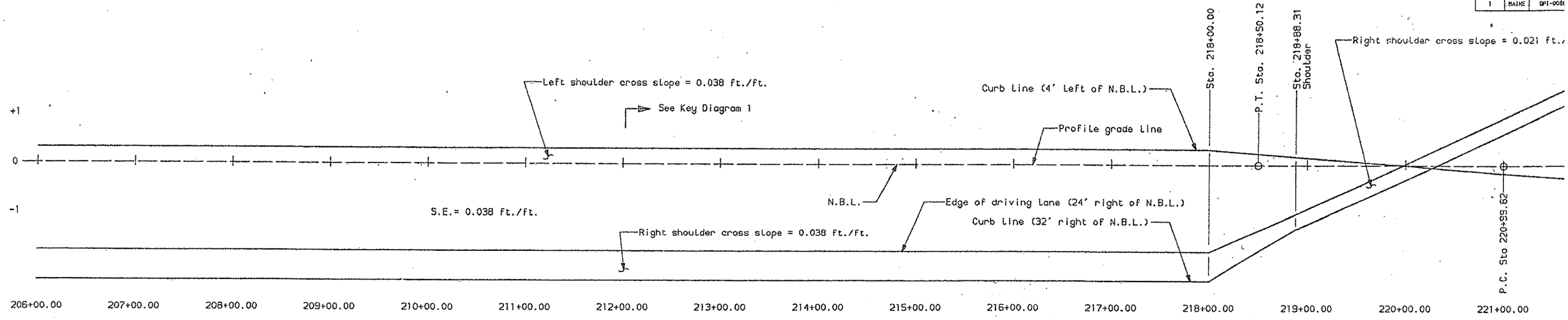

SUPERELEVATION DIAGRAM NORTHBOUND BASELINE (N.B.L.)

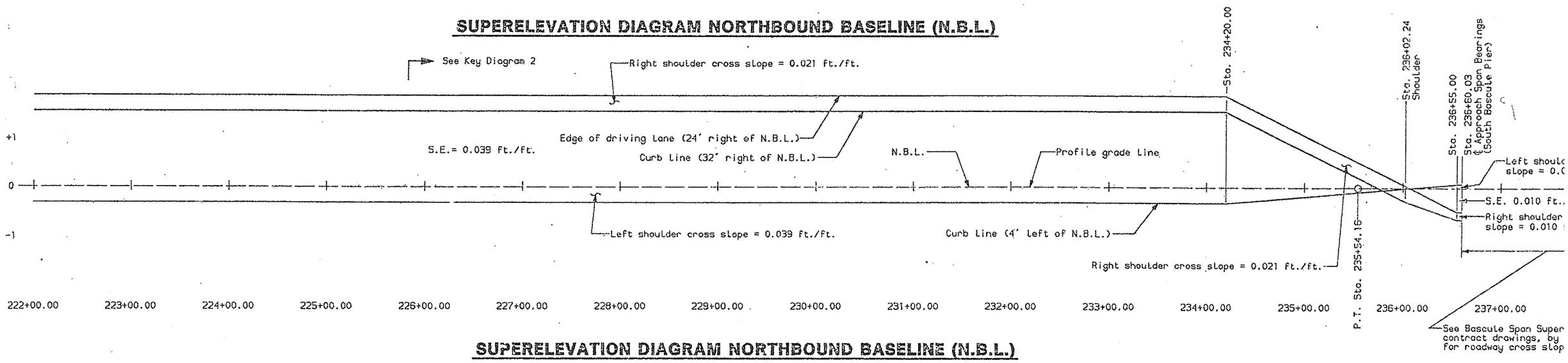

SUPERELEVATION DIAGRAM NORTHBOUND BASELINE (N.B.L.)

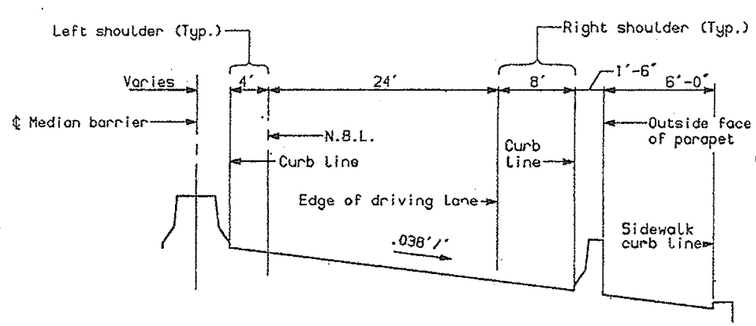

KEY DIAGRAM 1
(Looking Ahead Sta.)

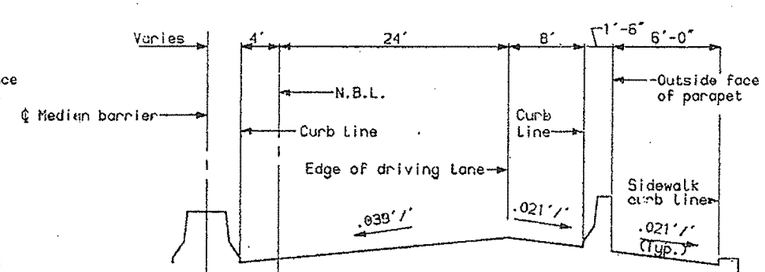

KEY DIAGRAM 2
(Looking Ahead Sta.)

F.H.W.A. REG. NO.	STATE	PROJECT
1	MAINE	DPI-008

PLANS

DESIGN-DETAILED	MCI	ELS	6-94
CHECKED	PDB		6-94
REVISION			
FIELD CHANGES			

sc.mose.nb

SOUTH APPROACH

STATE OF MAINE
DEPARTMENT OF TRANSPO

PORTLAND - S. PORTLA
OVER FORE RIV
CUMBERLAND CO

NORTHBOUND BA
METHOD OF SUPERE

SHEET 13 OF 182 AUGUSTA, MA

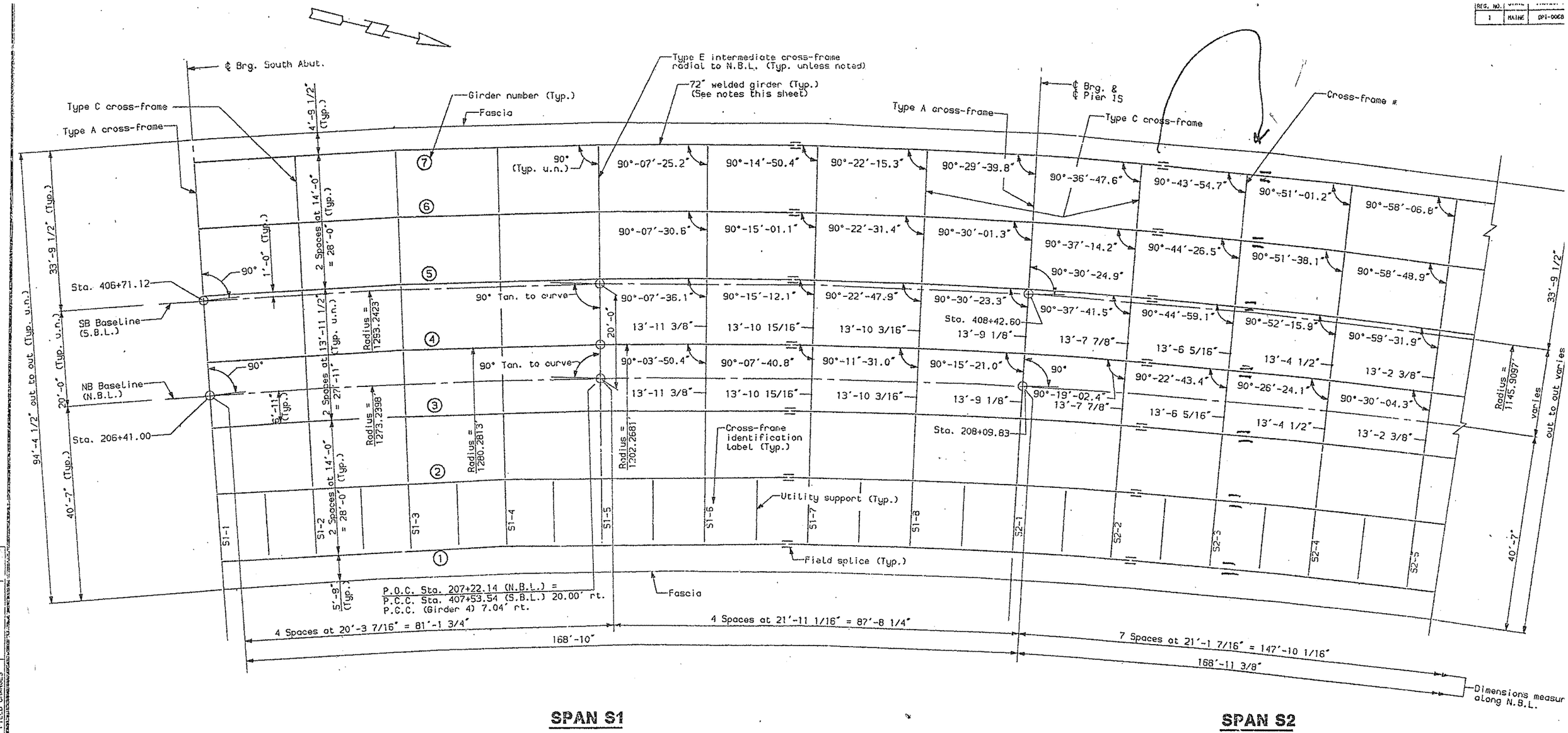

*At Locations marked with an asterisk (*) the designated cross-frames shall be changed to type CF1 cross-frames as required to accommodate the contractor's deck placement sequence. No extra compensation will be allowed for any cross-frames so substituted, and any additional costs will be considered incidental to the contract items.

NOTES:

Girders 1, 2 & 3 are concentric to the NB Baseline.
Girder 4 has independent geometry.
Girders 5, 6 & 7 are concentric to the SB Baseline.

REG. NO.	STATE	PROJECT
1	MAINE	DPI-0008

DESIGN-DETAILED	DMP	6-94
CHECKED	PDB	6-94
REVISION		
FIELD CHANGES		

PLANS

4-13-94
fr.s1s4-1

SOUTH APPROACH

STATE OF MAINE
DEPARTMENT OF TRANSPO

PORTLAND - S. PORTLA
OVER FORE RIV
CUMBERLAND CO

FRAMING PL
SPANS S1-S4

SHEET 14 OF 182 AUGUSTA, MA

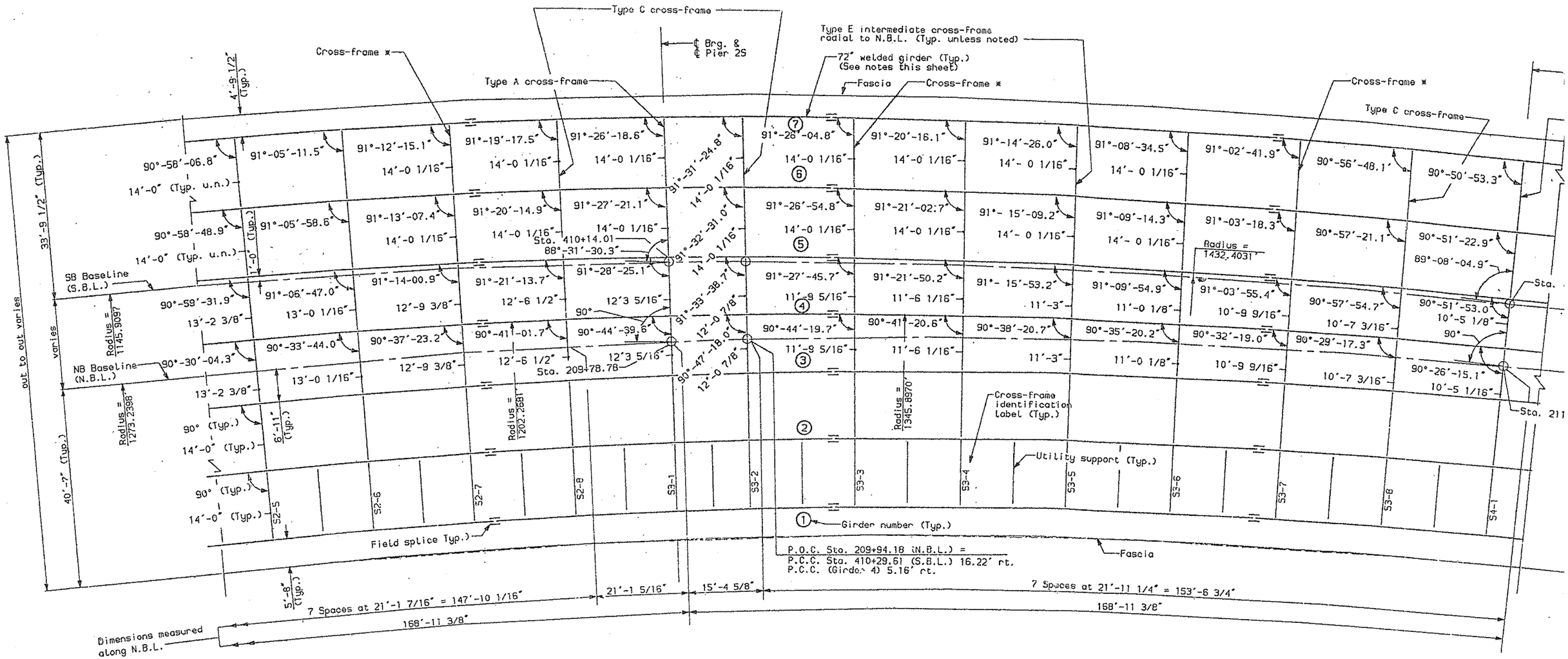

NOTES:

*At locations marked with an asterisk (*) the designated cross-frames shall be changed to type CF1 cross-frames as required to accommodate the contractor's deck placement sequence. No extra compensation will be allowed for any cross-frames so substituted, and any additional costs will be considered incidental to the contract items.

Girders 1, 2 & 3 are concentric to the NB Baseline.
Girder 4 has independent geometry.
Girders 5, 6 & 7 are concentric to the SB Baseline.

F.A.P. NO.	STATE	PROJE
1	MAINE	DPI-

SOUTH APPROACH

STATE OF MAINE
DEPARTMENT OF TRANSP

PORTLAND - S. PORTL
OVER FORE RI
CUMBERLAND CO

FRAMING PL
SPANS S1-S4

SHEET 15 OF 182 AUGUSTA, MA

DESIGN-DETAILED	DWP	EAR
CHECKED	PDB	
REVISION		6-94
FIELD CHANGE?		

PLANS

4-13-94
fn.s1s4-2

F.H.W.A. REG. NO.	STATE	PROJECT
1	MAINE	DPI-006

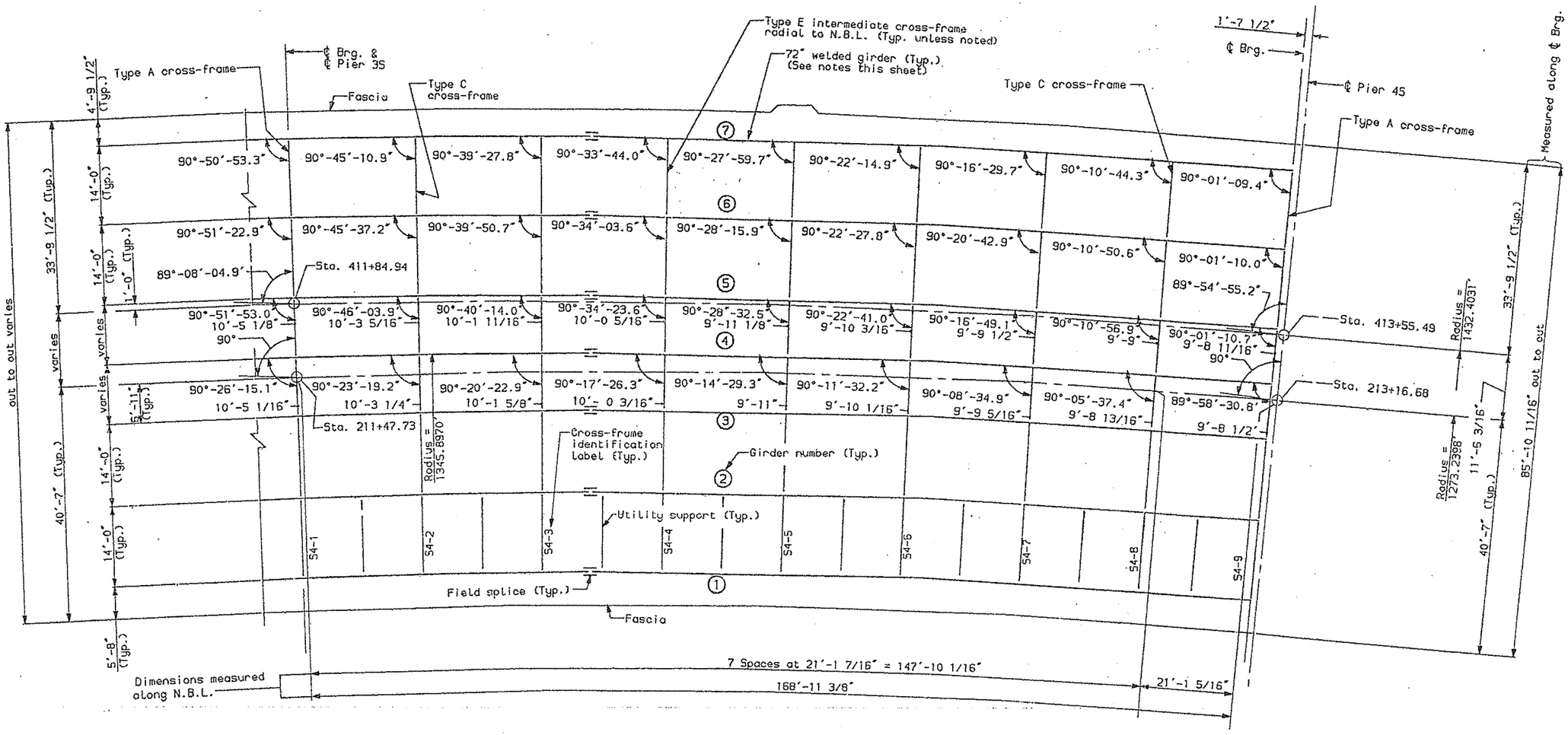

SPAN S3

SPAN S4

NOTES:

Girders 1, 2 & 3 are concentric to the NB Baseline.
Girder 4 has independent geometry.
Girders 5, 6 & 7 are concentric to the SB Baseline.

SOUTH APPROACH

STATE OF MAINE
DEPARTMENT OF TRANSPOR

PORTLAND - S. PORTLA
OVER FORE RIV
CUMBERLAND CO

FRAMING PL
SPANS S1-S4

SHEET 16 OF 182 AUGUSTA, MAI

PLANS

DESIGN-DETAILED	DWP	EAR	6-94
CHECKED	PDB		6-94
REVISION			
FIELD CHANGES			

4-13-94
Fr.s1s4-3

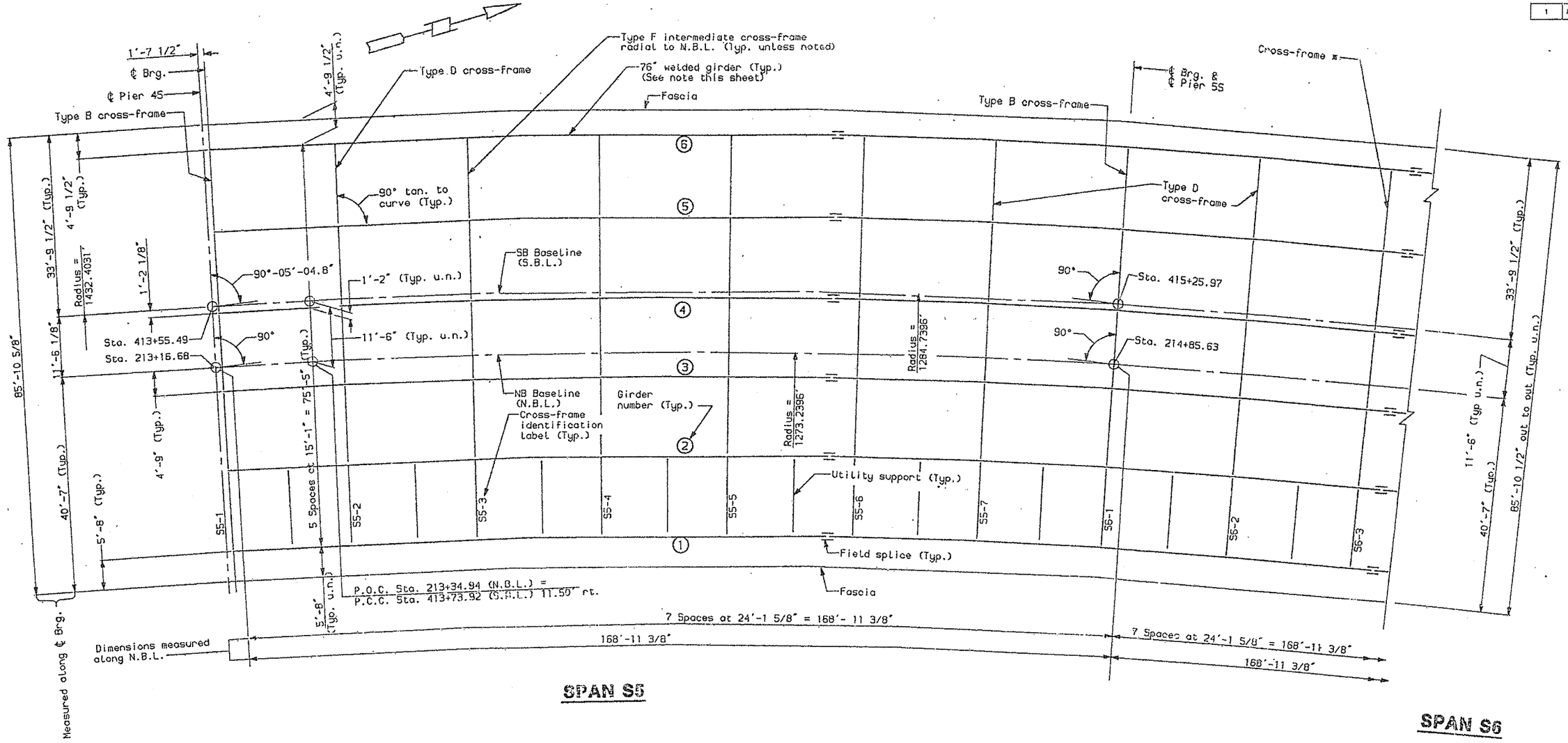

NOTE:

All girders are concentric to NB Baseline.

*At locations marked with an asterisk (*) the designated cross-frames shall be changed to type CF1 cross-frames as required to accommodate the contractor's deck placement sequence. No extra compensation will be allowed for any cross-frames so substituted, and any additional costs will be considered incidental to the contract items.

DESIGN-DETAILED	DWP	EAR	5-94
CHECKED	POB		6-94
REVISION			
FIELD CHANGES			

PLANS

4-13-94
fr. s5s9-1

SOUTH APPROACH

STATE OF MAINE
DEPARTMENT OF TRANSPO

PORTLAND - S. PORTLA
OVER FORE RIV
CUMBERLAND CO

FRAMING PL
SPANS S5-S

SHEET 17 OF 182 AUGUSTA, MA

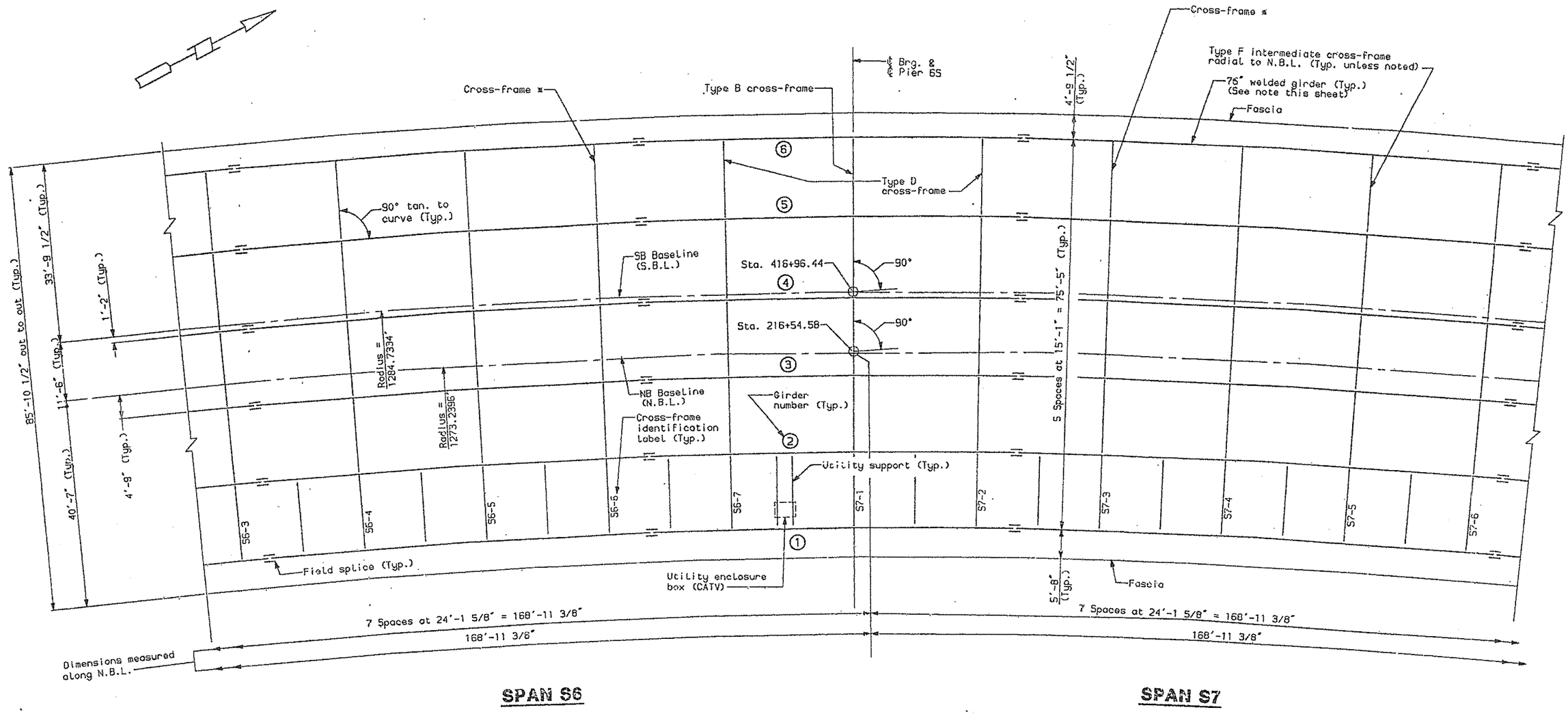

NOTE:

All girders are concentric to NB Baseline.

*At locations marked with an asterisk (*) the designated cross-frames shall be changed to type CF1 cross-frames as required to accommodate the contractor's deck placement sequence. No extra compensation will be allowed for any cross-frames so substituted, and any additional costs will be considered incidental to the contract items.

DESIGN-DETAILED	DWP	EAR	6-94
CHECKED	PDB		6-94
REVISION			
FIELD CHANGES			

PLANS

4-13-94

fr.s5s9-2

SOUTH APPROACH

STATE OF MAIN
DEPARTMENT OF TRANSP

PORTLAND - S. PORTL
OVER FORE RI
CUMBERLAND C

FRAMING P
SPANS S5-S

SHEET 18 OF 182 AUGUSTA, M

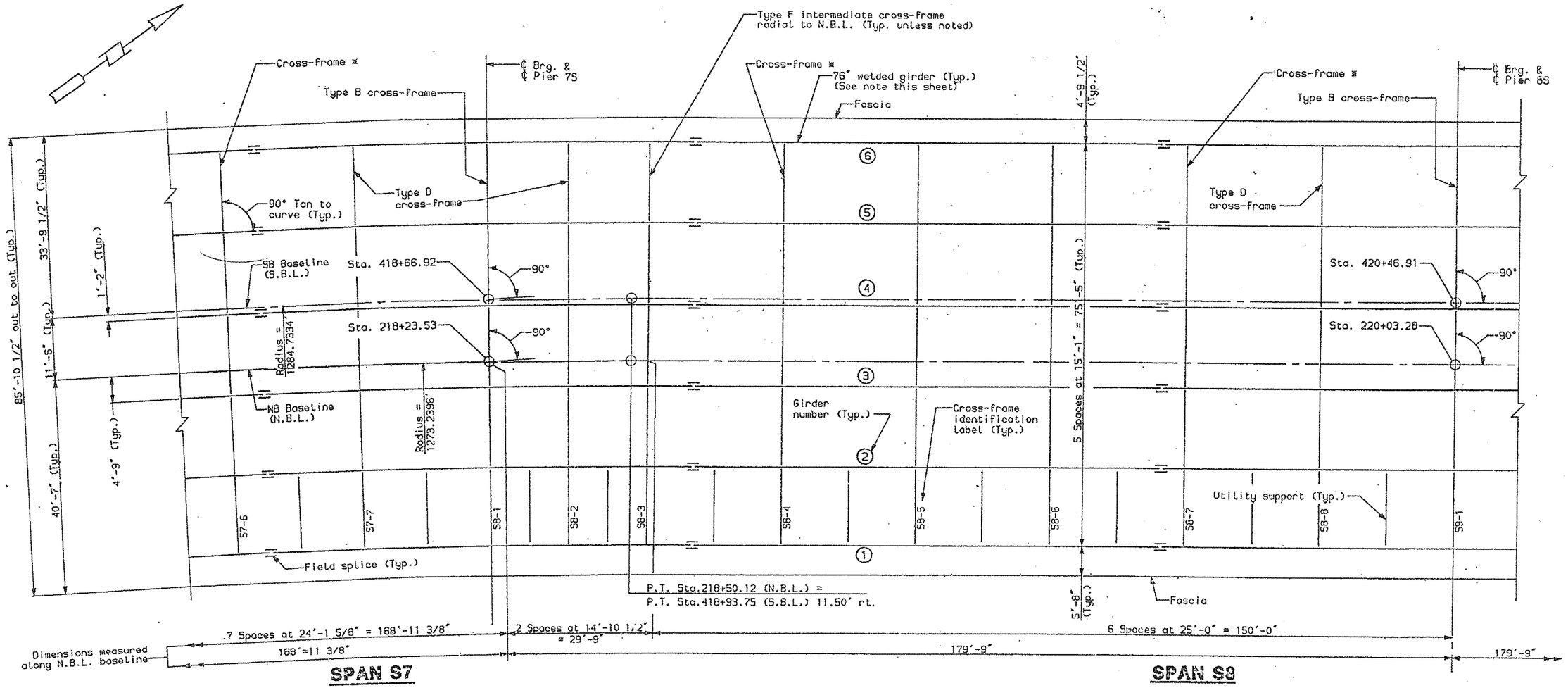

NOTE:

All girders are concentric to NB Baseline.

*At locations marked with an asterisk (*) the designated cross-frames shall be changed to type CF2 cross-frames as required to accommodate the contractor's deck placement sequence. No extra compensation will be allowed for any cross-frames so substituted, and any additional costs will be considered incidental to the contract items.

F.H.W.A. REG. NO.	STATE	PROJE
1	MAINE	DPI-

DESIGN-DETAILED	DWP	EAR	6-94
CHECKED	PDB		6-94
REVISION			
FIELD CHANGES			

PLANS

4-13-94
fr.s5s9-3

SOUTH APPROACH
STATE OF MAIN
DEPARTMENT OF TRANSP

PORTLAND - S. PORTL
OVER FORE RI
CUMBERLAND C

FRAMING P
SPANS S5-S

SHEET 19 OF 182 AUGUSTA, M

REG. NO.	STATE	PROJECT NO.
1	MAINE	DPI-0060

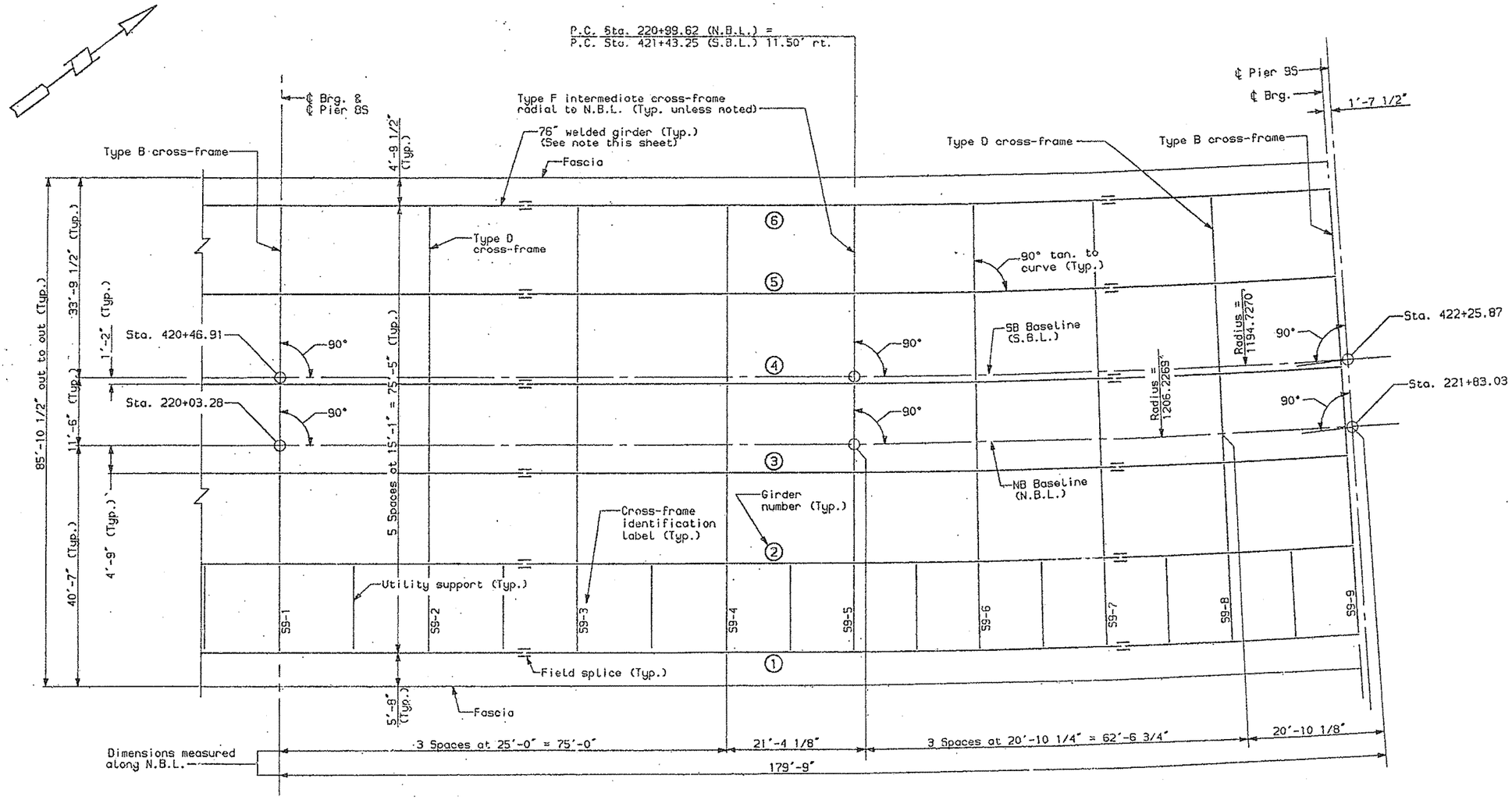

SPAN S8 **SPAN S9**

NOTE:

All girders are concentric to NB Baseline.

DESIGN-DETAILED	DMP	EAR	6-94
CHECKED	POB		6-94
REVISION			
FIELD CHANGES			

PLANS

4-13-94
Fr. s5s9-4

SOUTH APPROACH

STATE OF MAINE
DEPARTMENT OF TRANSPO

PORTLAND - S. PORTLA
OVER FORE RIV
CUMBERLAND CO

FRAMING PL
SPANS S5-S9

SHEET 20 OF 182 AUGUSTA, MA

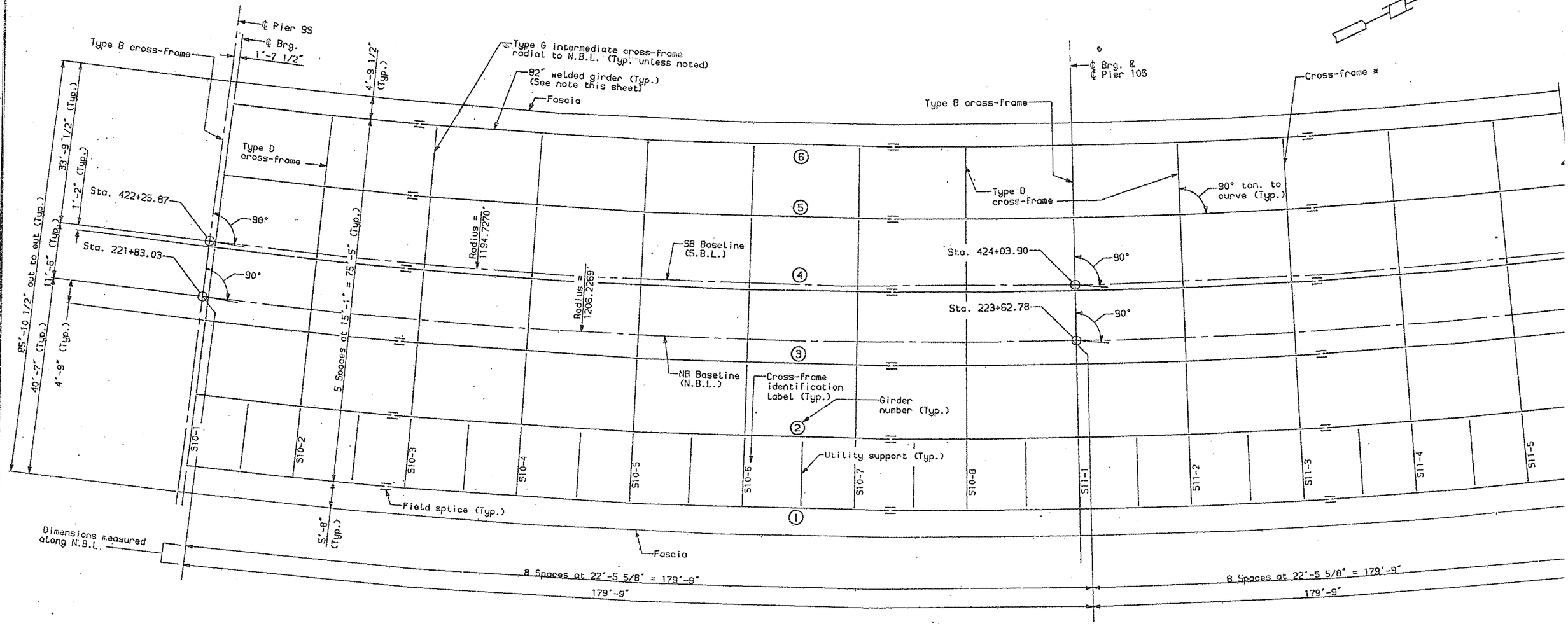

SPAN S10

SPAN S11

NOTE:

All girders are concentric to NB Baseline.

*At locations marked with an asterisk (*) the designated cross-frames shall be changed to type CF3 cross-frames as required to accommodate the contractor's deck placement sequence. No extra compensation will be allowed for any cross-frames so substituted, and any additional costs will be considered incidental to the contract items.

REV. NO.		
1	MAINE	DPI-0

DESIGN-DETAILED	DWP	EAR	6-94
CHECKED	PDB		6-94
REVISION			
FIELD CHANGES			

PLANS

4-13-94
Fr.s10s13-1

SOUTH APPROACH

STATE OF MAINE
DEPARTMENT OF TRANSPO

PORTLAND - S. PORTLA
OVER FORE RIV
CUMBERLAND CO

FRAMING PL
SPANS S10-S1

SHEET 21 OF 182 AUGUSTA, MA

REG. NO.	STATE	PROJECT
1	MAINE	DPI-000

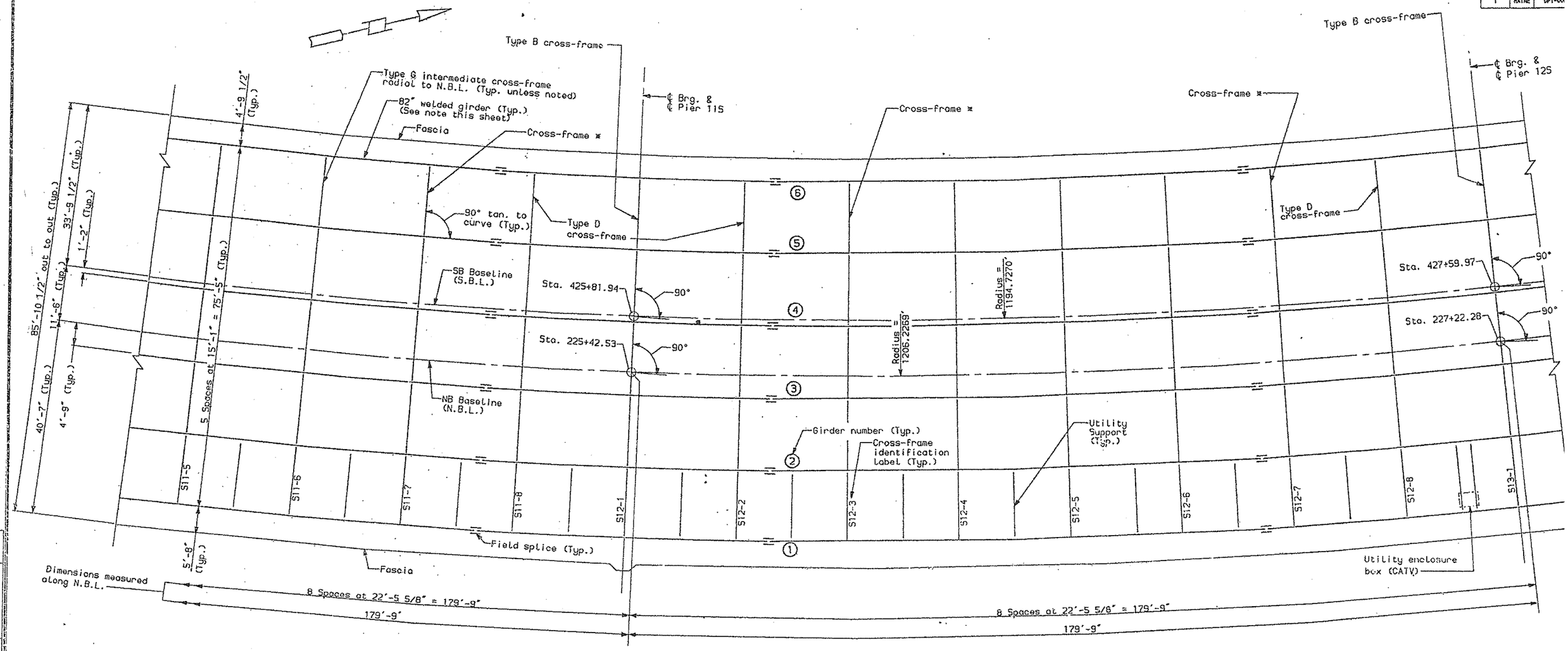

SPAN S11 **SPAN S12** **SI**

NOTE:

All girders are concentric to NB Baseline.

*At locations marked with an asterisk (*) the designated cross-frames shall be changed to type CF3 cross-frames as required to accommodate the contractor's deck placement sequence. No extra compensation will be allowed for any cross-frames so substituted, and any additional costs will be considered incidental to the contract items.

DESIGN-DETAILED	DKP	EAR	6-94
CHECKED	POB		6-94
REVISION			
FIELD CHANGES			

PLANS

4-13-94
fr.s10s13-2

SOUTH APPROACH

STATE OF MAINE
DEPARTMENT OF TRANSPO

PORTLAND - S. PORTLA
OVER FORE RI
CUMBERLAND CO

FRAMING PL
SPANS S10-S1

SHEET 22 OF 182 AUGUSTA, MA

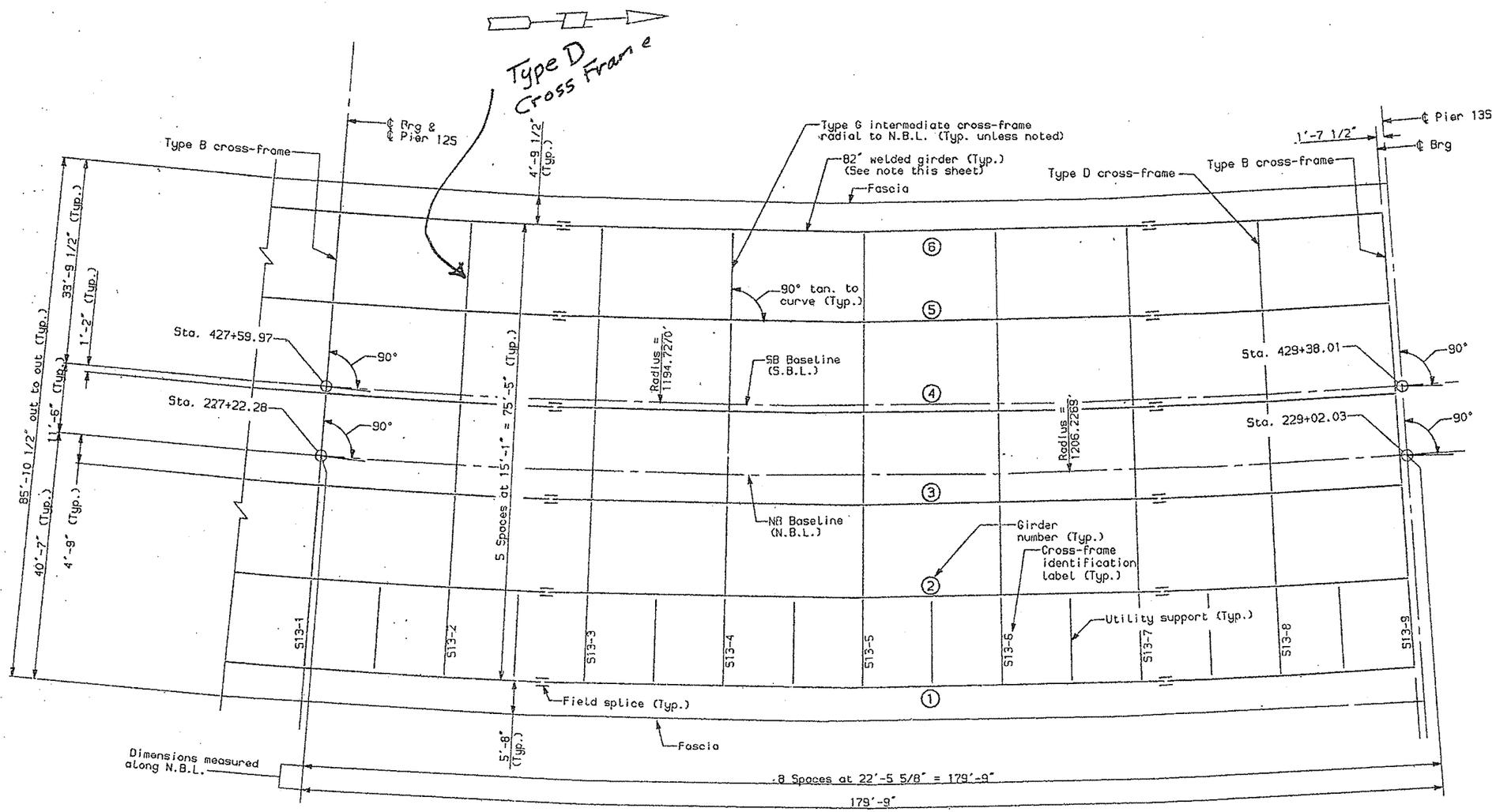

SPAN S12 **SPAN S13**

NOTE:

All girders are concentric to NB Baseline.

REG. NO.		
1	MAINE	DPI-(

DESIGN ENGINEER	dY	DATE
DESIGN-DETAILED	DMP	EAR	6-94
CHECKED	POB	6-94
REVISION		
FIELD CHANGES		

PLANS

4-13-94
Fr.s10s13-3

SOUTH APPROAC

STATE OF MAI
DEPARTMENT OF TRANS

PORTLAND - S. PORTI
OVER FORE R
CUMBERLAND C

FRAMING P
SPANS S10-S

SHEET 23 OF 182 AUGUSTA,

F.H.W.A. REG. NO.	STATE	PROJECT
1	MAINE	BR-014

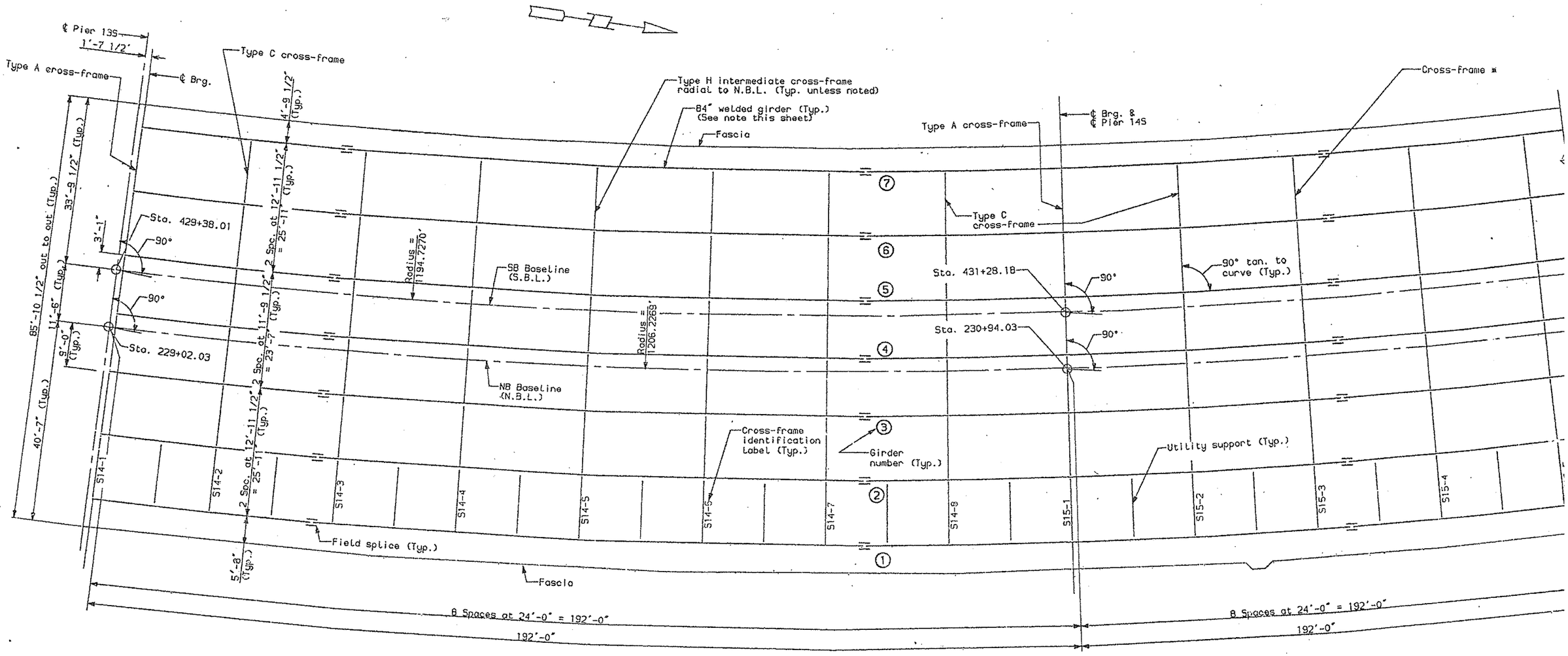

SPAN S14

SPAN S15

NOTE:

All girders are concentric to NB Baseline.

*At locations marked with an asterisk (*) the designated cross-frames shall be changed to type CF4 cross-frames as required to accommodate the contractor's deck placement sequence. No extra compensation will be allowed for any cross-frames so substituted, and any additional costs will be considered incidental to the contract items.

DESIGN-DETAILED	DWP	EAR	6-94
CHECKED	PDB		6-94
REVISION			
FIELD CHANGES			

PLANS

4-13-94
Fr.s14s17-1

SOUTH APPROACH

STATE OF MAINE
DEPARTMENT OF TRANSPO

PORTLAND - S. PORTLA
OVER FORE RIV
CUMBERLAND CO

FRAMING PL
SPANS S14-S1

SHEET 24 OF 182 AUGUSTA, MA

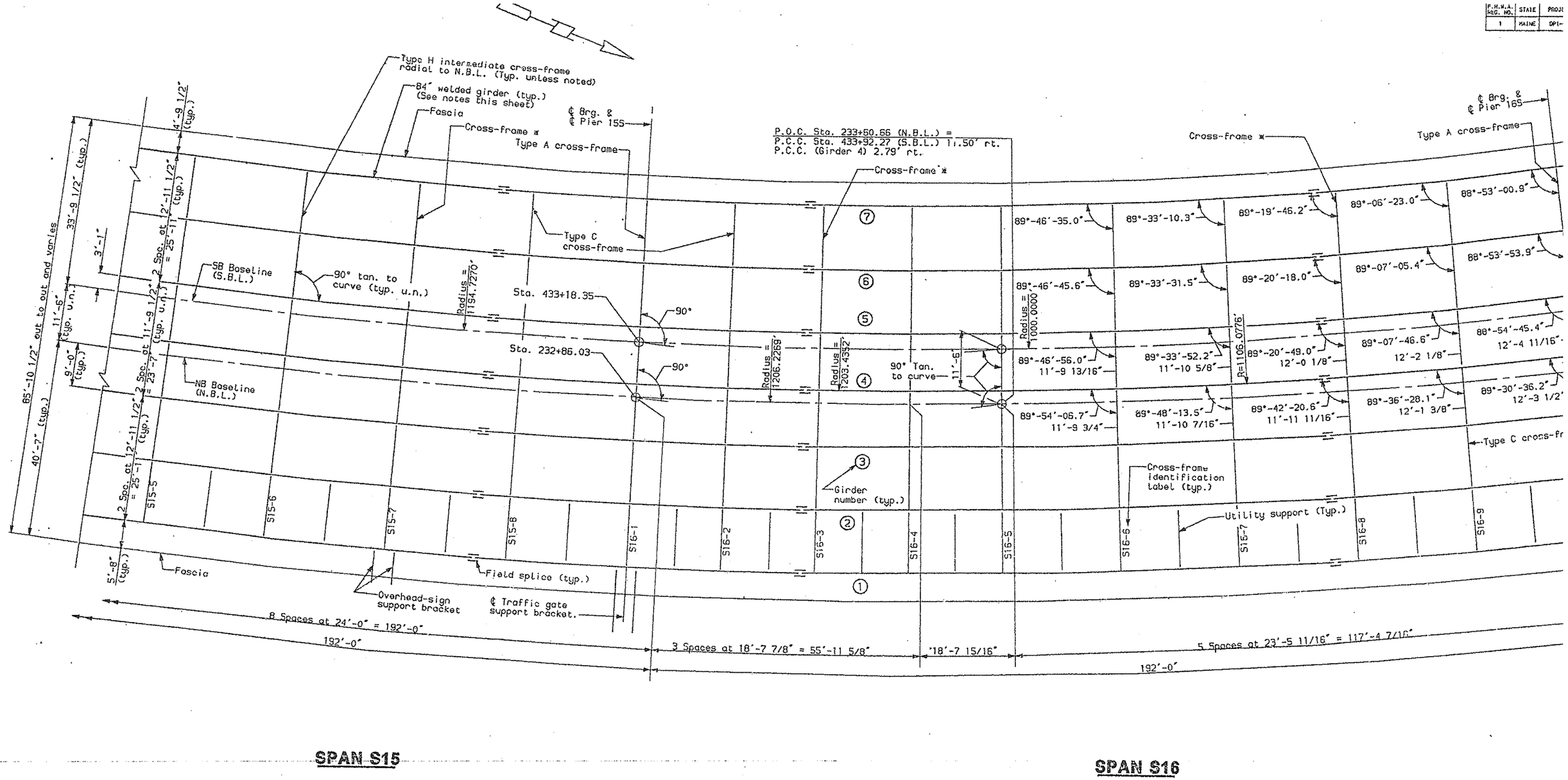

*At locations marked with an asterisk (*) the designated cross-frames shall be changed to type CF4 cross-frames as required to accommodate the contractor's deck placement sequence. No extra compensation will be allowed for any cross-frames so substituted, and any additional costs will be considered incidental to the contract items.

NOTES:

Girders 1, 2 & 3 are concentric to the NB Baseline.
Girder 4 has independent geometry.
Girders 5, 6 & 7 are concentric to the SB Baseline.

F.H.W.A. REG. NO.	STATE	PROJ
1	MAINE	DPI-

DESIGN-DETAILED	DWP	LAR 6-94
CHECKED	PDB	6-94
REVISION		
FIELD CHANGES		

PLANS

4-13-94
Fr.s14s17-2

SOUTH APPROACH

STATE OF MAINE
DEPARTMENT OF TRANSPO

PORTLAND - S. PORTLA
OVER FORE RI
CUMBERLAND CO

FRAMING PL
SPANS S14-S1

SHEET 25 OF 182 AUGUSTA, MA

F.H.W.A. REG. NO.	STATE	PROJEC
1	MAINE	DPI-0

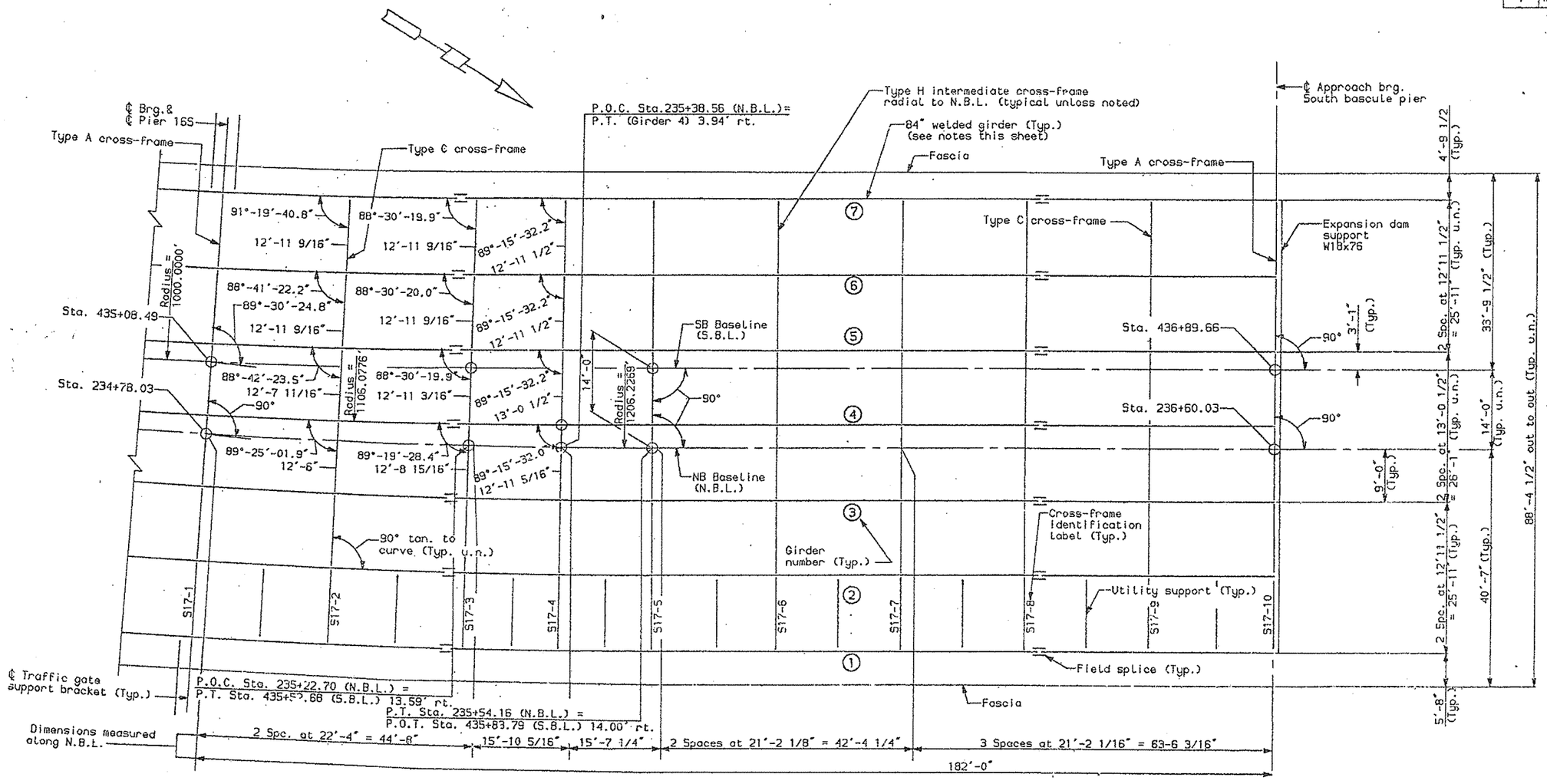

SPAN S16 **SPAN S17**

NOTES:

Girders 1, 2 & 3 are concentric to the NB Baseline.
Girder 4 has independent geometry.
Girders 5, 6 & 7 are concentric to the SB Baseline.

DESIGN-DETAILED	DWP	EAR	6-94
CHECKED			
REVISION			
FIELD CHANGES			

PLANS

4-13-94
Fr.s14s17-3

SOUTH APPROACH
STATE OF MAIN
DEPARTMENT OF TRANSP

PORTLAND - S. PORTL
OVER FORE RI
CUMBERLAND C

FRAMING P
SPANS S14-S

SHEET 26 OF 182 AUGUSTA, M

F.H.W.A. REG. NO.	STATE	PROJECT
1	MAINE	BRI-006

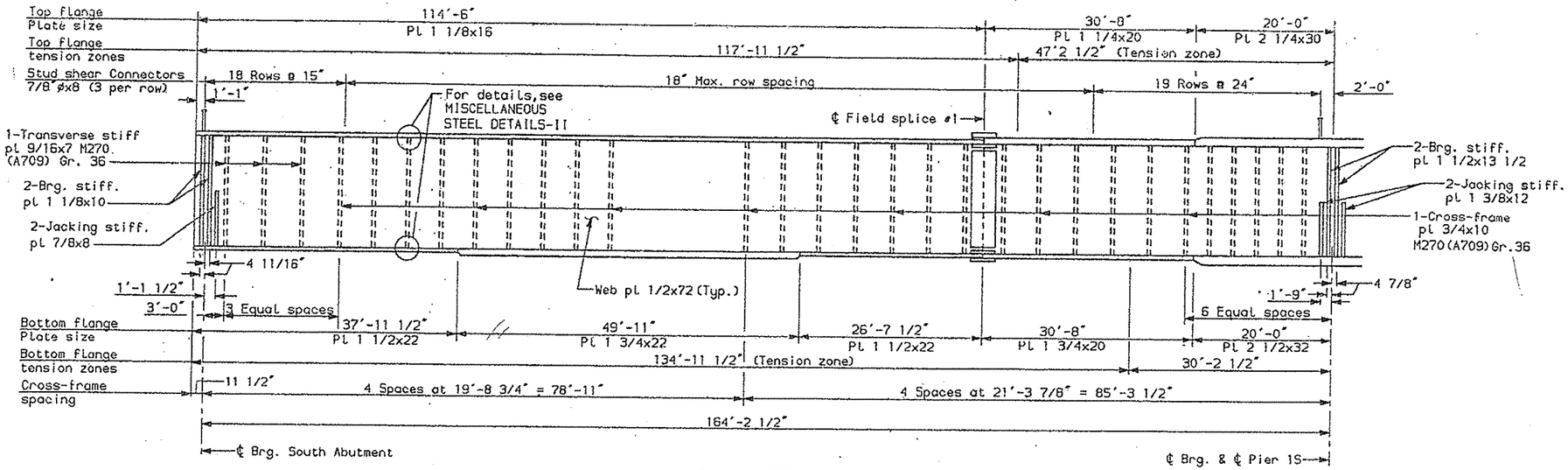

SPAN S1

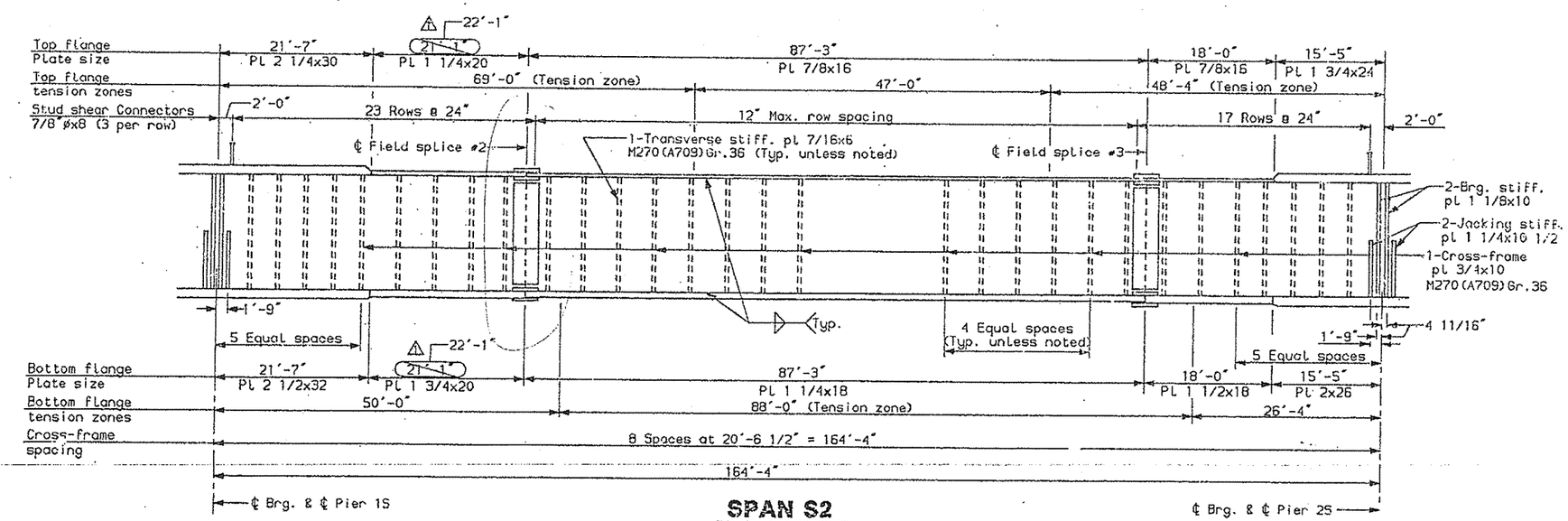

SPAN S2

NOTES:

Utility supports not shown.

Materials

Structural steel : AASHTO M270 (ASTM A709), Gr. 50,
AASHTO M270 (ASTM A709), Gr. 36,
& AASHTO M183 (ASTM A36)

Basic Design Stresses

Structural Steel: Fy = 50000 psi and Fy = 36000 psi

Structural Metalwork and Bolted Connections

Provide structural steel conforming to AASHTO M270 (ASTM A709), Gr. 5 except when noted otherwise.

Heat curving in accordance with Supplemental Specifications Section 5 or flame cutting of flange plates for curved girders will be permitte

Filler plates may be AASHTO M270 (ASTM A709), grade 36 steel and mill tests for filler plate material will not be required.

Bearing stiffeners shall be plumb after erection and dead load deflection of the structure.

Intermediate web stiffeners or intermediate cross-frame connection plates shall be normal to the top flange, unless otherwise shown on the plans.

The bearing details are shown for normal temperature of 45° F.. No separate payment will be made for resetting bearings to the final position if adjustments are required.

All fasteners are 7/8-inch diameter AASHTO M164 (ASTM A325) high strength bolts, except as noted.

Bolted connections are designed as slip-critical joints with all faying surfaces having a Class B slip coefficient.

Welding

No transverse butt-weld splices will be allowed in the flange plates plates within 10 feet or 10 percent of the span length (whichever is from the points of maximum positive moment or maximum negative moment otherwise shown on the plans.

Butt-weld splices in flanges shall be not less than three feet from t butt-welds in the web plates and no transverse web or flange butt-wel located within three feet from transverse welds (e.g. connection plat welds) on either flange or web, unless otherwise shown on the plans.

Sections of flange plates or web plates between transverse shop splic between a transverse shop splice and a field splice shall be not less feet in length, unless otherwise shown on the plans.

Notch toughness requirements, as specified in Table S1.2 of AASHTO In Specifications for Transportation Materials and Methods of Sampling A Part I - Interim Specifications (1992) are mandatory for all main lo members. For the purpose of this specification, main load-carrying me be those parts of the structure carrying calculated stresses, includi flanges of welded plate girders, rolled shapes used as girders, floor stringers, all components of cross-frames including girder web connec and girder bearing stiffeners, and all splice material for the listed other than filler plates.

⚠ Revised per Addendum No. 4.

DATE	CHECKED	REVISION	
6-94	7DB	MCI	FIELD CHANGES
10-94			

DWP

PLANS

S1S4.ele1a

SOUTH APPROACH

STATE OF MAINE
DEPARTMENT OF TRANSPOR

PORTLAND - S. PORTLA
OVER FORE RIV
CUMBERLAND CO

ELEVATION GIR
SPANS S1-S4

SHEET 27 OF 182 AUGUSTA, MA

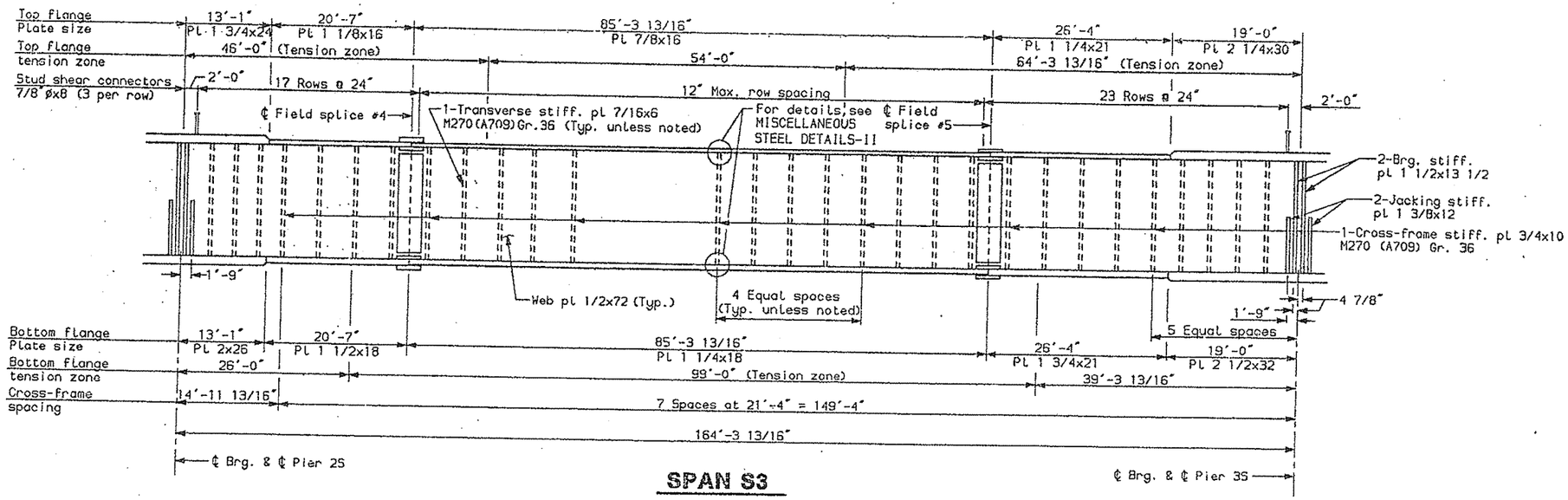

SPAN S3

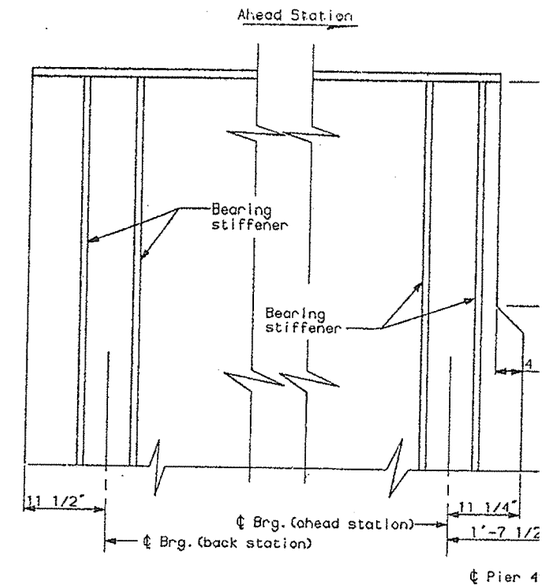

End of Girder Details

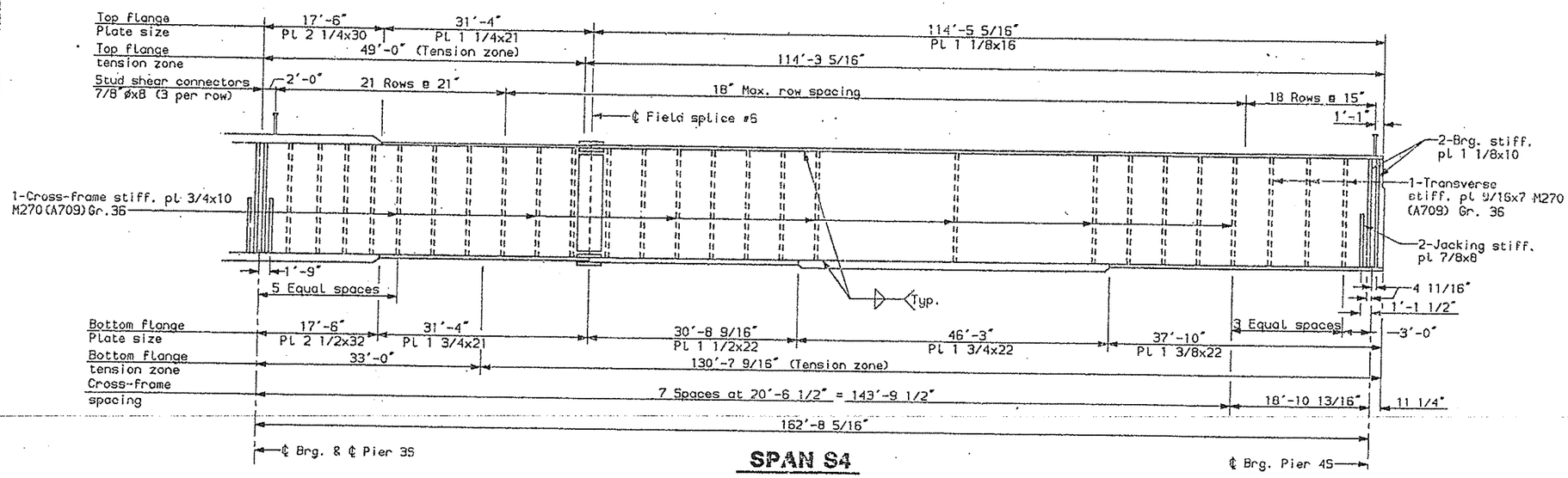

SPAN S4

NOTES:

Utility supports not shown.

TABLE OF UNFACTORED REACTIONS (kips)

		South Abutment	Pier 1S	Pier 2S	Pier 3S	Pier 4S
DL+SDL		194	647	489	643	185
LL	(Max.)	65	146	136	146	61
	(Min.)	-20	-36	-49	-39	-18
Total	(Max.)	259	793	625	789	246
	(Min.)	171	611	440	604	167

TABLE OF FACTORED MAXIMUM MOMENTS (ft.-kips)

	Span S1 Positive Moment	Pier 1S Negative Moment	Span S2 Positive Moment	Pier 2S Negative Moment	Span S3 Positive Moment	Pier 3S Negative Moment	Span S4 Positive Moment
DL	5528	-10800	2136	-6052	2248	-10811	5140
SDL	2274	-4191	940	-2835	1022	-4157	2230
LL+I (Positive)	6090	2108	4986	2916	4927	2145	5952
LL+I (Negative)	-2702	-7791	-3296	-6818	-3248	-7683	-2793
Total (Pos.LL+I)	13892	-12883	8062	-5971	8197	-12823	13322
Total (Neg.LL+I)	5100	-22782	-220	-15705	22	-22651	4577

TABLE OF FACTORED MAXIMUM SHEARS (kips)

	Span S1 Left	Span S1 Right	Span S2 Left	Span S2 Right	Span S3 Left	Span S3 Right	Span S4 Left	Span S4 Right
DL+SDL	252	-445	394	-319	319	-394	438	-224
LL+I (Positive)	165	46	221	61	240	48	249	46
LL+I (Negative)	-50	-243	-46	-240	-61	-221	-48	-154
Total (Pos.LL+I)	417	-399	615	-258	559	-346	687	-178
Total (Neg.LL+I)	202	-688	348	-559	258	-615	390	-378

REVISION	CHECKED	DATE
FIELD CHANGES	PDB	6-94

PLANS

SOUTH APPROACH S

STATE OF MAINE
DEPARTMENT OF TRANSPORT

PORTLAND - S. PORTLAN
OVER FORE RIVE
CUMBERLAND COU

ELEVATION GIRD
SPANS S1-S4 -

REG. NO.	STATE	PROJECT
1	MAINE	OPI-00

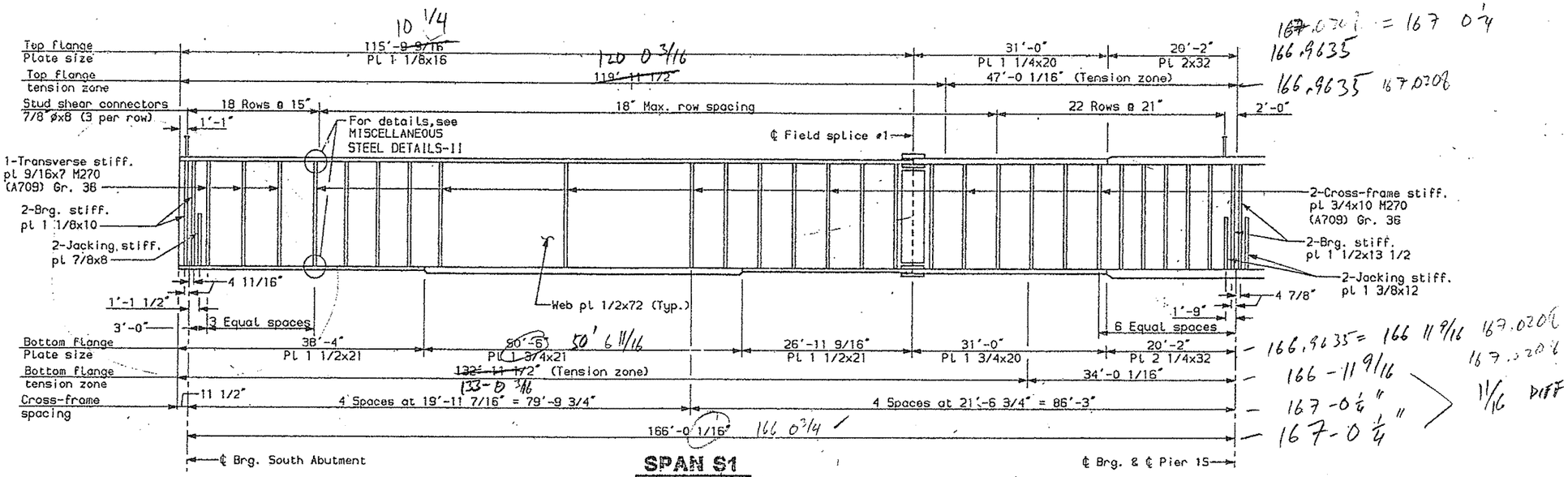

SPAN S1

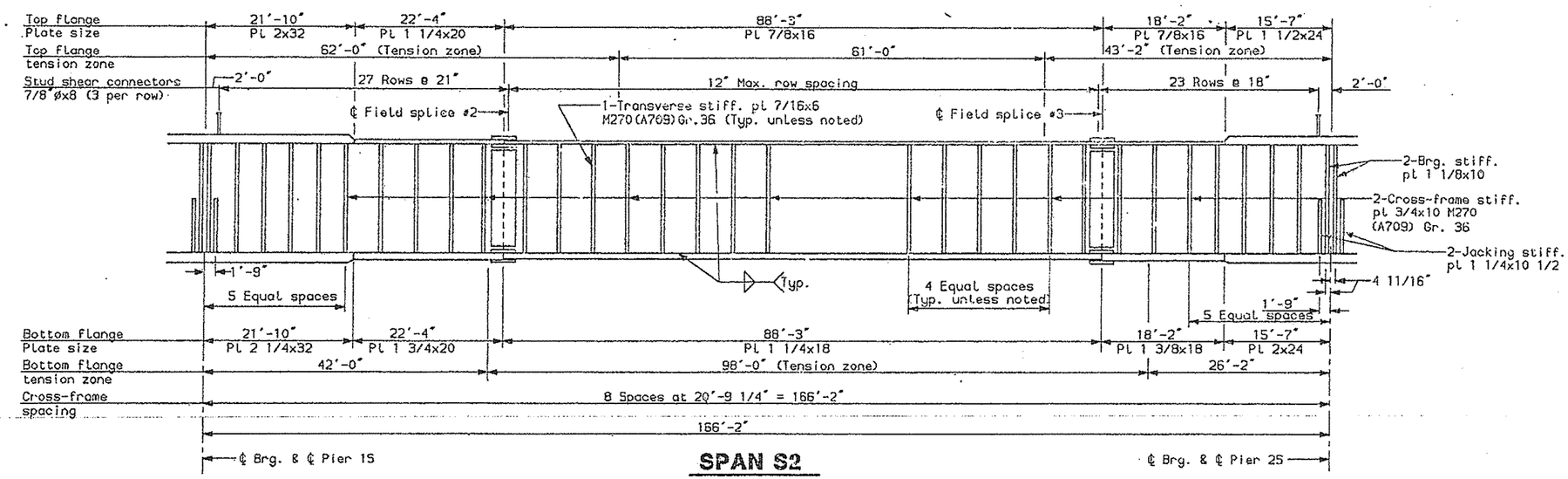

SPAN S2

NOTES:

Utility and threaded bar supports no

DESIGN-DETAILED	DWP	ELS	6-94
CHECKED	PDB		6-94
REVISION			
FIELD CHANGES			

PLANS

s1s4.ns2a

SOUTH APPROACH

STATE OF MAIN
DEPARTMENT OF TRANSP

PORTLAND - S. PORTL
OVER FORE RI
CUMBERLAND C

ELEVATION GI
SPANS S1-S

SHEET 29 OF 182 AUGUSTA, MA

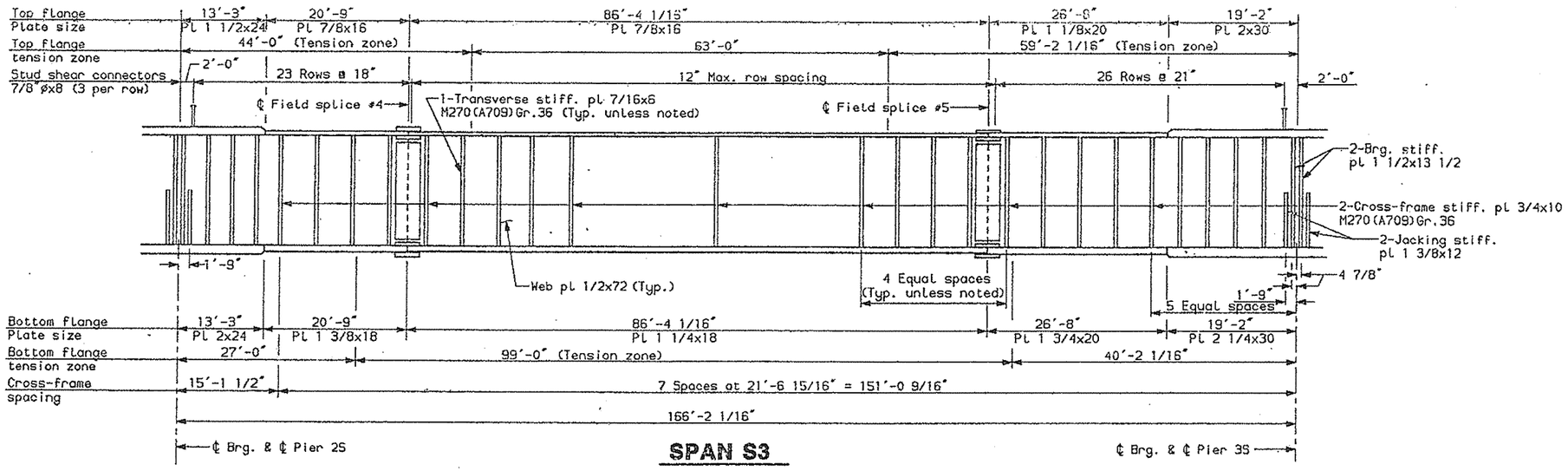

SPAN S3

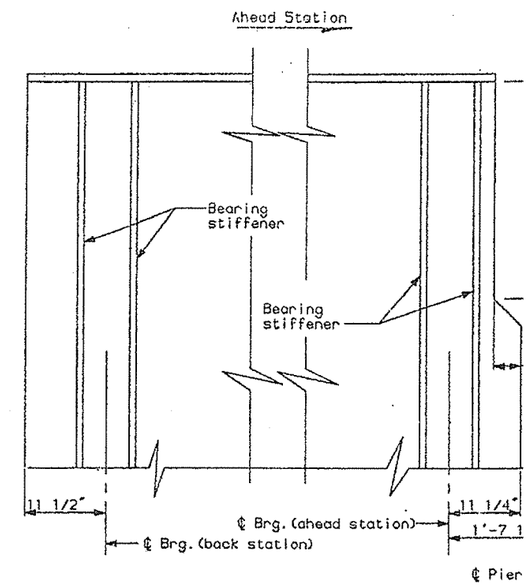

End of Girder Details

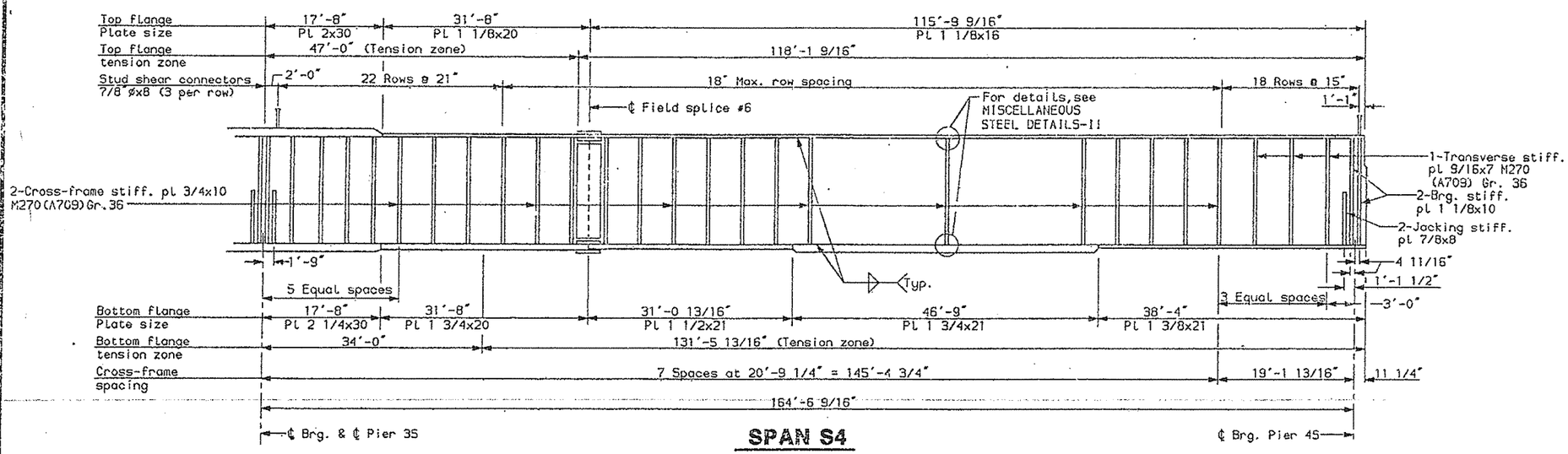

SPAN S4

NOTES:

Utility and threaded bar supports not shown

TABLE OF UNFACTORED REACTIONS (kips)						
		South Abutment	Pier 1S	Pier 2S	Pier 3S	Pier 4S
DL+SDL		189	585	431	551	182
LL	(Max.)	84	164	155	159	84
	(Min.)	-8	-16	-28	-15	-8
Total	(Max.)	273	749	586	710	266
	(Min.)	181	569	403	536	174

TABLE OF FACTORED MAXIMUM MOMENTS (ft.-kips)							
	Span S1 Positive Moment	Pier 1S Negative Moment	Span S2 Positive Moment	Pier 2S Negative Moment	Span S3 Positive Moment	Pier 3S Negative Moment	Span S4 Positive Moment
DL	5677	-10972	2166	-5868	2276	-10145	5346
SDL	2183	-3619	870	-2140	887	-3409	2109
LL+I (Positive)	5386	1094	4169	1885	4130	1031	5107
LL+I (Negative)	-1569	-7234	-2275	-6058	-2182	-6682	-1430
Total (Pos.LL+I)	13246	-13497	7205	-6123	7293	-12523	12562
Total (Neg.LL+I)	6291	-21825	761	-14066	981	-20236	6025

TABLE OF FACTORED MAXIMUM SHEARS (kips)								
	Span S1 Left	Span S1 Right	Span S2 Left	Span S2 Right	Span S3 Left	Span S3 Right	Span S4 Left	Span S4 Right
DL+SDL	244	-403	352	-280	281	-333	373	-270
LL+I (Positive)	212	20	258	35	273	17	269	20
LL+I (Negative)	-20	-277	-20	-271	-35	-249	-17	-212
Total (Pos.LL+I)	556	-383	610	-245	554	-316	642	-250
Total (Neg.LL+I)	224	-680	332	-551	246	-582	356	-482

REG. NO.	STATE	
1	MAINE	001-0

DESIGN-DETAILED	DWP	ELS
CHECKED	PDB	
REVISION		
FIELD CHANGES		

PLANS

s1s4.es2b

SOUTH APPROACH

STATE OF MAIN
DEPARTMENT OF TRANSP

PORTLAND - S. PORTL
OVER FORE R
CUMBERLAND C

ELEVATION GI
SPANS S1-S

SHEET 30 OF 182 AUGUSTA, M

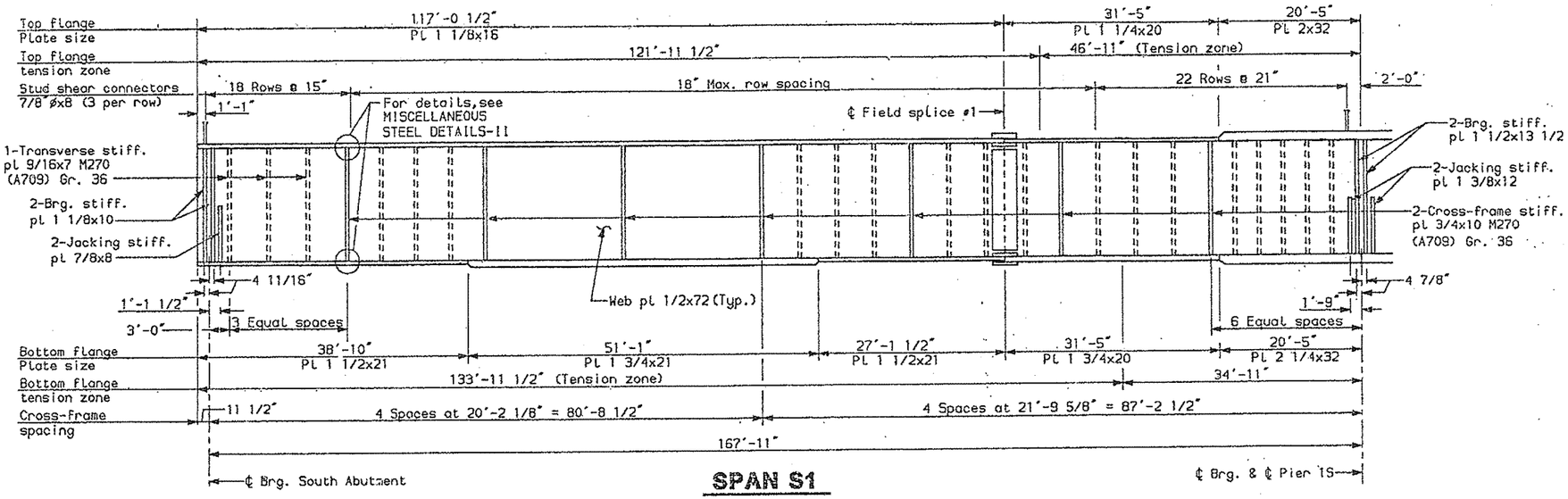

SPAN S1

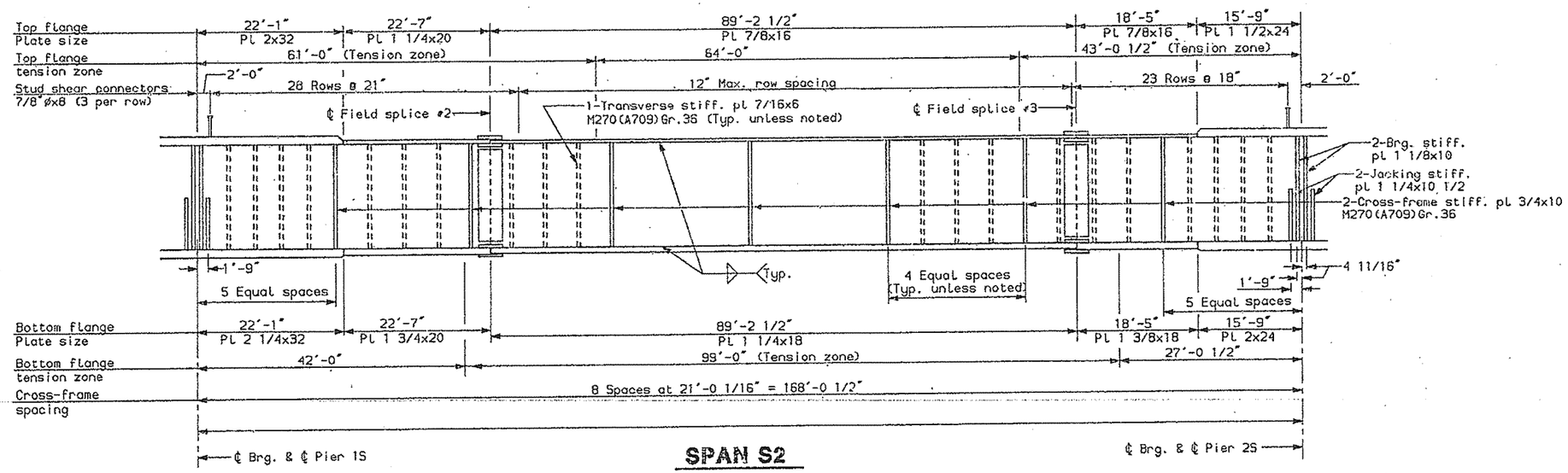

SPAN S2

NOTES:

Threaded bar supports not sl

PROJECT DESIGN ENGINEER		BY	DATE
DESIGN-DETAILED	DWP	ELS	5-94
CHECKED	PDB		6-94
REVISION			
FIELD CHANGES			

PLANS

SOUTH APPROACH

STATE OF MAIN
DEPARTMENT OF TRANSP

PORTLAND - S. PORTL
OVER FORE R
CUMBERLAND C

ELEVATION GI
SPANS S1-S

SHEET 31 OF 182 AUGUSTA, M

s1s4.ss3a

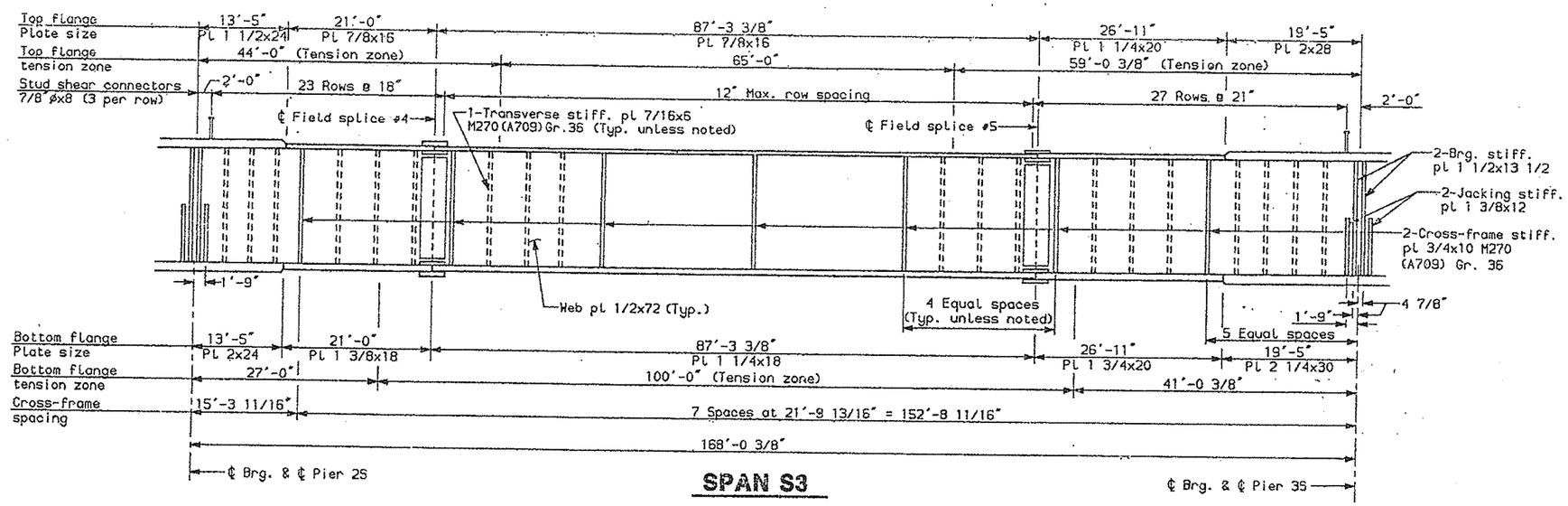

SPAN S3

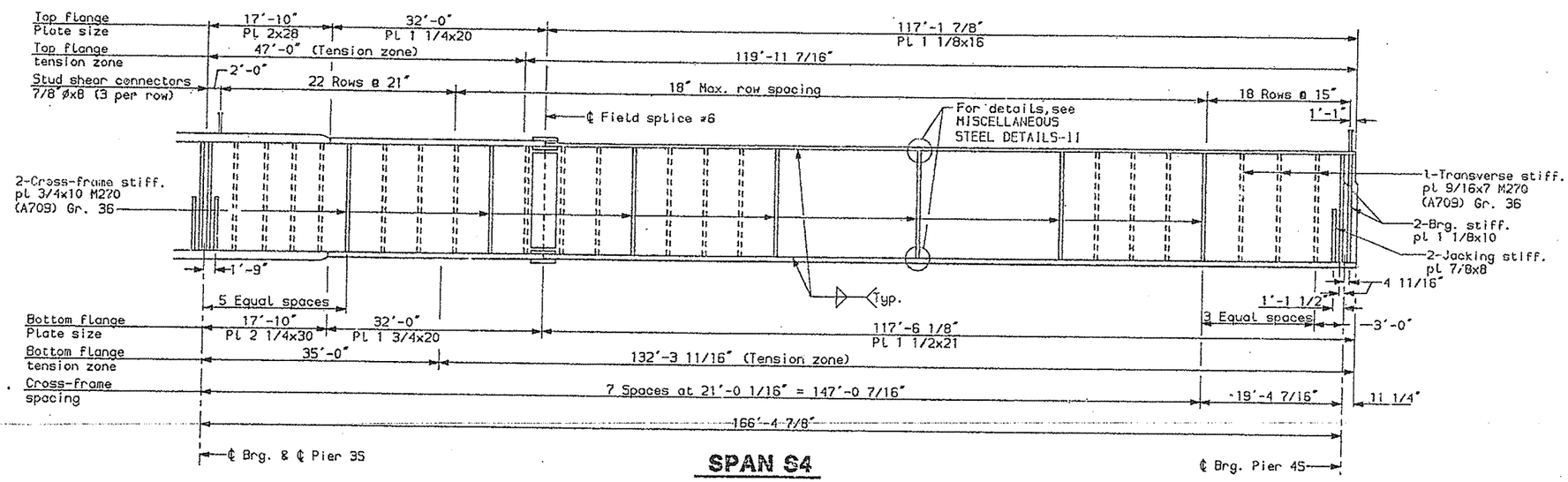

SPAN S4

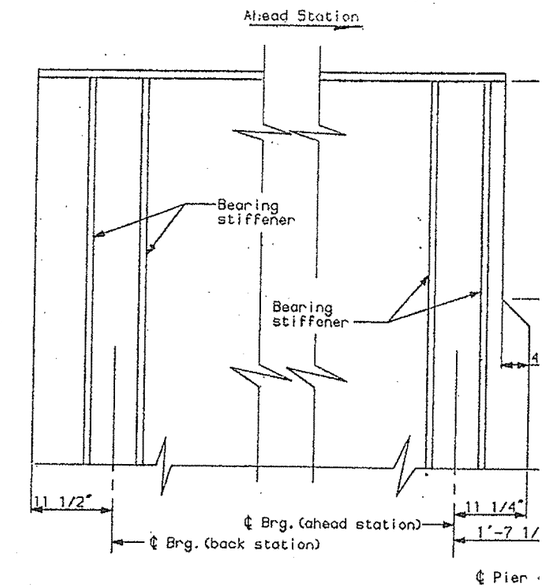

End of Girder Details

NOTES:

Threaded bar supports not shown.

TABLE OF UNFACTORED REACTIONS (klps)

		South Abutment	Pier 1S	Pier 2S	Pier 3S	Pier 4S
DL+SDL		189	582	420	533	164
LL	(Max.)	84	163	153	148	75
	(Min.)	-6	-10	-21	-10	-5
Total	(Max.)	273	745	573	681	239
	(Min.)	183	572	399	523	159

TABLE OF FACTORED MAXIMUM MOMENTS (ft.-kips)

	Span S1 Positive Moment	Pier 1S Negative Moment	Span S2 Positive Moment	Pier 2S Negative Moment	Span S3 Positive Moment	Pier 3S Negative Moment	Span S4 Positive Moment
DL	5782	-11176	2175	-5899	2284	-10087	5117
SDL	2149	-3522	844	-2019	829	-3214	1908
LL+I (Positive)	5105	756	3932	1517	3861	734	4494
LL+I (Negative)	-1161	-7239	-1859	-6078	-1822	-6517	-988
Total (Pos.LL+I)	13036	-13942	6951	-6401	6974	-12567	11519
Total (Neg.LL+I)	6770	-21937	1160	-13996	1291	-19818	6037

TABLE OF FACTORED MAXIMUM SHEARS (kips)

	Span S1 Left	Span S1 Right	Span S2 Left	Span S2 Right	Span S3 Left	Span S3 Right	Span S4 Left	Span S4 Right
DL+SDL	246	-403	354	-273	273	-325	365	-200
LL+I (Positive)	212	11	258	26	271	11	256	11
LL+I (Negative)	-15	-284	-11	-262	-26	-234	-11	-188
Total (Pos.LL+I)	458	-392	612	-247	544	-314	621	-189
Total (Neg.LL+I)	231	-687	343	-535	247	-559	354	-388

F.H.W.A. REG. NO.	STATE	PROJEC
1	MAINE	DPI-0C

SOUTH APPROACH S

STATE OF MAINE
DEPARTMENT OF TRANSPOR

PORTLAND - S. PORTLAI
OVER FORE RIVI
CUMBERLAND COU

ELEVATION GIRI
SPANS S1-S4

SHEET 32 OF 182 AUGUSTA, MAIN

DWN	ELS	6-94
CHECKED	PDB	6-94
REVISION		
FIELD CHANGES		

DESIGN-DETAILED

PLANS

s1s4.es3b

F.H.W.A. REG. NO.	STATE	PROJECT
1	MAINE	DPI-00

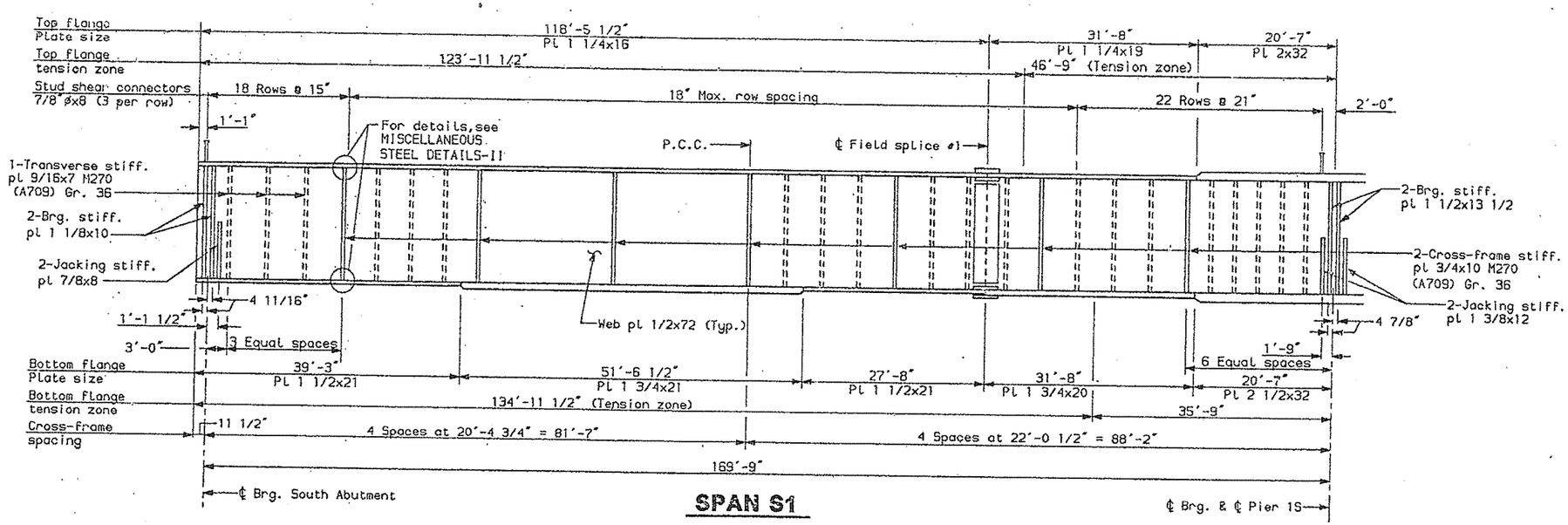

SPAN S1

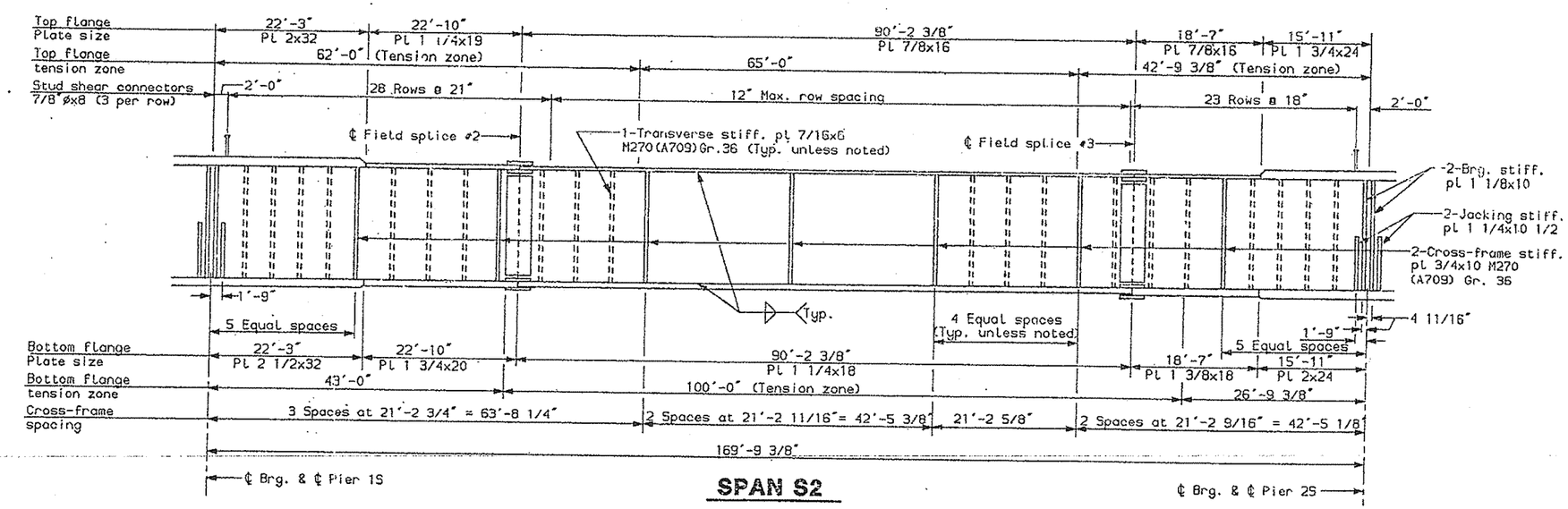

SPAN S2

NOTES:

Threaded bar supports not shown.

PLANS

DESIGN-DETAILED	DWP	ELS	6-94
CHECKED	PDB		6-94
REVISION			
FIELD CHANGES			

s1s4.ss4a

SOUTH APPROACH S

STATE OF MAINE
DEPARTMENT OF TRANSPOR

PORTLAND - S. PORTLAN
OVER FORE RIVE
CUMBERLAND COU

ELEVATION GIRD
SPANS S1-S4

SHEET 33 OF 182 AUGUSTA, MAIN

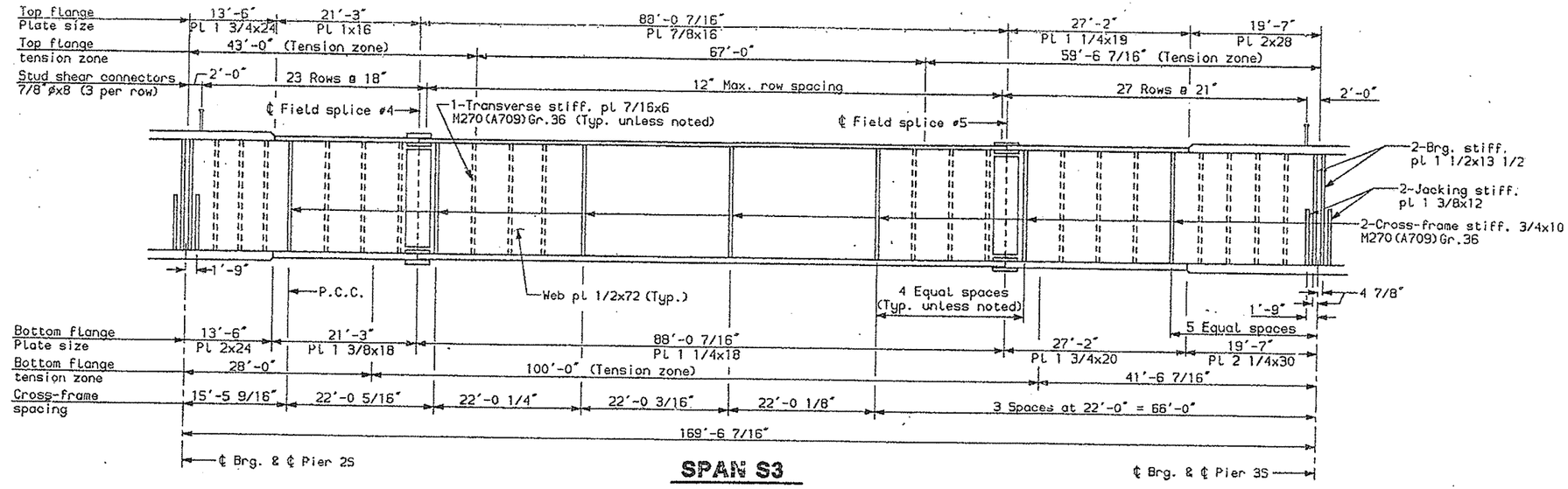

SPAN S3

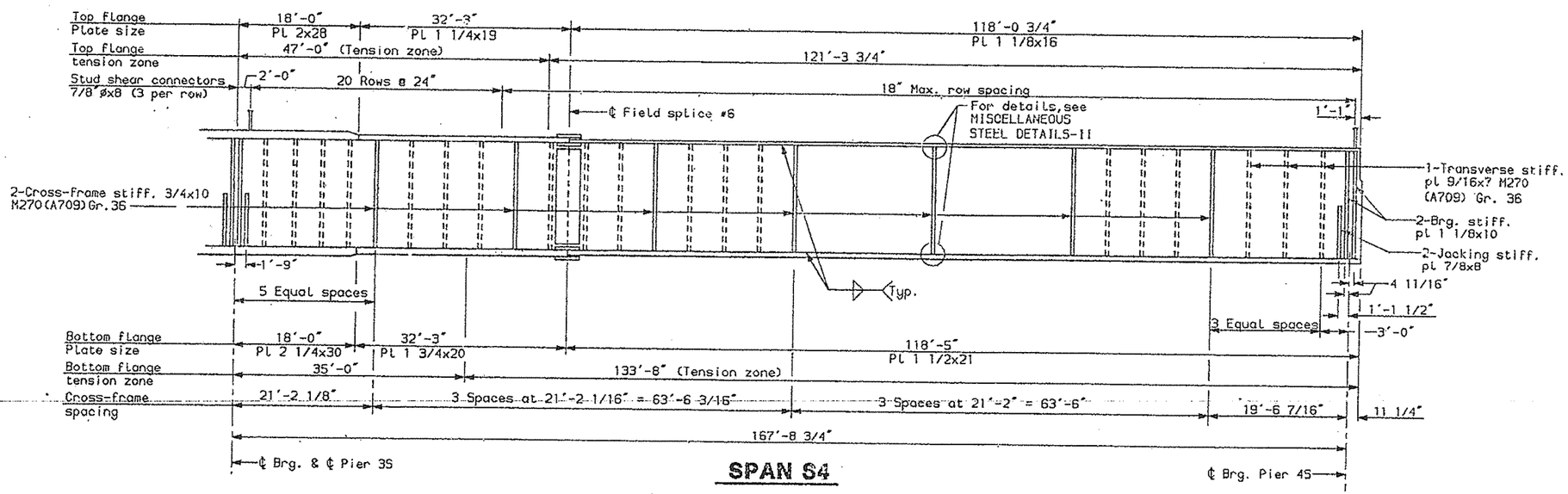

SPAN S4

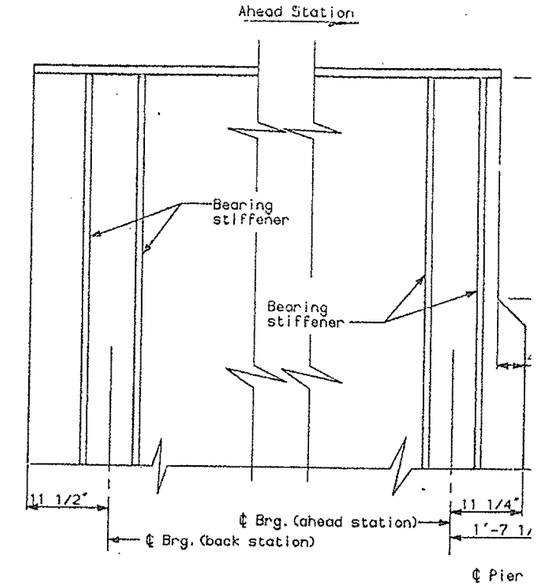

End of Girder Details

NOTES:

Threaded bar supports not shown.

TABLE OF UNFACTORED REACTIONS (kips)						
		South Abutment	Pier 1S	Pier 2S	Pier 3S	Pier 4S
DL+SDL		211	618	451	544	175
LL	(Max.)	83	156	142	140	72
	(Min.)	-4	-9	-19	-9	-4
Total	(Max.)	294	774	593	684	247
	(Min.)	207	609	432	535	171

TABLE OF FACTORED MAXIMUM MOMENTS (ft.-kips)							
	Span S1 Positive Moment	Pier 1S Negative Moment	Span S2 Positive Moment	Pier 2S Negative Moment	Span S3 Positive Moment	Pier 3S Negative Moment	Span S4 Positive Moment
DL	5807	-11127	2155	-5944	2253	-9976	5148
SDL	2131	-3879	854	-2306	800	-3394	1945
LL+I (Positive)	4775	739	3768	1473	3748	696	4331
LL+I (Negative)	-1086	-6962	-1748	-5865	-1733	-6266	-966
Total (Pos.LL+I)	12713	-14267	6777	-6777	6801	-12674	11424
Total (Neg.LL+I)	6852	-21968	1261	-14115	1320	-19636	6127

TABLE OF FACTORED MAXIMUM SHEARS (kips)								
	Span S1 Left	Span S1 Right	Span S2 Left	Span S2 Right	Span S3 Left	Span S3 Right	Span S4 Left	Span S4 Right
DL+SDL	274	-426	374	-298	293	-333	372	-228
LL+I (Positive)	210	11	251	24	247	11	230	9
LL+I (Negative)	-9	-264	-11	-247	-24	-217	-11	-182
Total (Pos.LL+I)	484	-415	625	-274	540	-322	602	-219
Total (Neg.LL+I)	265	-690	363	-545	269	-550	361	-410

REVISION-DETAILED	DWP	ELS	5-94
CHECKED	PDB		5-94
REVISION			
FIELD CHANGES			

PLANS

SOUTH APPROACH

STATE OF MAINE
DEPARTMENT OF TRANSPOR

PORTLAND - S. PORTLA
OVER FORE RIV
CUMBERLAND CO

ELEVATION GIR
SPANS S1-S4

s1s4.sb4b

F.H.W.A. REG. NO.	STATE	PROJECT
1	MAINE	BRI-00

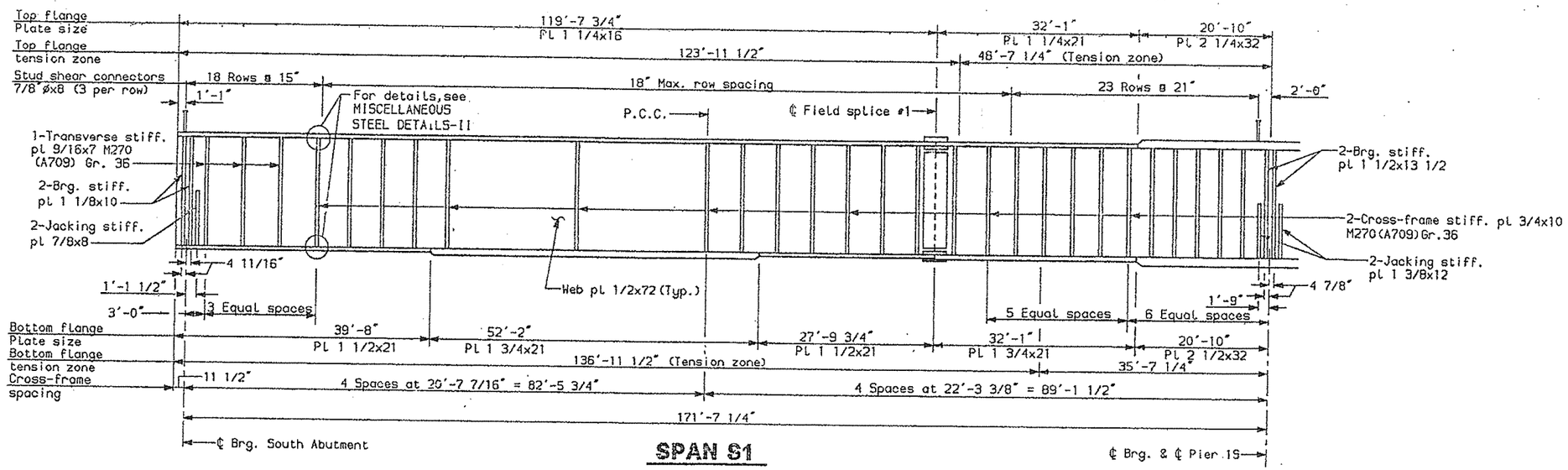

SPAN S1

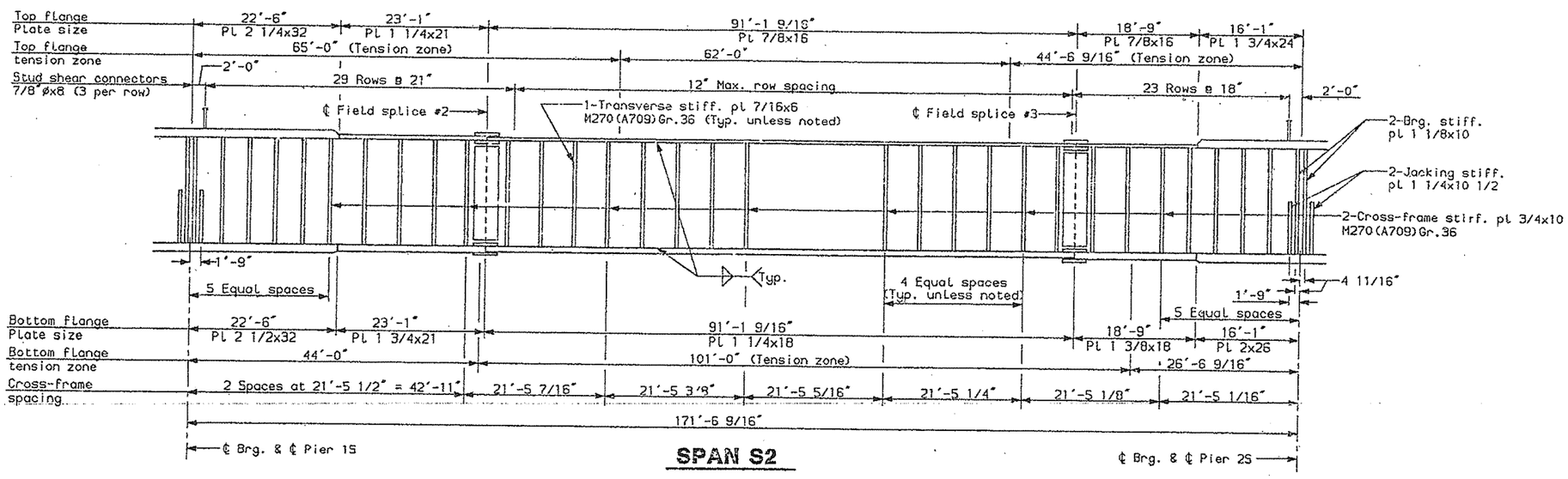

SPAN S2

NOTES:

Threaded bar supports not shown.

DESIGN-DETAILED	DWP	ELS	E-94
CHECKED	PDB		E-94
REVISION			
FIELD CHANGES			

PLANS

s1s4.gis5a

SOUTH APPROACH

STATE OF MAINE
DEPARTMENT OF TRANSPOR

PORTLAND - S. PORTLA
OVER FORE RIV
CUMBERLAND CO

ELEVATION GIR
SPANS S1-S4

SHEET 35 OF 182 AUGUSTA, MAI

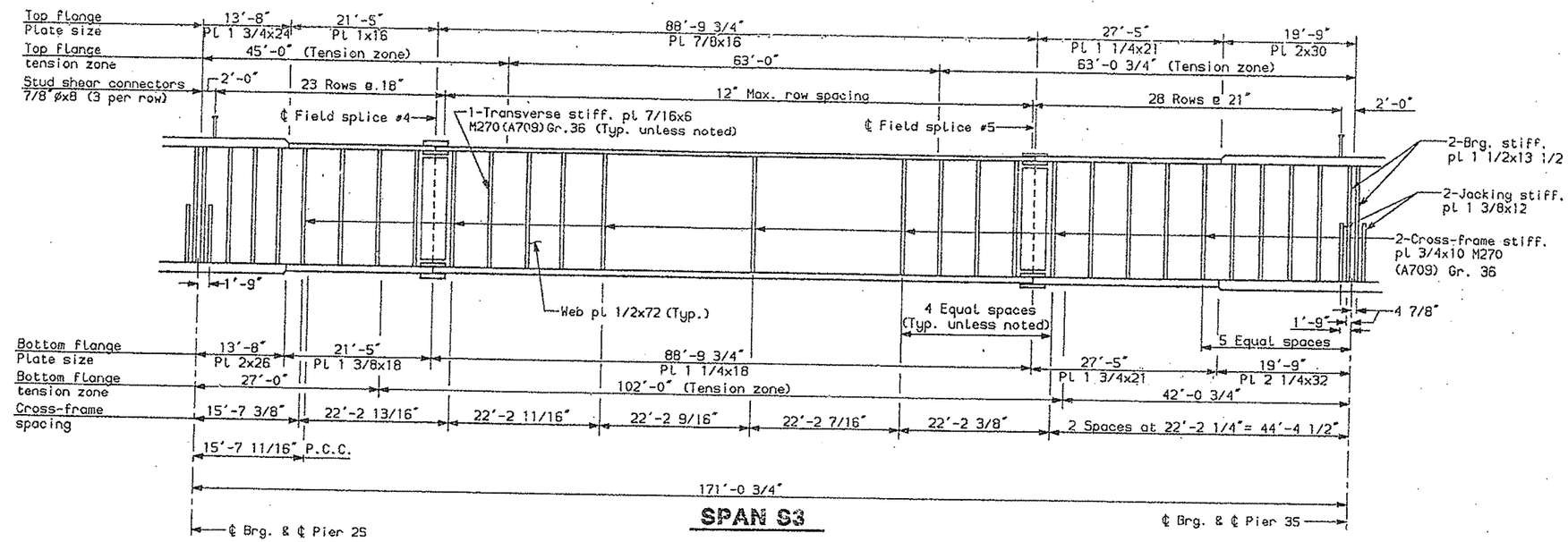

SPAN S3

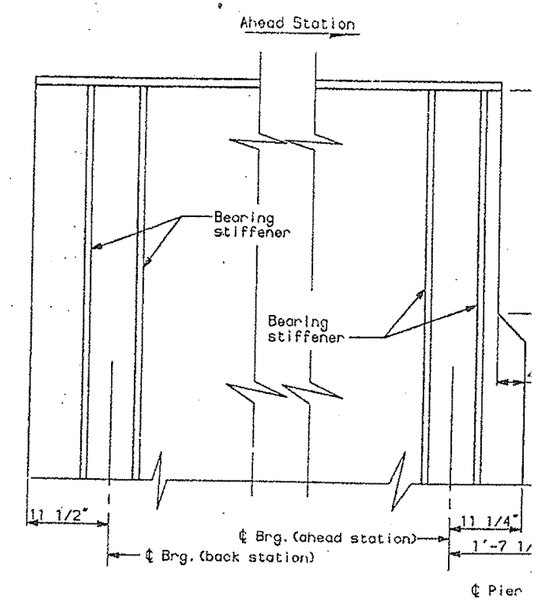

End of Girder Details

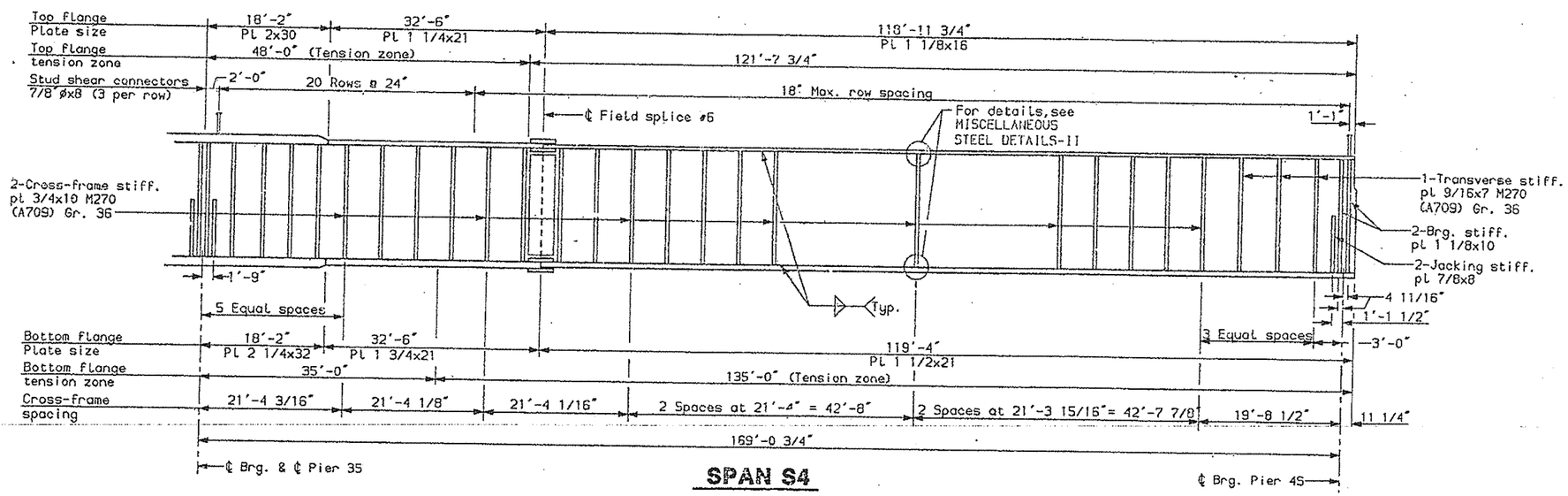

SPAN S4

NOTES:

Threaded bar supports not shown.

TABLE OF UNFACTORED REACTIONS (kips)

		South Abutment	Pier 1S	Pier 2S	Pier 3S	Pier 4S
DL+SDL		184	622	436	548	166
LL	(Max.)	84	173	157	155	77
	(Min.)	-7	-12	-26	-12	-5
Total	(Max.)	268	795	593	703	243
	(Min.)	177	610	410	536	161

TABLE OF FACTORED MAXIMUM MOMENTS (ft.-kips)

	Span S1 Positive Moment	Pier 1S Negative Moment	Span S2 Positive Moment	Pier 2S Negative Moment	Span S3 Positive Moment	Pier 3S Negative Moment	Span S4 Positive Moment
DL	5746	-11879	2097	-5977	2277	-10546	5143
SDL	2070	-3912	876	-2284	793	-3526	1964
LL+I (Positive)	5302	971	4336	1881	4270	916	4749
LL+I (Negative)	-1350	-8121	-2221	-6684	-2158	-7243	-1272
Total (Pos.LL+I)	13118	-14820	7309	-6380	7290	-13156	11856
Total (Neg.LL+I)	6466	-23912	752	-14945	862	-21315	5835

TABLE OF FACTORED MAXIMUM SHEARS (kips)

	Span S1 Left	Span S1 Right	Span S2 Left	Span S2 Right	Span S3 Left	Span S3 Right	Span S4 Left	Span S4 Right
DL+SDL	239	-428	377	-287	281	-332	378	-213
LL+I (Positive)	212	15	271	32	271	15	260	11
LL+I (Negative)	-17	-290	-15	-275	-32	-234	-15	-195
Total (Pos.LL+I)	451	-413	648	-255	552	-317	638	-202
Total (Neg.LL+I)	222	-718	362	-562	249	-566	363	-408

DESIGN-DETAILED	DWP	6-94
CHECKED	PDB	6-94
REVISION	ELS	
FIELD CHANGES		

PLANS

s1s4.ssSb

SOUTH APPROACH

STATE OF MAINE
DEPARTMENT OF TRANSPOR

PORTLAND - S. PORTLA
OVER FORE RIV
CUMBERLAND CO

ELEVATION GIR
SPANS S1-S4

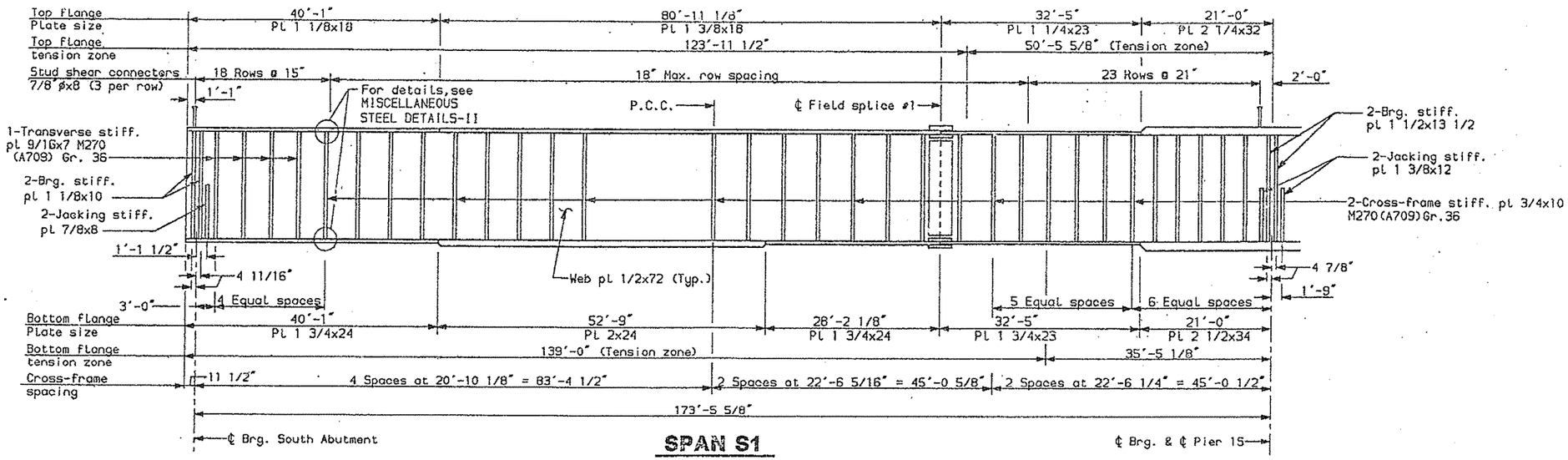

SPAN S1

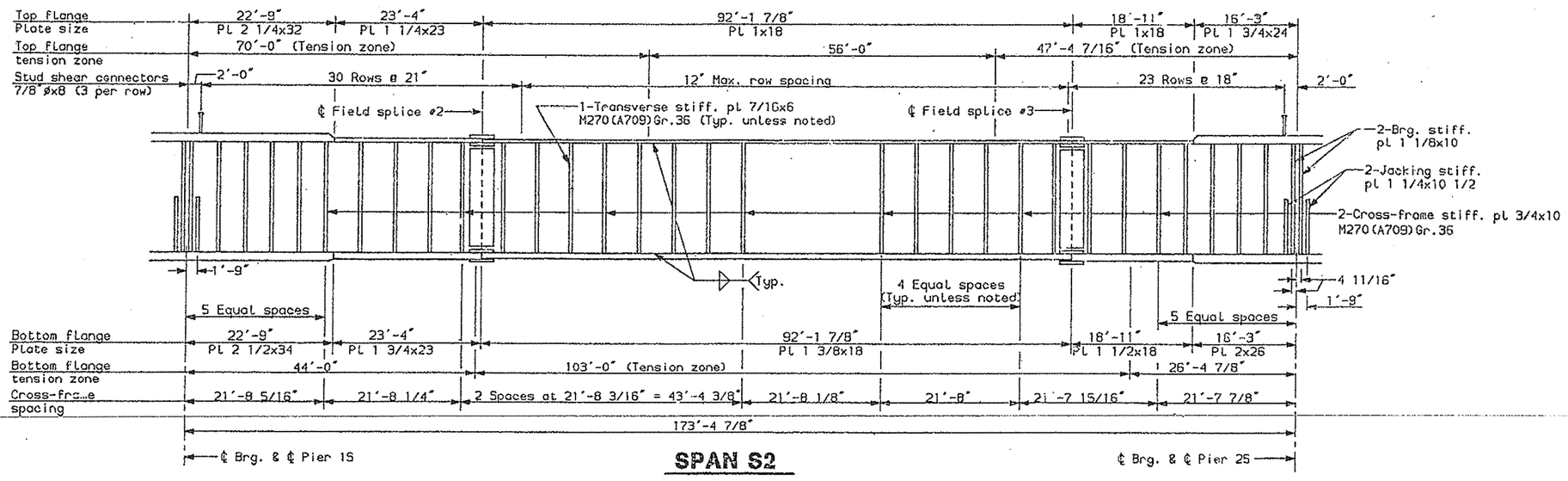

SPAN S2

NOTES:

Threaded bar supports not shown.

REV. NO.		
1	MAINE	DPI-00

DESIGN-DETAILED	DMP	ELS
CHECKED	FDB	
REVISION		
FIELD CHANGES		

PLANS

SOUTH APPROACH

STATE OF MAINE
DEPARTMENT OF TRANSPO

PORTLAND - S. PORTLA
OVER FORE RI
CUMBERLAND CO

ELEVATION GIR
SPANS S1-S

SHEET 37 OF 182 AUGUSTA, MA

F.H.W.A. REG. NO.	STATE	PROJECT NO
1	MAINE	DPI-0068(0

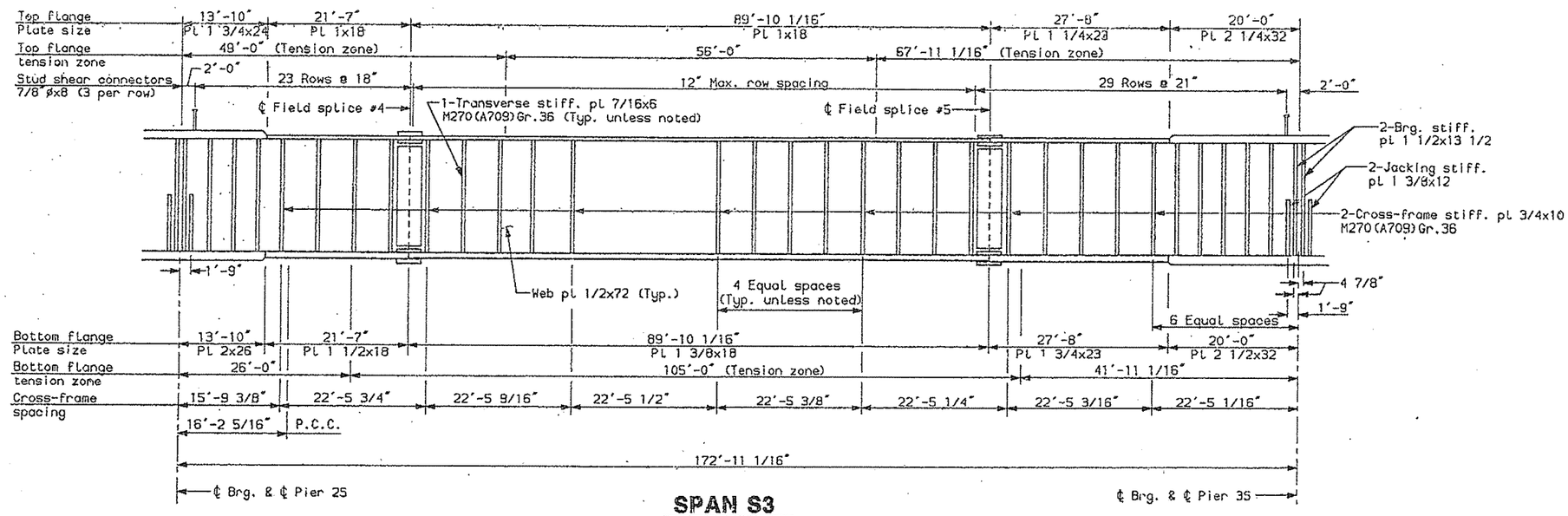

SPAN S3

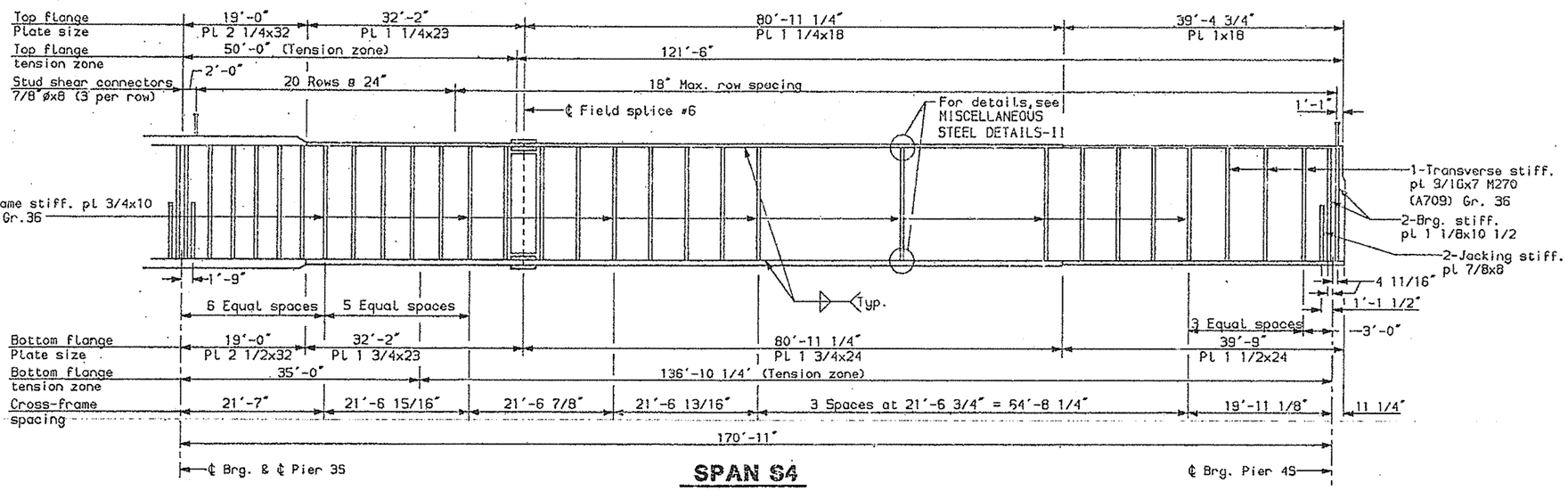

SPAN S4

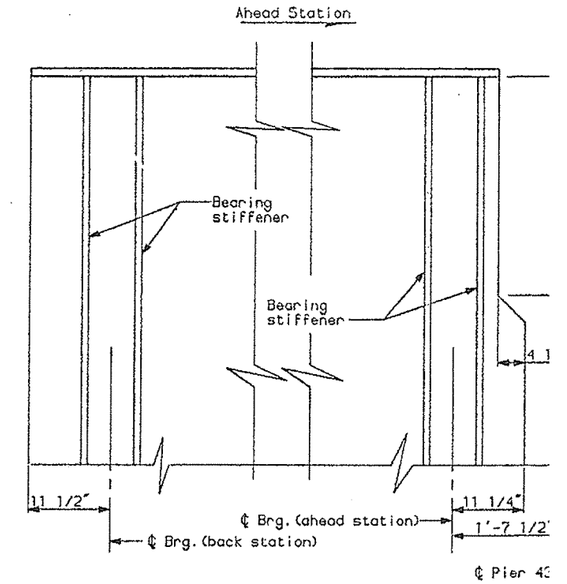

End of Girder Details

NOTES:

Threaded bar supports not shown.

TABLE OF UNFACTORED REACTIONS (kips)

		South Abutment	Pier 1S	Pier 2S	Pier 3S	Pier 4S
DL+SDL		202	609	433	588	200
LL	(Max.)	88	189	174	184	87
	(Min.)	-9	-17	-33	-17	-9
Total	(Max.)	290	798	607	772	287
	(Min.)	193	592	400	571	191

TABLE OF FACTORED MAXIMUM MOMENTS (ft.-kips)

	Span S1 Positive Moment	Pier 1S Negative Moment	Span S2 Positive Moment	Pier 2S Negative Moment	Span S3 Positive Moment	Pier 3S Negative Moment	Span S4 Positive Moment
DL	6624	-11829	2133	-5955	2250	-11371	6011
SDL	2431	-3903	962	-2217	922	-3792	2376
LL+I (Positive)	7161	1300	5352	2381	5295	1291	6468
LL+I (Negative)	-1996	-9210	-2944	-7477	-2929	-8719	-1857
Total (Pos.LL+I)	16216	-14132	8447	-5791	8467	-13872	14855
Total (Neg.LL+I)	7059	-24942	151	-15649	243	-23882	6530

TABLE OF FACTORED MAXIMUM SHEARS (kips)

	Span S1 Left	Span S1 Right	Span S2 Left	Span S2 Right	Span S3 Left	Span S3 Right	Span S4 Left	Span S4 Right
DL+SDL	263	-426	363	-280	283	-356	404	-260
LL+I (Positive)	221	20	295	41	310	20	308	20
LL+I (Negative)	-22	-318	-20	-308	-41	-290	-20	-219
Total (Pos.LL+I)	484	-406	658	-239	593	-336	712	-240
Total (Neg.LL+I)	241	-744	343	-588	242	-646	384	-479

PLANS

DATE	DETAIL	CHECKED	REVISION	FIELD CHANGES
6-94	DRF	PDB		

s1s4.ss6b

SOUTH APPROACH S

STATE OF MAINE
DEPARTMENT OF TRANSPOR

PORTLAND - S. PORTLA
OVER FORE RIV
CUMBERLAND CO

ELEVATION GIR
SPANS S1-S4

SHEET 38 OF 182 AUGUSTA, MAI

F.H.W.A. REG. NO.	STATE	PROJEC
1	MAINE	OPI-0

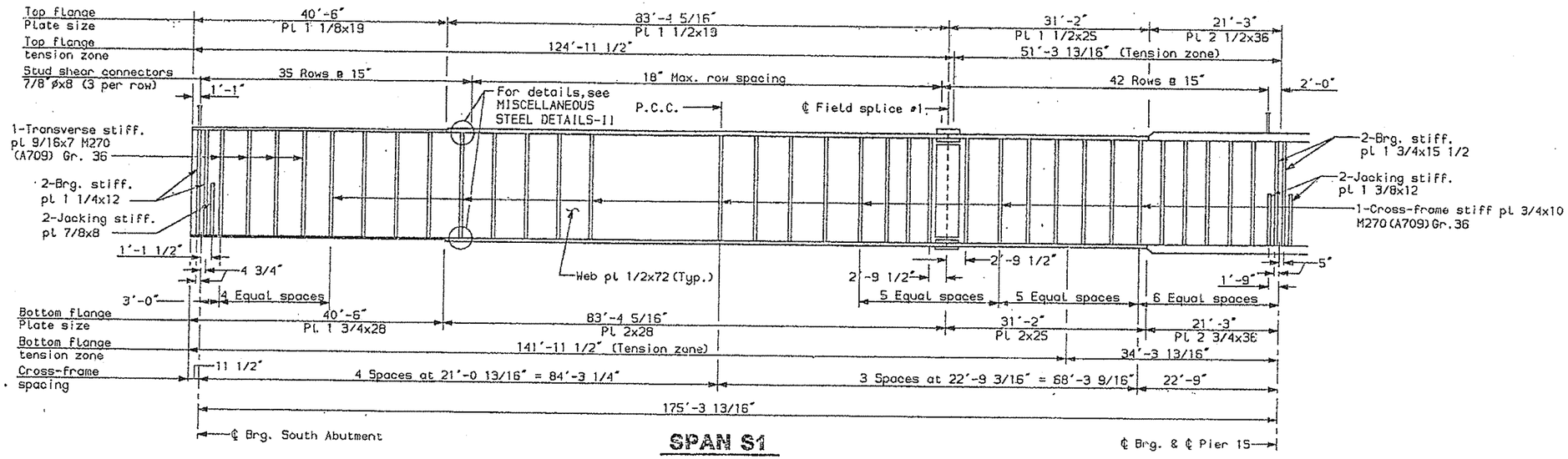

SPAN S1

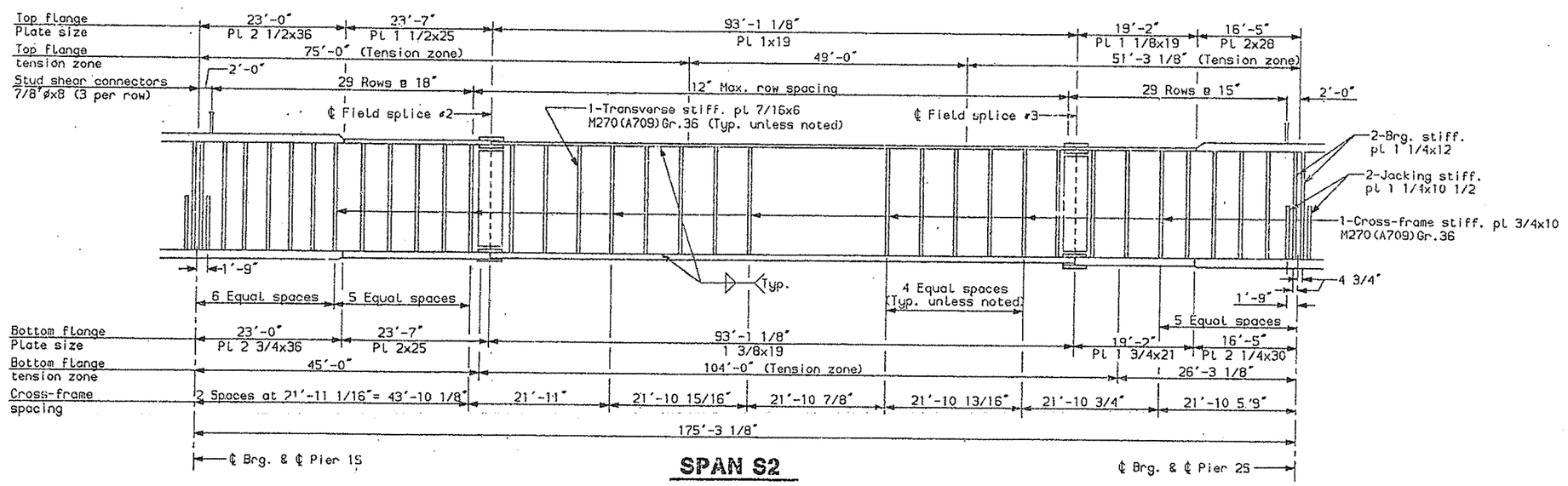

SPAN S2

NOTES:

Threaded bar supports not shown.

DESIGN-DETAILED	DWP	ELS	6-94
CHECKED	POB		6-94
REVISION			
FIELD CHANGES			

PLANS

s1s4.ss7a

SOUTH APPROACH

STATE OF MAINE
DEPARTMENT OF TRANSPO

PORTLAND - S. PORTLA
OVER FORE RIV
CUMBERLAND CO

ELEVATION GIR
SPANS S1-S4

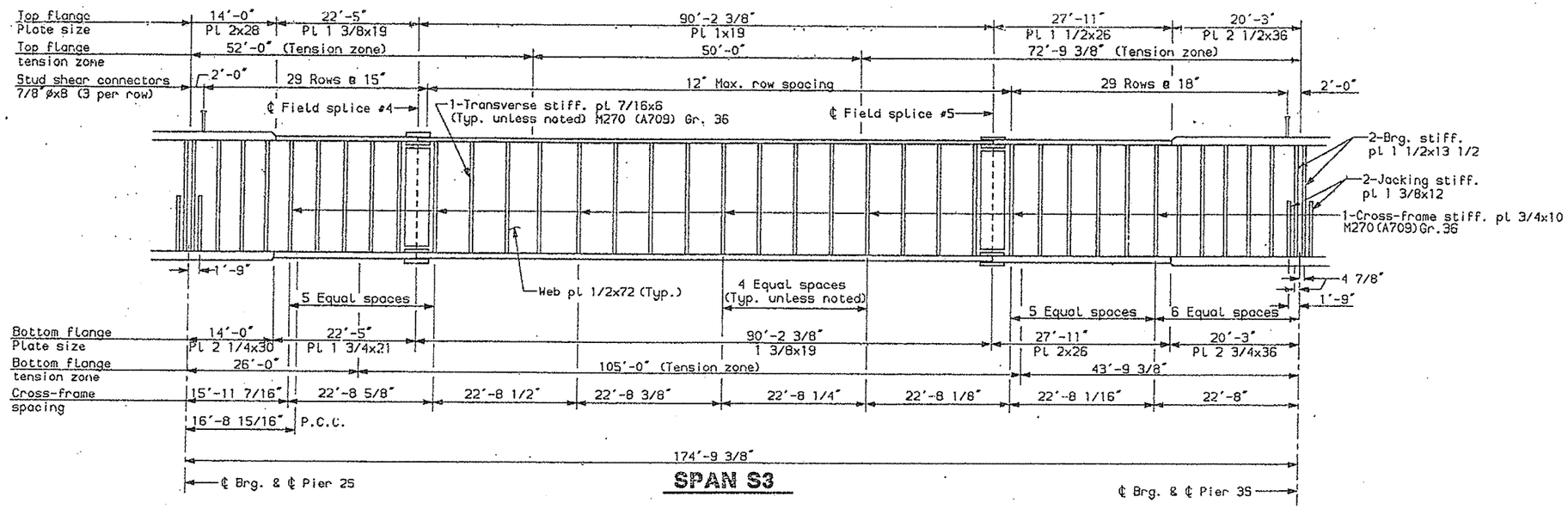

SPAN S3

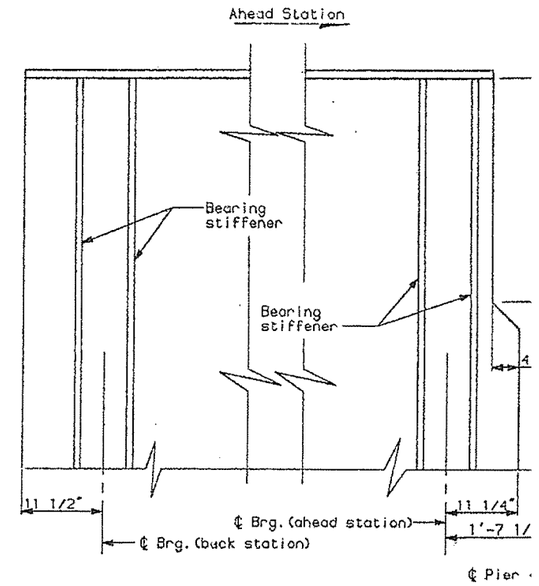

End of Girder Details

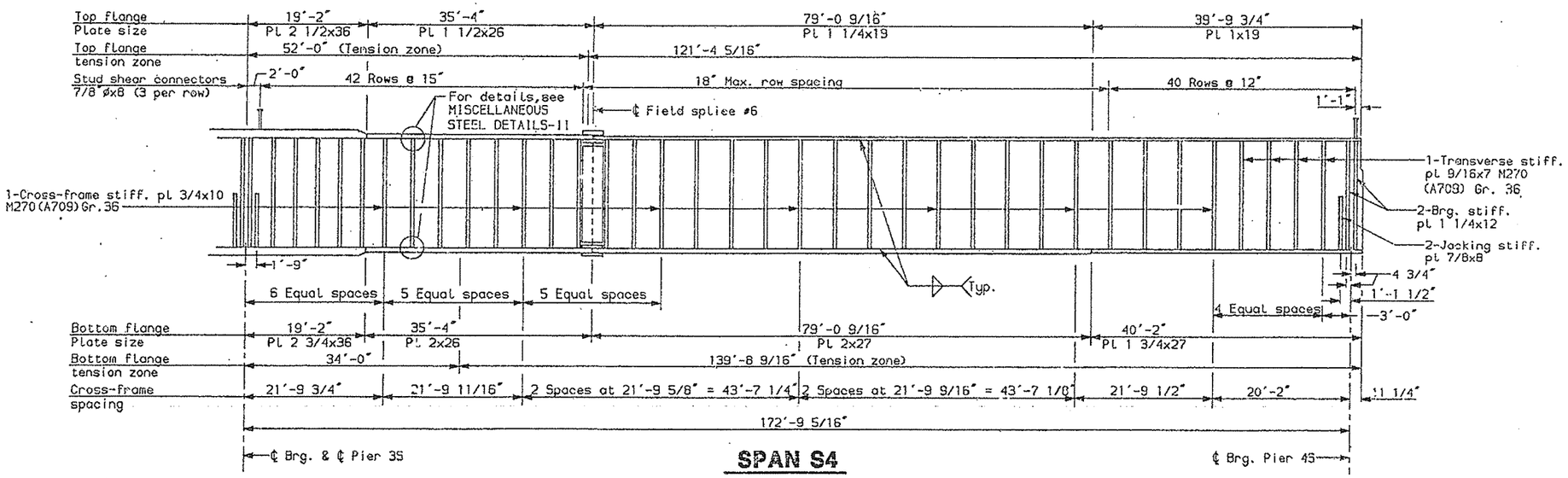

SPAN S4

NOTES:

Threaded bar supports not shown.

TABLE OF UNFACTORED REACTIONS (kips)

		South Abutment	Pier 1S	Pier 2S	Pier 3S	Pier 4S
DL+SDL		229	641	475	637	217
LL	(Max.)	106	202	190	205	105
	(Min.)	-16	-27	-45	-29	-19
Total	(Max.)	335	843	665	842	322
	(Min.)	213	614	430	608	198

TABLE OF FACTORED MAXIMUM MOMENTS (ft.-kips)

	Span S1 Positive Moment	Pier 1S Negative Moment	Span S2 Positive Moment	Pier 2S Negative Moment	Span S3 Positive Moment	Pier 3S Negative Moment	Span S4 Positive Moment
DL	7314	-13039	2270	-6453	2323	-12766	6548
SDL	2842	-5048	1058	-3351	1069	-5031	2969
LL+I (Positive)	9120	2169	6216	3512	6400	2184	9063
LL+I (Negative)	-3010	-11613	-3731	-10062	-3686	-11472	-3055
Total (Pos.LL+I)	19276	-15918	9544	-6292	9792	-15613	18580
Total (Neg.LL+I)	7146	-29700	-403	-19866	-294	-29269	6462

TABLE OF FACTORED MAXIMUM SHEARS (kips)

	Span S1 Left	Span S1 Right	Span S2 Left	Span S2 Right	Span S3 Left	Span S3 Right	Span S4 Left	Span S4 Right
DL+SDL	298	-451	380	-311	307	-378	446	-281
LL+I (Positive)	269	32	303	56	340	35	347	46
LL+I (Negative)	-48	-340	-32	-340	-56	-308	-35	-264
Total (Pos.LL+I)	567	-419	683	-255	647	-343	793	-235
Total (Neg.LL+I)	250	-791	348	-651	251	-686	411	-545

PLANS

DESIGN-DETAILED | CHECKED | REVISION | FIELD CHANGES

DWP | PDB | ELS | 6-94 | 6-94

SOUTH APPROACH

STATE OF MAINE
DEPARTMENT OF TRANSPO

PORTLAND - S. PORTLA
OVER FORE RIV
CUMBERLAND CO

ELEVATION GIR
SPANS S1-S4

SHEET 40 OF 182 AUGUSTA, MA

e164.s97b

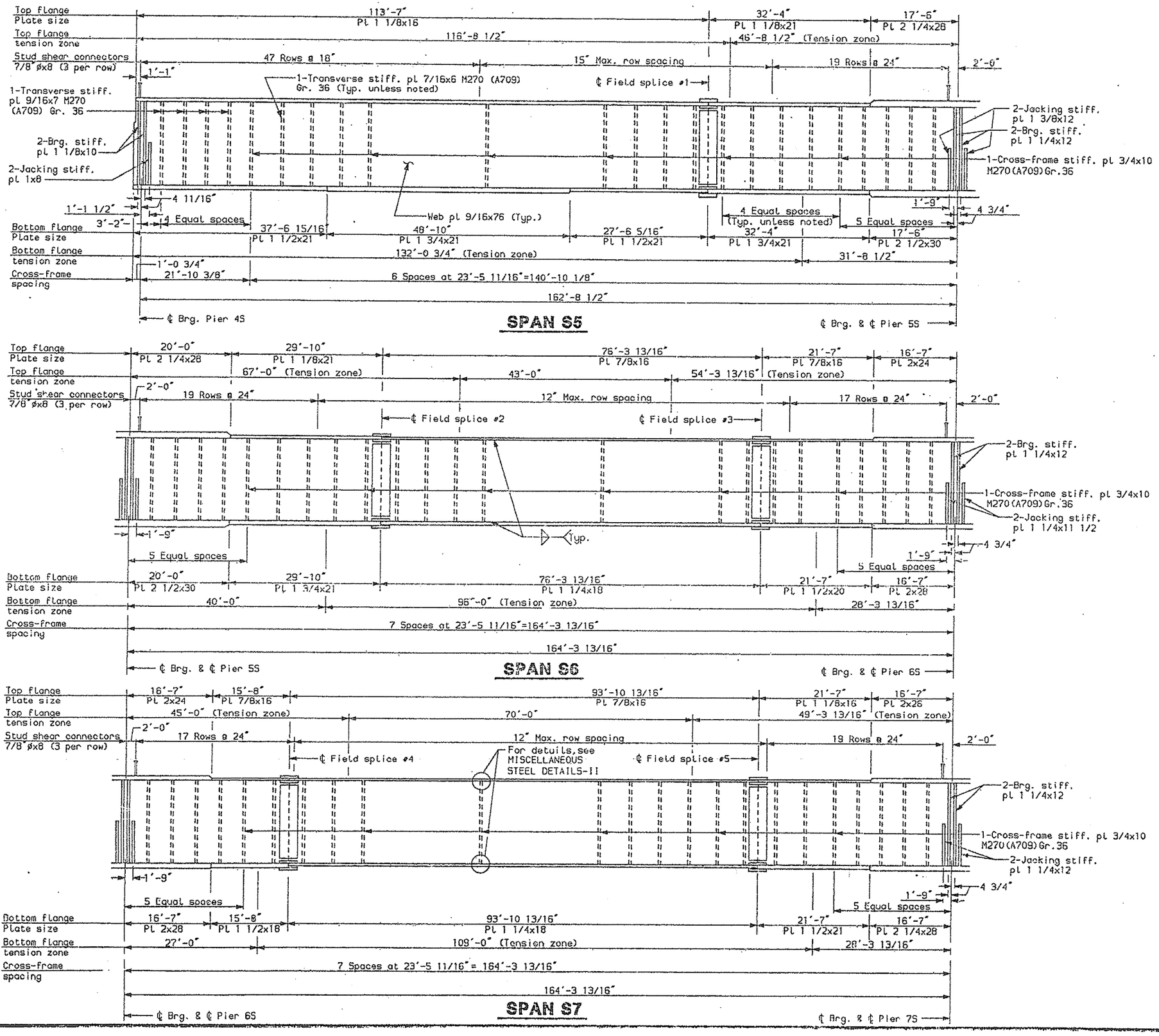

SPAN S5

SPAN S6

SPAN S7

NOTES:

Utility supports not shown.

F.H.W.A. REG. NO.	STATE	PROJEC
1	MAINE	DPI-0

	BY	DATE
DESIGN-DETAILED	DWP	6-94
CHECKED	ELS	6-94
REVISION	PCB	
FIELD CHANGES		

PLANS

SOUTH APPROACH

STATE OF MAINE
DEPARTMENT OF TRANSPO

PORTLAND - S. PORTL
OVER FORE RI
CUMBERLAND CO

ELEVATION GIR
SPANS S5-S

SHEET 41 OF 182 AUGUSTA, MA

s5e9.ss1a

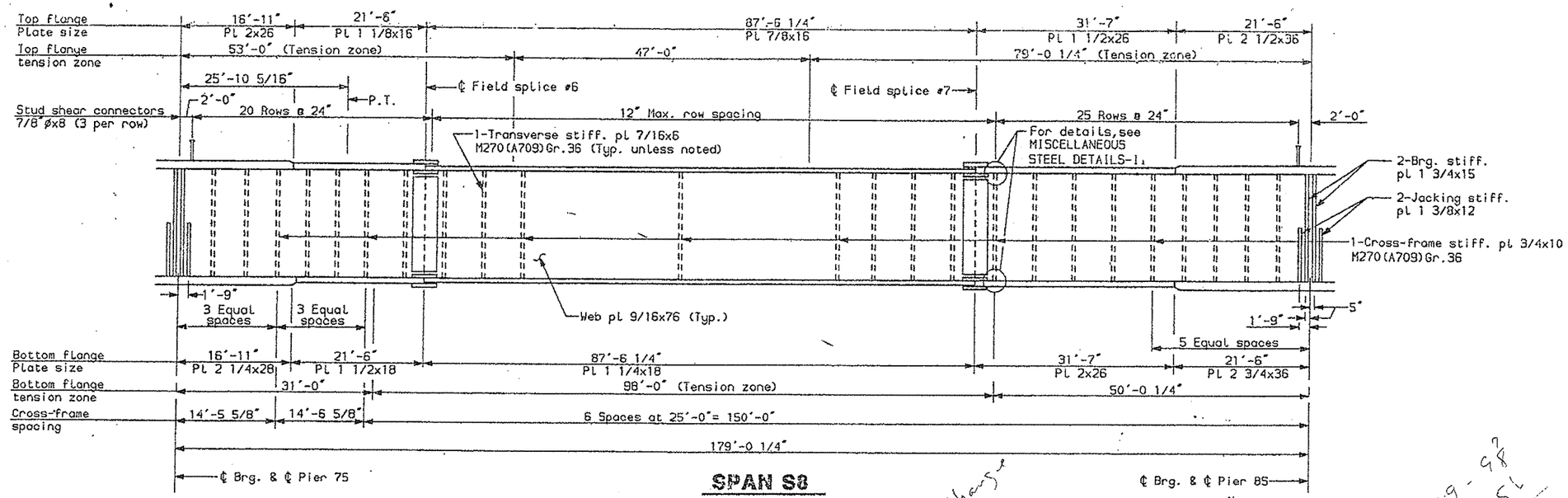

SPAN S8

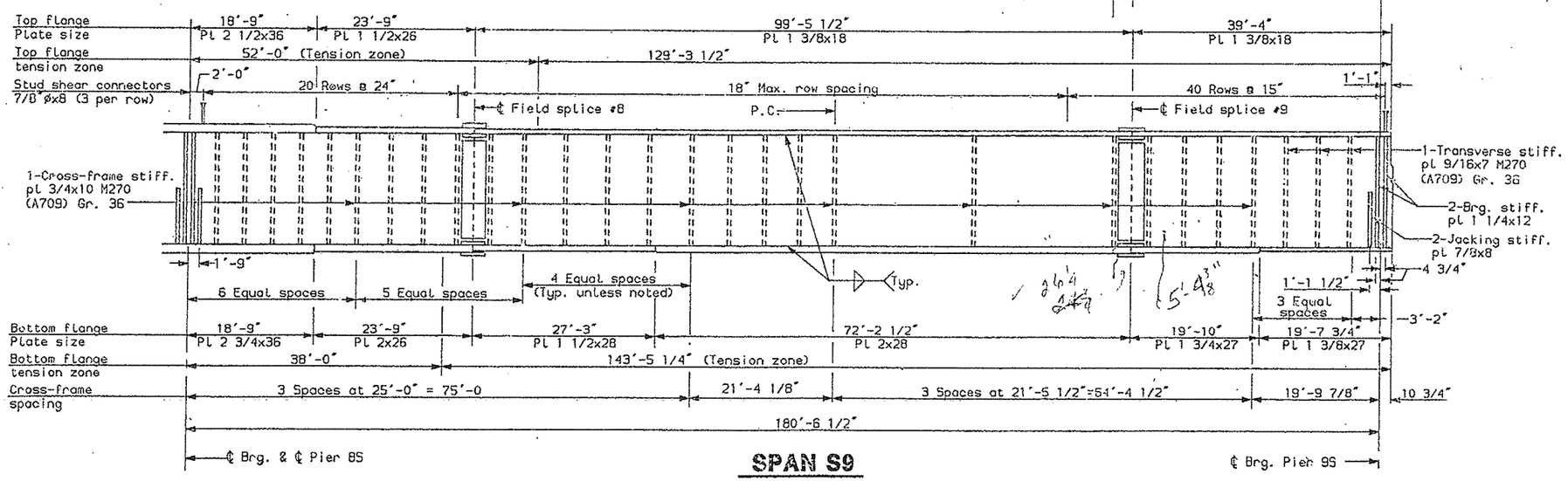

SPAN S9

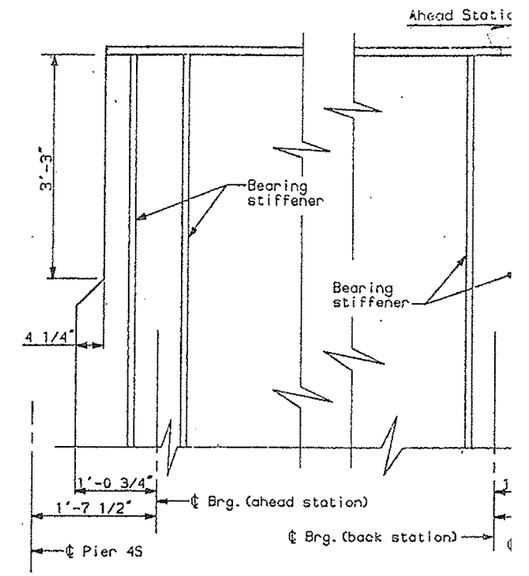

End of Girder Details

NOTES:

Utility supports not shown.

TABLE OF UNFACTORED REACTIONS (kips)

		Pier 4S	Pier 5S	Pier 6S	Pier 7S	Pier 8S
DL+SDL		207	682	555	575	776
LL	(Max.)	68	152	147	154	161
	(Min.)	-21	-38	-52	-54	-35
Total	(Max.)	275	834	702	729	937
	(Min.)	186	644	503	521	741

TABLE OF FACTORED MAXIMUM MOMENTS (ft.-kips)

	Span 5S Positive Moment	Pier 5S Negative Moment	Span 6S Positive Moment	Pier 6S Negative Moment	Span 7S Positive Moment	Pier 7S Negative Moment	Span 8S Positive Moment	Pier 8S Negative Moment	Span 9S Positive Moment
DL	5732	-11098	2129	-7245	3409	-7979	2292	-15856	8464
SDL	2276	-4229	940	-3052	1214	-3489	1102	-5649	3275
LL+I (Positive)	6344	2249	5243	3066	5577	3404	5666	2466	8136
LL+I (Negative)	-2843	-8025	-3430	-7382	-3421	-8201	-3623	-9958	-3200
Total (Pos.LL+I)	14352	-13078	8312	-7231	10200	-8064	9000	-19039	19875
Total (Neg.LL+I)	5165	-23352	-361	-17679	1202	-19669	-229	-31463	8539

TABLE OF FACTORED MAXIMUM SHEARS (kips)

	Span 5S Left	Span 5S Right	Span 6S Left	Span 6S Right	Span 7S Left	Span 7S Right	Span 8S Left	Span 8S Right	Span 9S Left	Span 9S Right
DL+SDL	268	-468	416	-351	369	-381	367	-462	541	-339
LL+I (Positive)	171	48	228	65	251	67	273	43	269	52
LL+I (Negative)	-52	-249	-48	-243	-65	-262	-67	-232	-43	-199
Total (Pos.LL+I)	439	-420	644	-286	620	-314	640	-419	810	-287
Total (Neg.LL+I)	216	-717	368	-594	304	-643	300	-694	498	-538

T. DES.	DESIGN-DETAILED	CHECKED	REVISION	FIELD CHANGES	BY	DWN	PDG	ELS	DATE	6-94	6-94

PLANS

s5s9.sslb

SOUTH APPROAC

STATE OF MAI
DEPARTMENT OF TRANS

PORTLAND - S. PORTL
OVER FORE R
CUMBERLAND C

ELEVATION GI
SPANS S5-S

SHEET 42 OF 182 AUGUSTA, M

F.H.W.A. REG. NO.	STATE	PROJE
1	MAINE	BRI-0

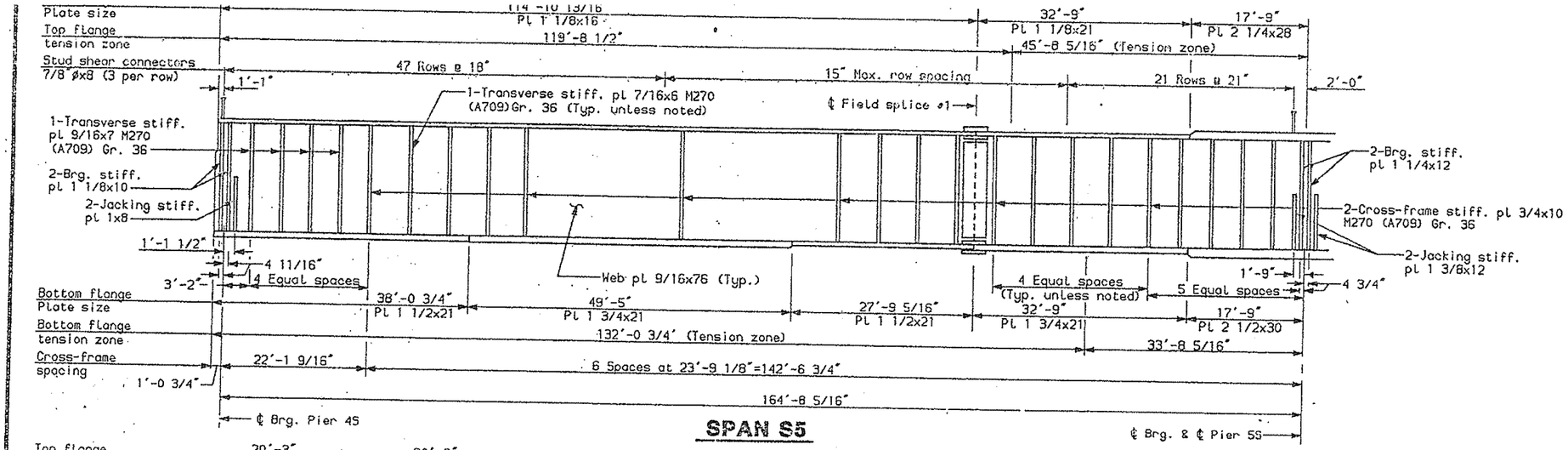

SPAN S5

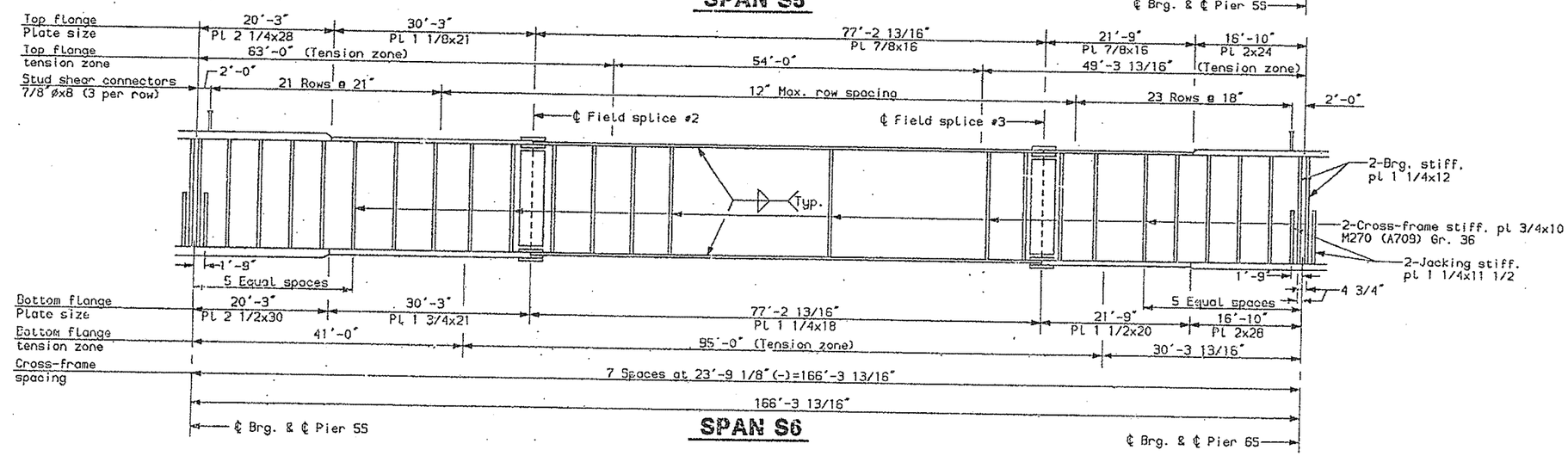

SPAN S6

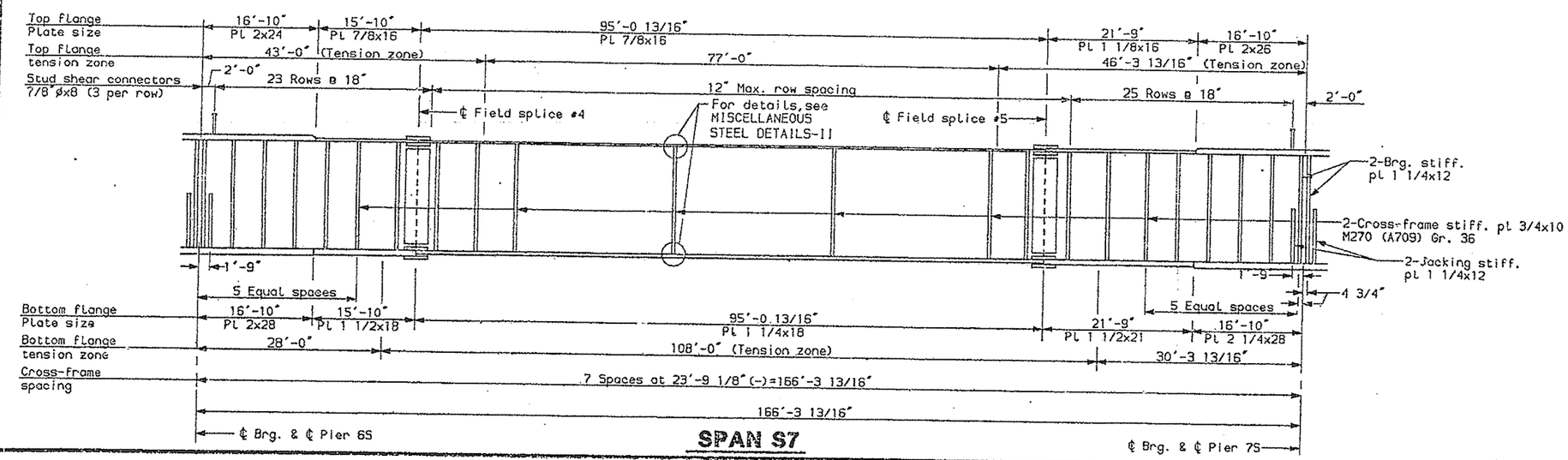

SPAN S7

NOTES:

Utility and threaded bar supports not

DESIGN-DETAILED	DWP	ELS	6-94
CHECKED	PDB		6-94
REVISION			
FIELD CHANGES			

PLANS

s5s9.ss2c

SOUTH APPROACH

STATE OF MAINE
DEPARTMENT OF TRANSPO

PORTLAND - S. PORTLA
OVER FORE RIV
CUMBERLAND CO

ELEVATION GIR
SPANS S5-S9

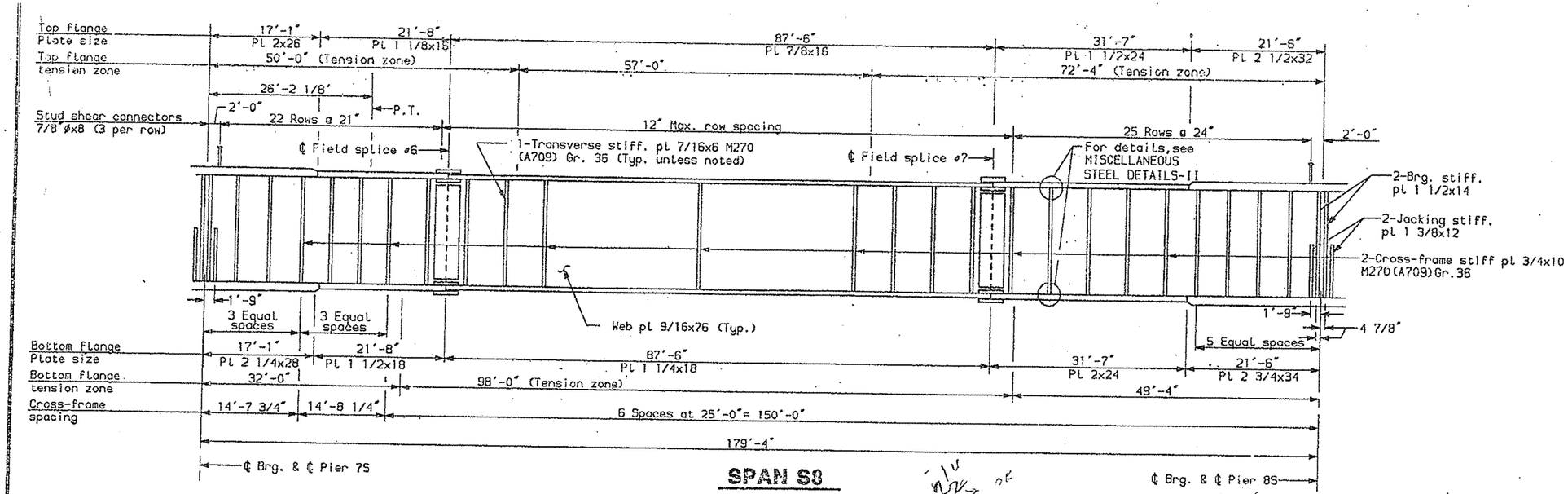

SPAN S8

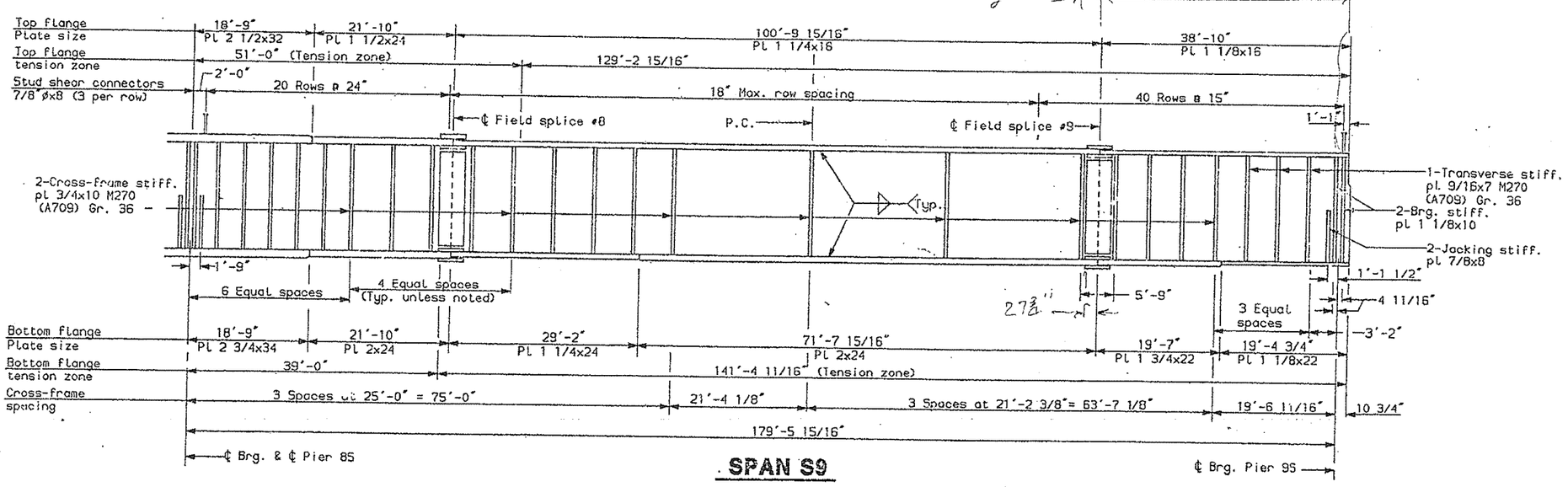

SPAN S9

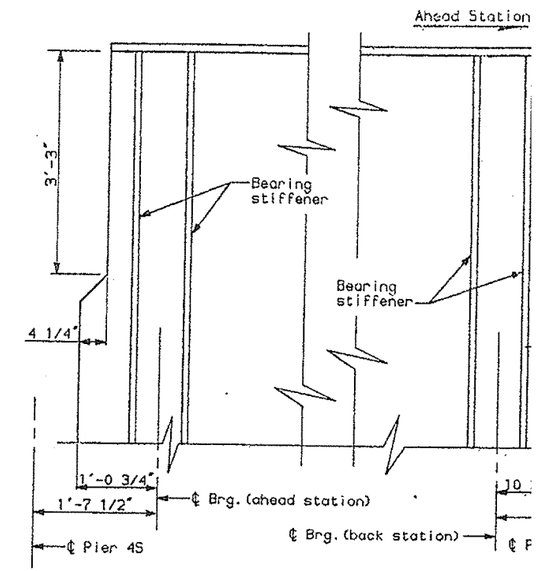

End of Girder Details

NOTES:

Utility and threaded bar supports not s

TABLE OF UNFACTORED REACTIONS (kips)

		Pier 4S	Pier 5S	Pier 6S	Pier 7S	Pier 8S	Pi 9
DL+SDL		205	628	517	543	726	23
LL	(Max.)	90	175	170	174	189	9
	(Min.)	-8	-15	-28	-29	-15	-
Total	(Max.)	295	803	687	717	915	32
	(Min.)	197	613	489	514	711	22

TABLE OF FACTORED MAXIMUM MOMENTS (ft.-kips)

	Span 5S Positive Moment	Pier 5S Negative Moment	Span 6S Positive Moment	Pier 6S Negative Moment	Span 7S Positive Moment	Pier 7S Negative Moment	Span 8S Positive Moment	Pier 8S Negative Moment	Span 9S Positive Moment
DL	5949	-11379	2166	-7526	3522	-8368	2360	-15232	7563
SDL	2261	-3775	885	-2649	1183	-3038	1037	-4775	2890
LL+I (Positive)	5584	1153	4437	1944	4747	2162	4851	1207	6699
LL+I (Negative)	-1564	-7546	-2405	-6762	-2340	-7534	-2613	-8938	-1772
Total (Pos.LL+I)	13794	-14001	7488	-8231	9452	-9244	8248	-18800	17152
Total (Neg.LL+I)	6646	-22700	646	-16937	2365	-18940	784	-28945	8681

TABLE OF FACTORED MAXIMUM SHEARS (kips)

	Span 5S Left	Span 5S Right	Span 6S Left	Span 6S Right	Span 7S Left	Span 7S Right	Span 8S Left	Span 8S Right	Span 9S Left	Span 9S Right
DL+SDL	267	-434	382	-326	345	-360	347	-437	499	-303
LL+I (Positive)	228	17	273	35	290	35	301	17	308	20
LL+I (Negative)	-17	-290	-17	-286	-35	-303	-35	-282	-17	-230
Total (Pos.LL+I)	495	-417	655	-291	635	-325	648	-420	807	-283
Total (Neg.LL+I)	250	-724	365	-612	310	-663	312	-719	482	-533

DWN	CHECKED	REVISION	JN-DET.
JLS	PDB	FIELD CHANGES	5-94

PLANS

g5s9.ss2b

SOUTH APPROACH S

STATE OF MAINE
DEPARTMENT OF TRANSPOR

PORTLAND - S. PORTLAN
OVER FORE RIVE
CUMBERLAND COU

ELEVATION GIRD
SPANS S5-S9

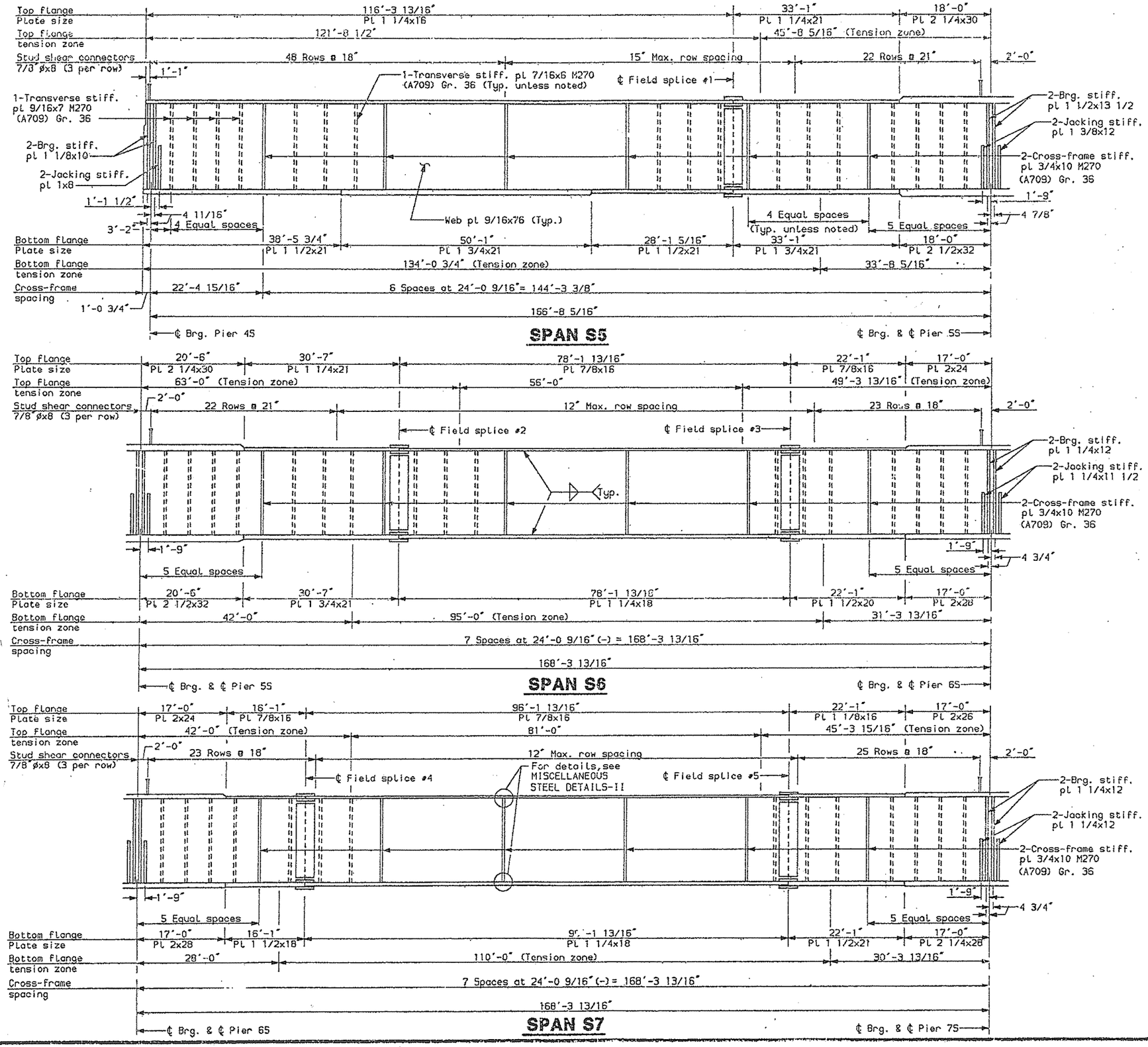

SPAN S5

SPAN S6

SPAN S7

NOTES:

Threaded bar supports not shown.

DESIGN-DETAILED	DWP	ELS	6-94
CHECKED	PDB		6-94
REVISION			
FIELD CHANGES			

PLANS

s5s9.ss3a

SOUTH APPROACH

STATE OF MAINE
DEPARTMENT OF TRANSPO

PORTLAND - S. PORTLA
OVER FORE RIV
CUMBERLAND CO

ELEVATION GIR
SPANS S5-S9

SHEET 45 OF 182 AUGUSTA, MA

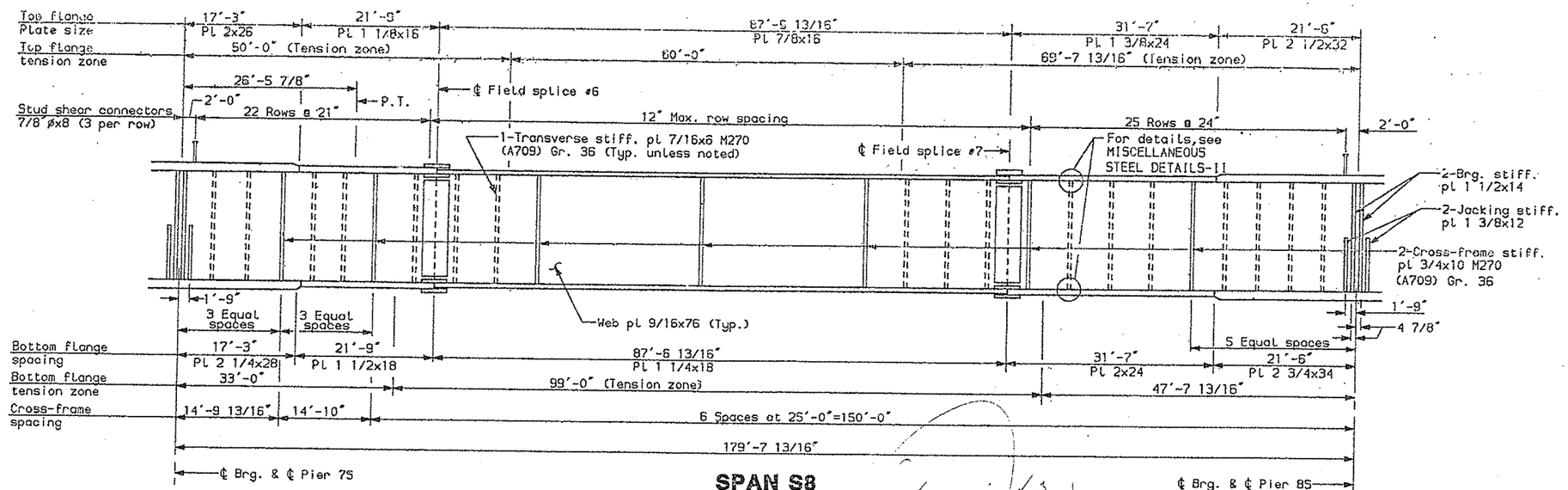

SPAN S8

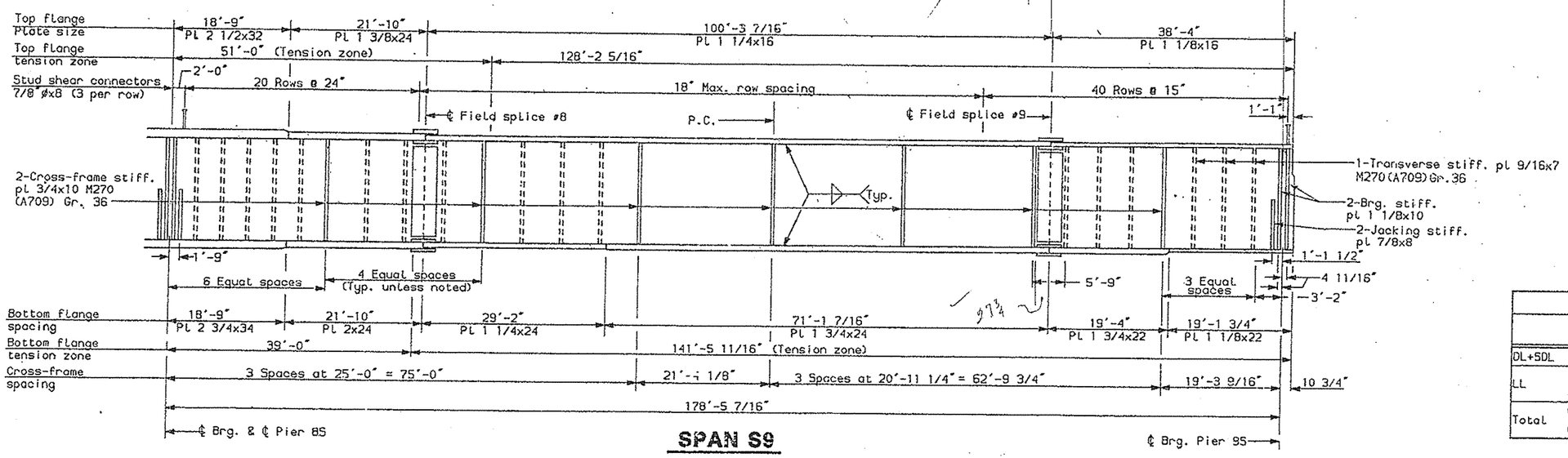

SPAN S9

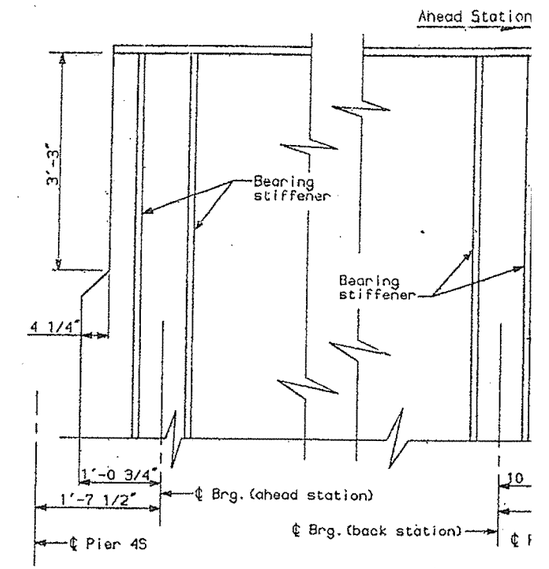

End of Girder Details

NOTES:

Threaded bar supports not shown.

TABLE OF UNFACTORED REACTIONS (kips)

		Pier 4S	Pier 5S	Pier 6S	Pier 7S	Pier 8S	Pi 9
DL+SDL		212	668	549	569	736	2
LL	(Max.)	92	173	168	171	183	9
	(Min.)	-6	-10	-22	-22	-10	-
Total	(Max.)	304	841	717	740	919	3
	(Min.)	206	658	527	547	726	2

TABLE OF FACTORED MAXIMUM MOMENTS (ft.-kips)

	Span 5S Positive Moment	Pier 5S Negative Moment	Span 6S Positive Moment	Pier 6S Negative Moment	Span 7S Positive Moment	Pier 7S Negative Moment	Span 8S Positive Moment	Pier 8S Negative Moment	Span 9S Positive Moment
DL	6100	-11926	2165	-7810	3696	-8581	2386	-14923	7209
SDL	2282	-4082	872	-2893	1253	-3254	1024	-4913	2646
LL+I (Positive)	5434	916	4292	1877	4778	1796	4589	942	5917
LL+I (Negative)	-1246	-7757	-2104	-6931	-2115	-7588	-2251	-8924	-1434
Total (Pos.LL+I)	13816	-15092	7329	-9016	9727	-10039	7999	-18894	15772
Total (Neg.LL+I)	7136	-23765	933	-17624	2834	-19423	1159	-28760	8421

TABLE OF FACTORED MAXIMUM SHEARS (kips)

	Span 5S Left	Span 5S Right	Span 6S Left	Span 6S Right	Span 7S Left	Span 7S Right	Span 8S Left	Span 8S Right	Span 9S Left	Span 9S Right
DL+SDL	276	-460	407	-345	368	-380	360	-443	506	-299
LL+I (Positive)	232	11	271	26	284	26	292	11	297	17
LL+I (Negative)	-11	-284	-11	-277	-26	-290	-26	-277	-11	-225
Total (Pos.LL+I)	508	-449	678	-319	652	-354	652	-432	803	-282
Total (Neg.LL+I)	265	-744	396	-622	342	-670	334	-720	495	-524

REG. NO.	STATE	PROJEC
1	MAINE	BPI-00

DESIGN-DETAILED DWP ELS 5-94
CHECKED PDB 5-94
REVISION
FIELD CHANGES

PLANS

SOUTH APPROACH
STATE OF MAINE
DEPARTMENT OF TRANSPOR

PORTLAND - S. PORTLA
OVER FORE RIV
CUMBERLAND CO

ELEVATION GIR
SPANS S5-S9

SHEET 46 OF 182 AUGUSTA, MAI

S5S9.S6:3b

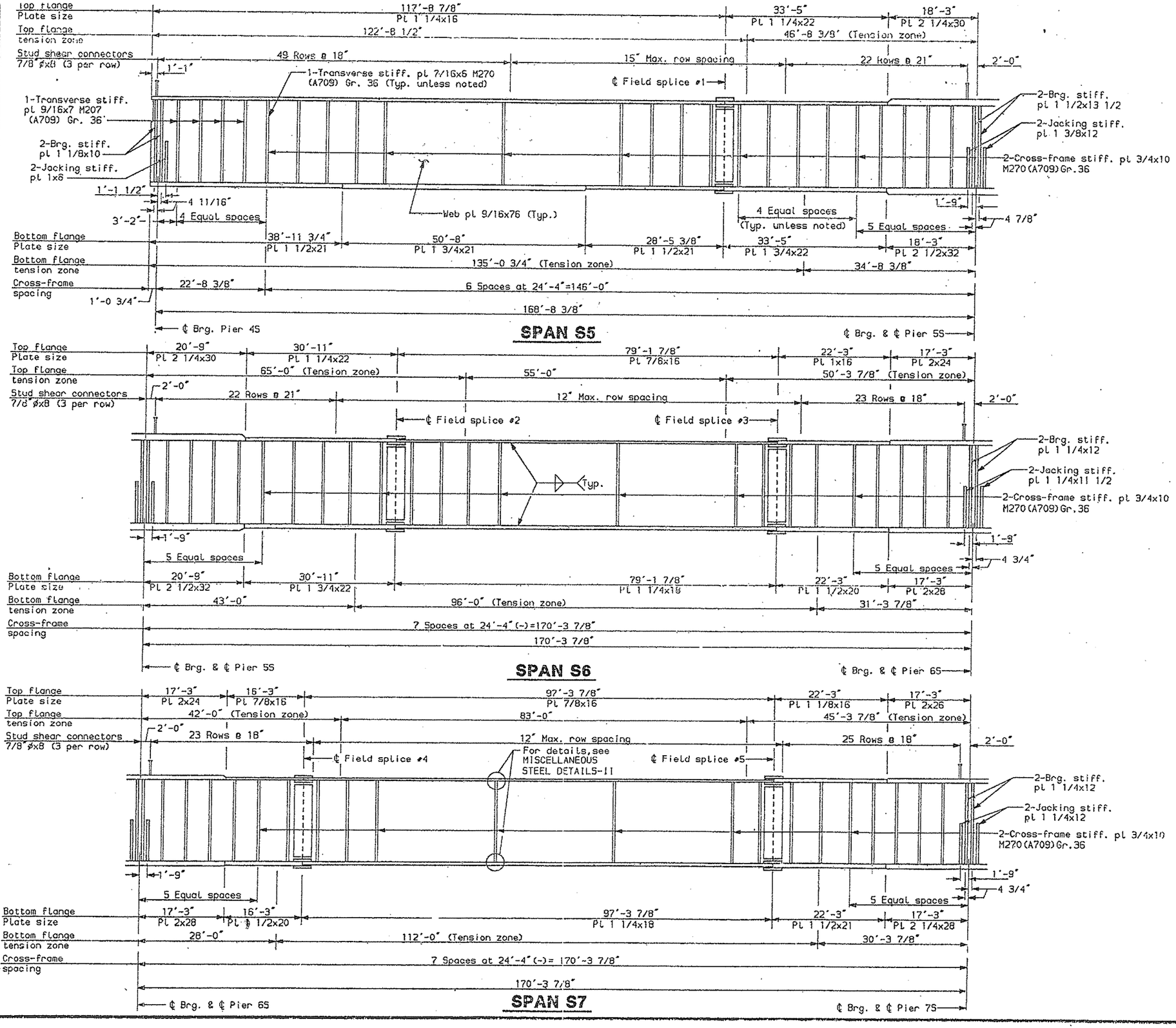

NOTES:

Threaded bar supports not shown.

REG. NO.		
1	MAINE	DPI-00

PLANS

DESIGN-DETAILED DMP 1 ELS 6-94
CHECKED PDD 6-94
REVISION
FIELD CHANGES

SOUTH APPROACH

STATE OF MAINE
DEPARTMENT OF TRANSPO

PORTLAND - S. PORTLA
OVER FORE RIV
CUMBERLAND CO

ELEVATION GIR
SPANS S5-S9

SHEET 47 OF 182 AUGUSTA, MAI

s5s9.ss4a

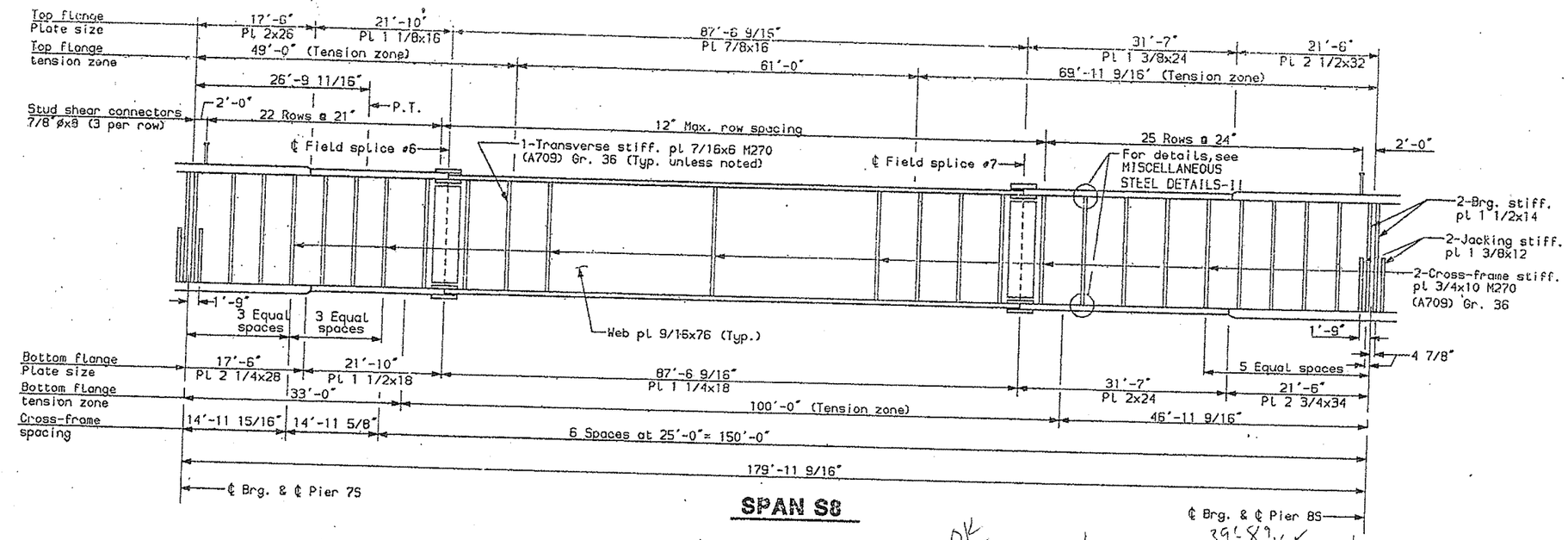

SPAN S8

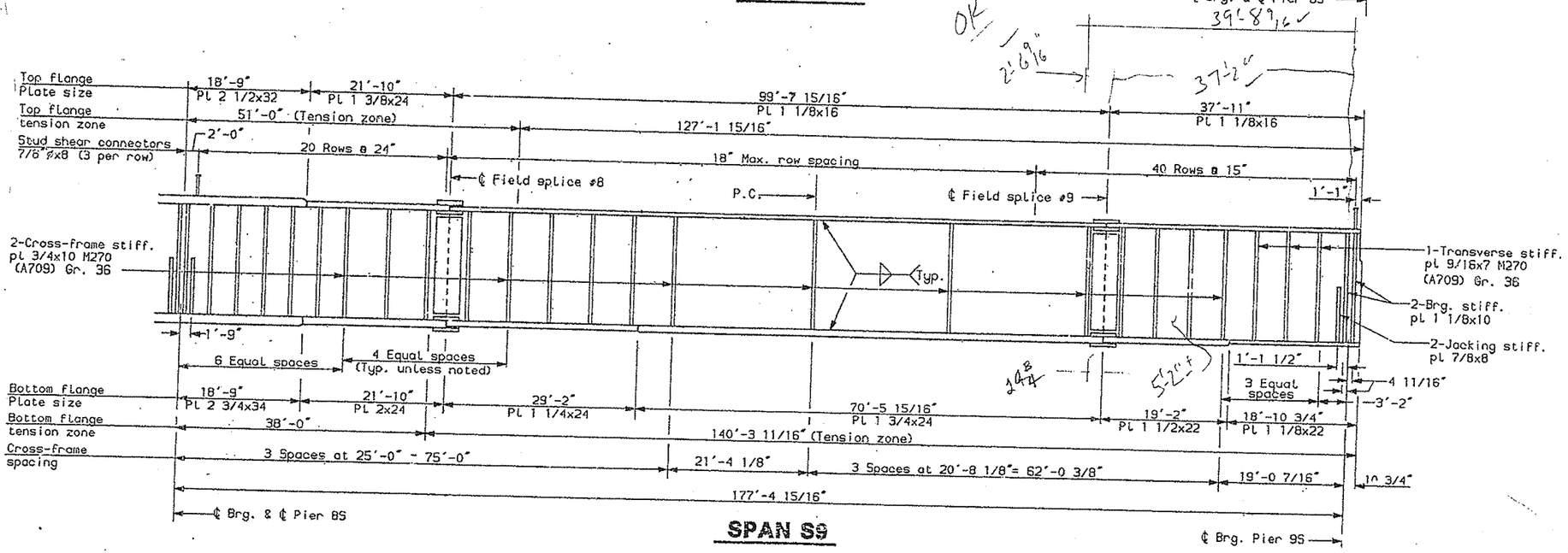

SPAN S9

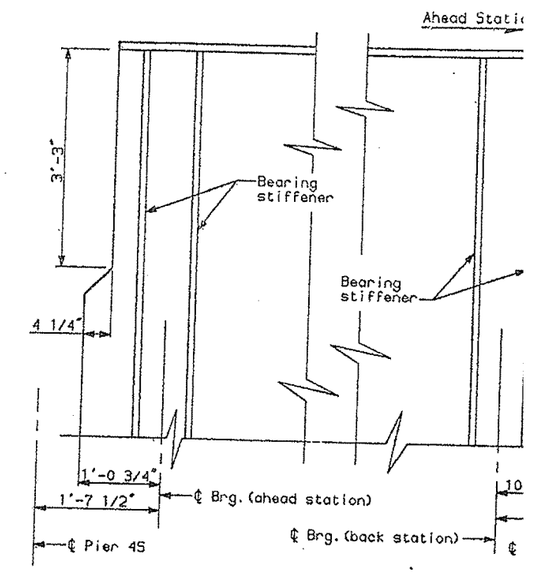

End of Girder Details

NOTES:

Threaded bar supports not shown

TABLE OF UNFACTORED REACTIONS (kips)

		Pier 4S	Pier 5S	Pier 6S	Pier 7S	Pier 8S	Pi 9S
DL+SDL		223	707	570	591	751	22
LL	(Max.)	90	182	172	176	186	9
	(Min.)	-7	-12	-25	-24	-11	-
Total	(Max.)	313	889	742	767	937	31
	(Min.)	216	695	545	567	740	21

TABLE OF FACTORED MAXIMUM MOMENTS (ft.-kips)

	Span 5S Positive Moment	Pier 5S Negative Moment	Span 5S Positive Moment	Pier 6S Negative Moment	Span 57 Positive Moment	Pier 7S Negative Moment	Span 58 Positive Moment	Pier 8S Negative Moment	Span 59 Positive Moment
DL	6250	-12368	2081	-7717	3605	-8588	2344	-14560	6773
SDL	2383	-4485	868	-3119	1278	-3513	1022	-5101	2594
LL+I (Positive)	5746	1034	4401	1837	4862	1870	4676	1053	6117
LL+I (Negative)	-1395	-8240	-2251	-7161	-2160	-7783	-2334	-9029	-1543
Total (Pos.LL+I)	14379	-15819	7350	-8999	9745	-10231	8042	-18608	15484
Total (Neg.LL+I)	7238	-25093	698	-17997	2723	-19884	1032	-28690	7824

TABLE OF FACTORED MAXIMUM SHEARS (kips)

	Span 5S Left	Span 5S Right	Span 5R Left	Span 56 Right	Span 57 Left	Span 57 Right	Span 58 Left	Span 58 Right	Span 59 Left	Span 59 Right
DL+SDL	289	-490	428	-359	382	-397	372	-456	515	-294
LL+I (Positive)	225	15	284	30	288	30	308	13	312	17
LL+I (Negative)	-17	-306	-15	-286	-30	-306	-30	-284	-13	-230
Total (Pos.LL+I)	514	-475	712	-329	670	-367	680	-443	827	-277
Total (Neg.LL+I)	272	-796	413	-645	352	-703	342	-740	502	-524

F.H.W.A. REG. NO.	STATE	PRO
1	MAINE	DPI

DESIGN-DETAILED	DMP	ELS	6-94
CHECKED	PDB		6-94
REVISION			
FIELD CHANGES			

PLANS

s5a9.sa4b

SOUTH APPROACH S

STATE OF MAINE
DEPARTMENT OF TRANSPOR

PORTLAND - S. PORTLAN
OVER FORE RIVE
CUMBERLAND COU

ELEVATION GIRD
SPANS S5-S9 -

REG. NO.	STATE	PROJECT
1	MAINE	DPI-000

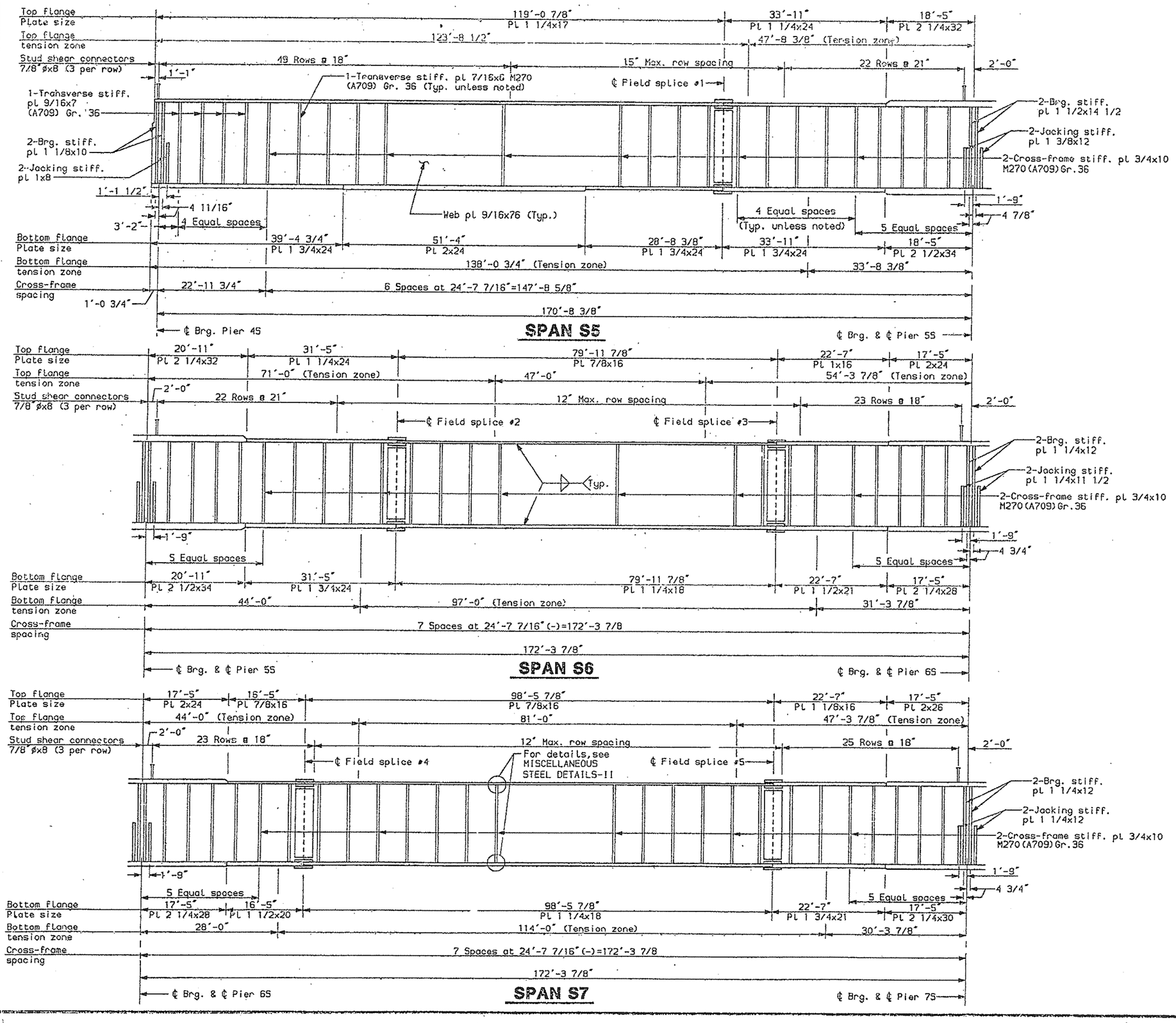

NOTES:

Threaded bar supports not shown.

DESIGN-DETAILED	DWP	1	ELS	6-94
CHECKED			PCB	6-94
REVISION				
FIELD CHANGES				

PLANS

s5s9.ss5a

SOUTH APPROACH

STATE OF MAINE
DEPARTMENT OF TRANSPO

PORTLAND - S. PORTLA
OVER FORE RIV
CUMBERLAND CO

ELEVATION GIR
SPANS S5-S9

SHEET 49 OF 182 AUGUSTA, MA

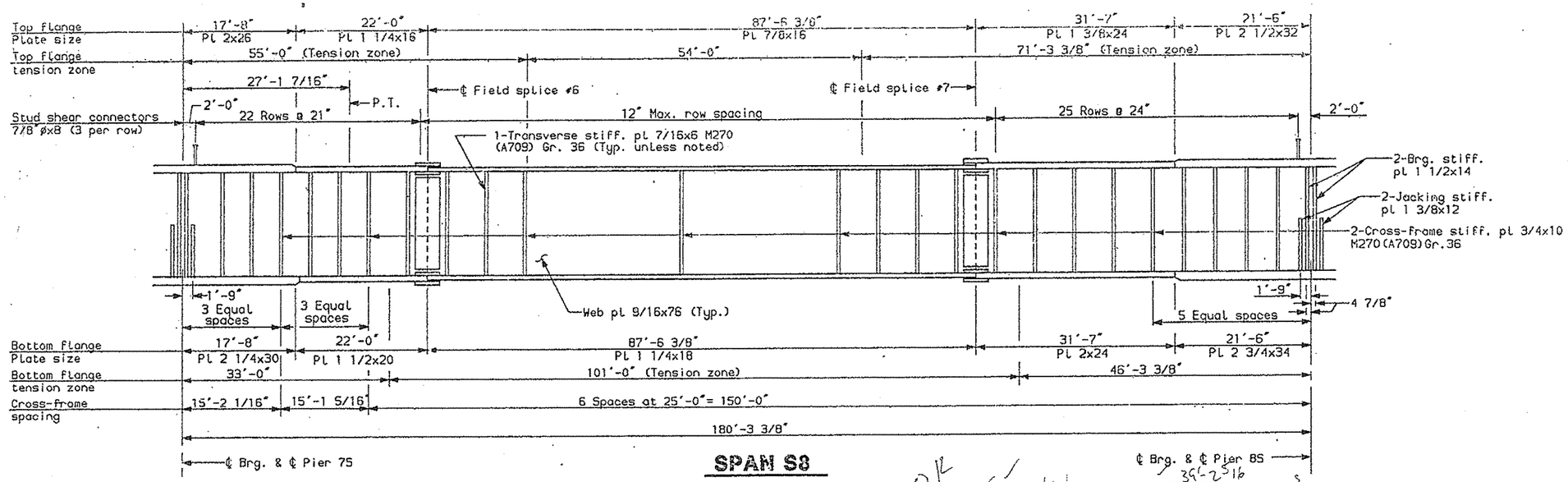

SPAN S8

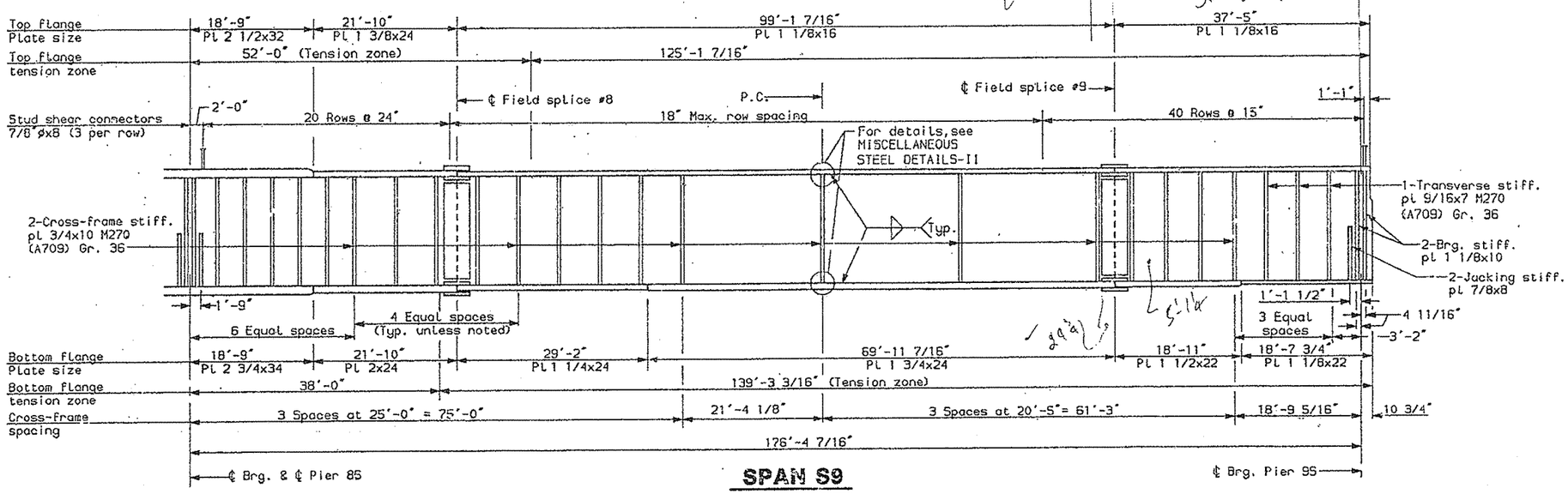

SPAN S9

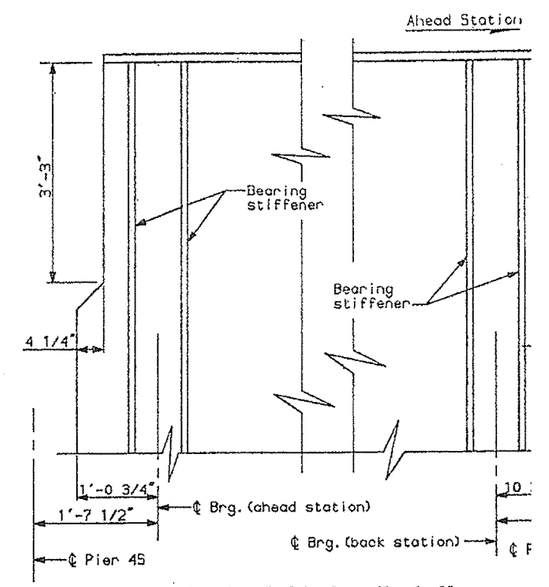

End of Girder Details

NOTES:

Threaded bar supports not shown.

TABLE OF UNFACTORED REACTIONS (kips)

		Pier 4S	Pier 5S	Pier 6S	Pier 7S	Pier 8S	P
DL+SDL		220	662	524	550	682	
LL	(Max.)	93	198	189	191	200	
	(Min.)	-9	-16	-33	-31	-15	
Total	(Max.)	313	860	713	741	882	
	(Min.)	211	646	491	519	667	

TABLE OF FACTORED MAXIMUM MOMENTS (ft.-kips)

	Span 5S Positive Moment	Pier 5S Negative Moment	Span 6S Positive Moment	Pier 6S Negative Moment	Span 7S Positive Moment	Pier 7S Negative Moment	Span 8S Positive Moment	Pier 8S Negative Moment	Span 9S Positive Moment
DL	6798	-12423	1980	-7792	3702	-8640	2253	-14043	6520
SDL	2623	-4146	881	-2816	1286	-3159	1004	-4514	2548
LL+I (Positive)	7167	1291	5250	2321	5542	2297	5295	1315	6988
LL+I (Negative)	-1911	-9328	-2888	-8210	-2585	-8756	-2780	-10027	-1846
Total (Pos.LL+I)	16588	-15278	8111	-8287	10530	-9502	8552	-17242	16056
Total (Neg.LL+I)	7510	-25897	-27	-18818	2403	-20555	477	-28584	7222

TABLE OF FACTORED MAXIMUM SHEARS (kips)

	Span 5S Left	Span 5S Right	Span 6S Left	Span 6S Right	Span 7S Left	Span 7S Right	Span 8S Left	Span 8S Right	Span 9S Left	Span 9S Right
DL+SDL	286	-462	399	-329	354	-367	348	-412	468	-273
LL+I (Positive)	234	20	303	41	323	39	327	17	327	22
LL+I (Negative)	-22	-327	-20	-319	-41	-334	-39	-301	-17	-232
Total (Pos.LL+I)	520	-442	702	-288	677	-328	675	-395	795	-251
Total (Neg.LL+I)	264	-789	379	-648	313	-701	309	-713	451	-505

DESIGN-DETAILED	DMP	ELS	6-94	
CHECKED	PDS		6-94	
REVISION				
FIELD CHANGES				

PLANS

SOUTH APPROACH

STATE OF MAINE
DEPARTMENT OF TRANSPO

PORTLAND - S. PORTLA
OVER FORE RI
CUMBERLAND CO

ELEVATION GIR
SPANS S5-S9

SHEET 50 OF 182 AUGUSTA, MA

S5S9.S5S6

REC. NO.	STATE	PROJECT
1	MAINE	DPI-00

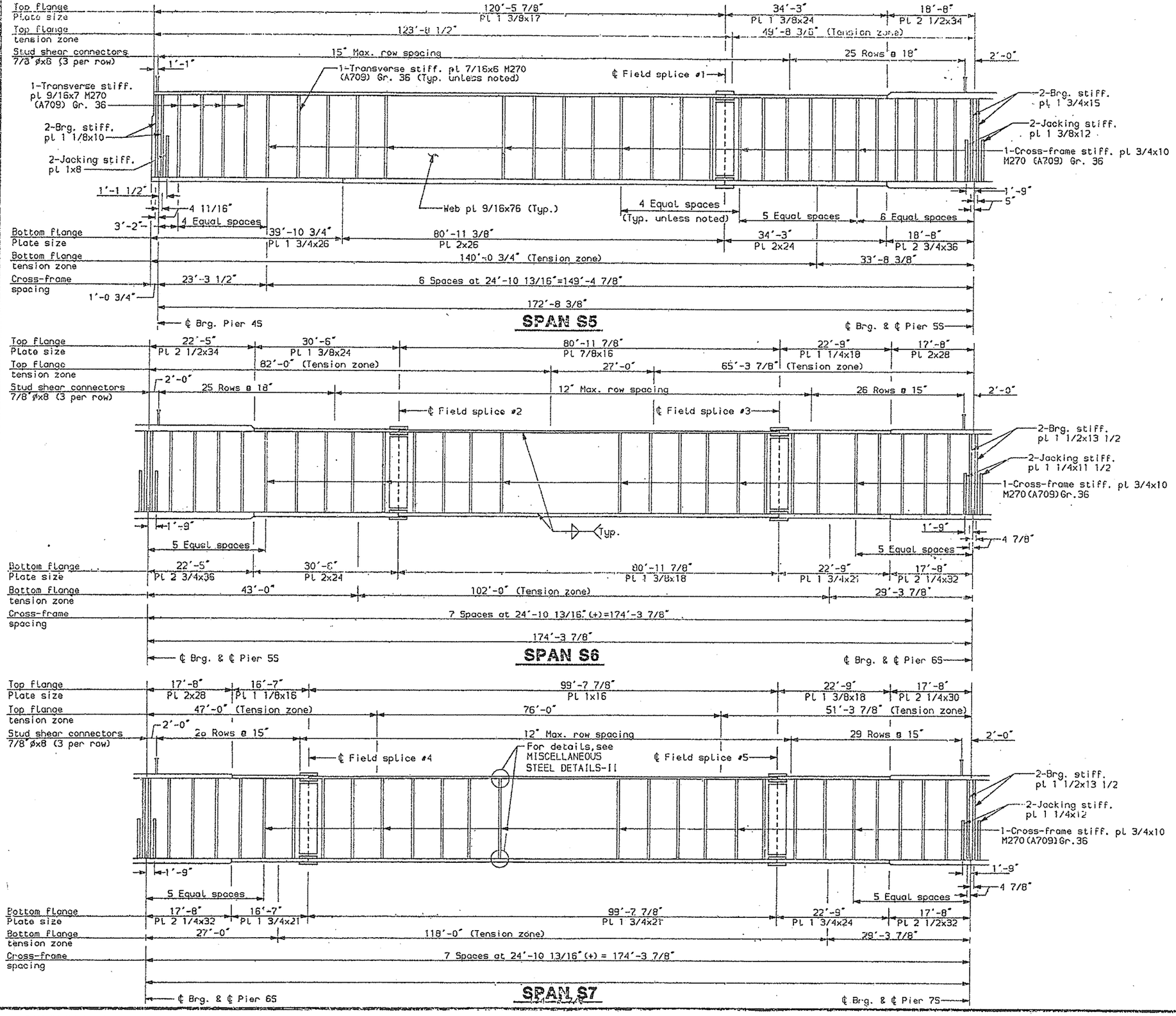

NOTES:

Threaded bar supports not shown.

PROJECT DESIGN ENGINEER	BY	DATE
DESIGN-DETAILED	DWP	6-94
CHECKED	ELS	6-94
REVISION	PDB	
FIELD CHANGES		

PLANS

SOUTH APPROACH

STATE OF MAINE
DEPARTMENT OF TRANSPO

PORTLAND - S. PORTL
OVER FORE RI
CUMBERLAND CO

ELEVATION GIR
SPANS S5-S

SHEET 51 OF 182 AUGUSTA, MA

s5s9.ss6a

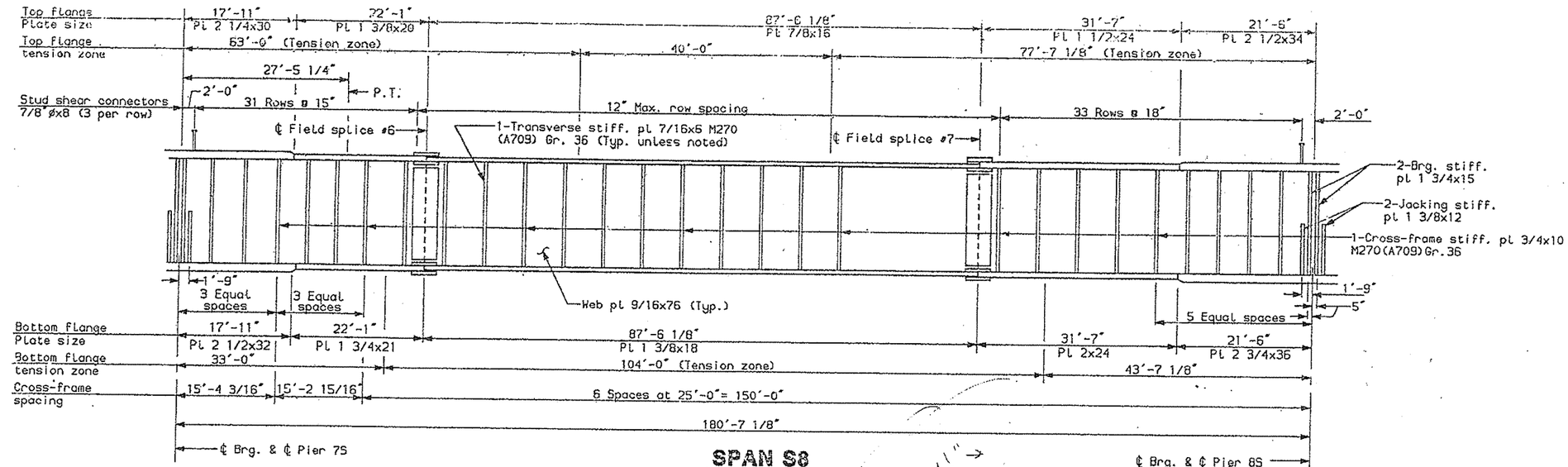

SPAN S8

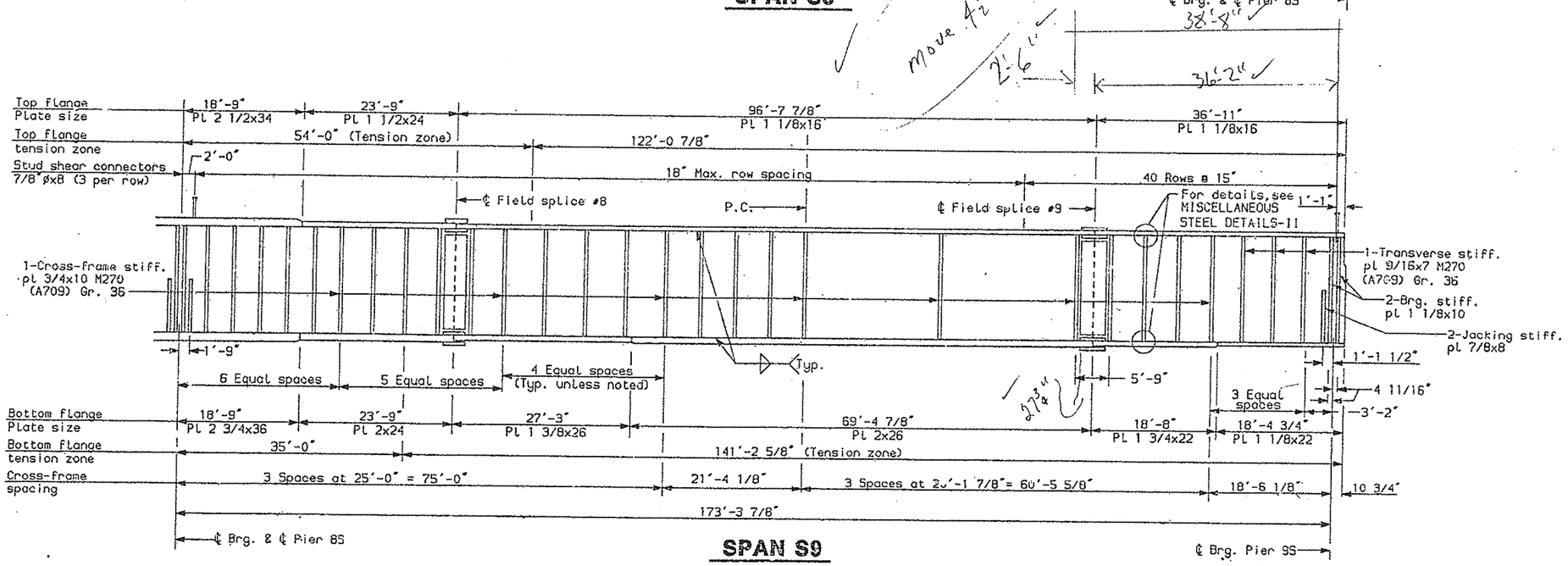

SPAN S9

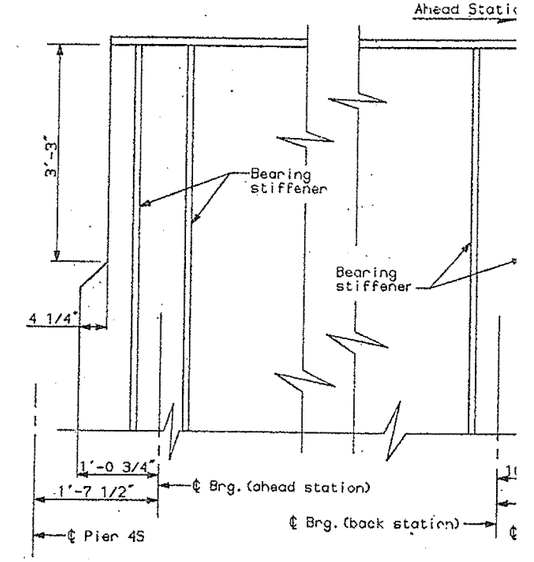

End of Girder Details

NOTES:

Threaded bar supports not shown.

TABLE OF UNFACTORED REACTIONS (kips)

		Pier 4S	Pier 5S	Pier 6S	Pier 7S	Pier 8S
DL+SDL		243	676	551	573	695
LL	(Max.)	108	213	204	208	221
	(Min.)	-18	-28	-45	-45	-32
Total	(Max.)	351	889	755	781	916
	(Min.)	225	648	506	528	663

TABLE OF FACTORED MAXIMUM MOMENTS (ft.-kips)

	Span 5S Positive Moment	Pier 5S Negative Moment	Span 6S Positive Moment	Pier 6S Negative Moment	Span 7S Positive Moment	Pier 7S Negative Moment	Span 8S Positive Moment	Pier 8S Negative Moment	Span 9S Positive Moment
DL	7214	-12942	2050	-8016	4170	-9049	2237	-13313	6419
SDL	3050	-5116	1079	-3539	1660	-4012	1197	-5105	2708
LL+I (Positive)	9297	2178	7564	3367	8015	3460	7490	2277	8977
LL+I (Negative)	-2975	-11622	-4522	-10257	-4028	-11156	-4307	-11795	-3183
Total (Pos.LL+I)	19561	-15880	10693	-8188	13845	-9601	10924	-16141	18104
Total (Neg.LL+I)	7289	-29680	-1393	-21812	1802	-24217	-873	-30213	5944

TABLE OF FACTORED MAXIMUM SHEARS (kips)

	Span 5S Left	Span 5S Right	Span 6S Left	Span 6S Right	Span 7S Left	Span 7S Right	Span 8S Left	Span 8S Right	Span 9S Left	Span 9S Right
DL+SDL	316	-476	400	-339	373	-389	356	-423	476	-276
LL+I (Positive)	273	35	321	56	353	56	360	39	358	50
LL+I (Negative)	-46	-358	-35	-338	-56	-353	-56	-332	-39	-258
Total (Pos.LL+I)	589	-441	721	-283	726	-333	716	-384	834	-226
Total (Neg.LL+I)	270	-834	365	-677	317	-742	300	-755	437	-534

REG. NO.	STATE	PROJ
1	MAINE	DPI-

SOUTH APPROACH

STATE OF MAIN
DEPARTMENT OF TRANSP

PORTLAND - S. PORTL
OVER FORE RI
CUMBERLAND CO

ELEVATION GI
SPANS S5-S

SHEET 52 OF 182 AUGUSTA, MA

REC'D	ENGINEER	DWP	ELS	6-94
	DESIGN-DETAILED	PDB		6-94
	CHECKED			
	REVISION			
	FIELD CHANGES			

PLANS

S5g9.ss6b

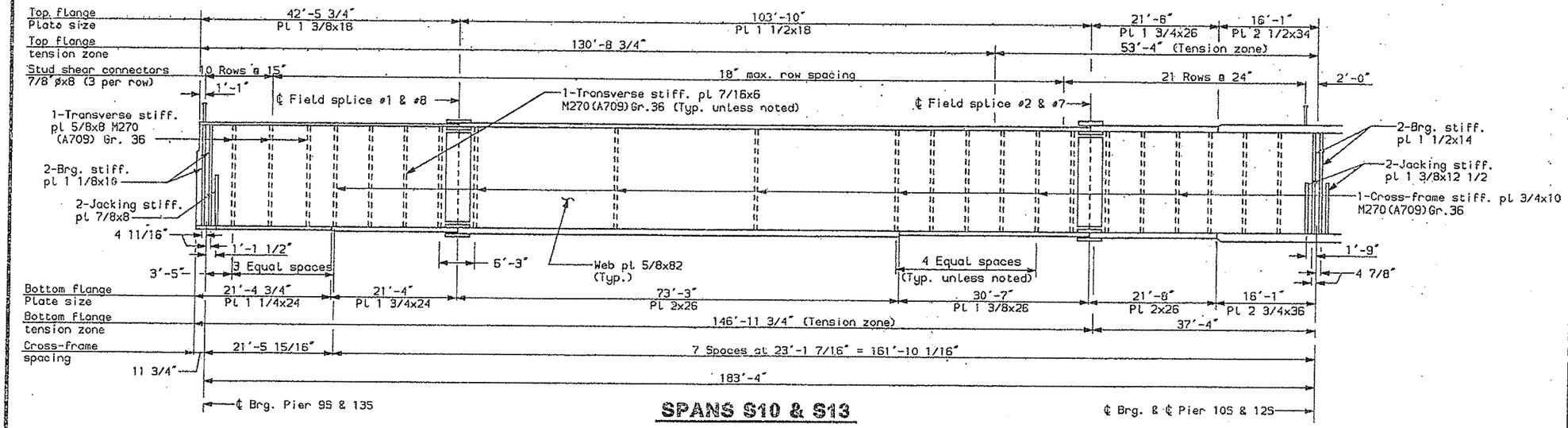

SPANS S10 & S13

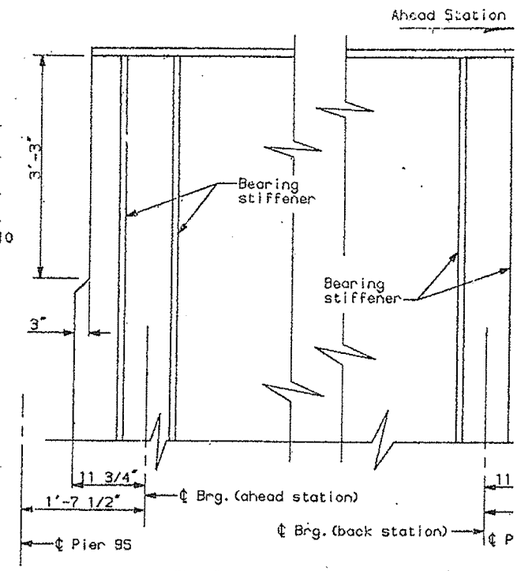

End of Girder Details

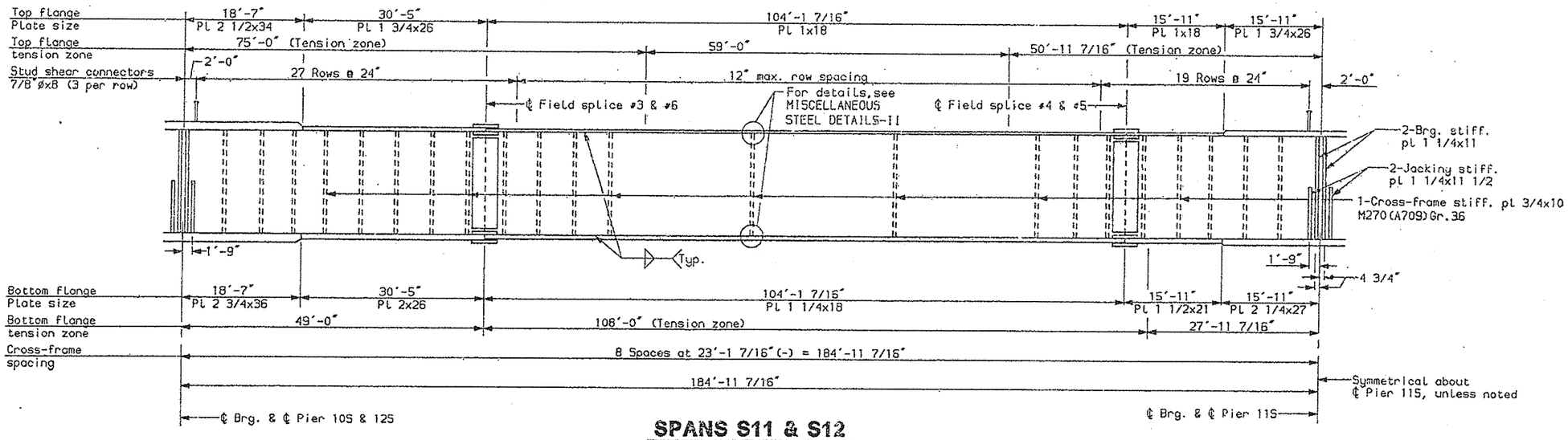

SPANS S11 & S12

NOTES:

Utility supports not shown.

TABLE OF FACTORED MAXIMUM MOMENTS (ft.-kips)				
	Spans S10 & S13 Positive Moment	Piers 10S & 12S Negative Moment	Spans S11 & S12 Positive Moment	Pier 11S Negative Moment
DL	8944	-16549	3091	-7887
SDL	3530	-5901	1362	-3527
LL+I (Positive)	8684	2678	6578	3718
LL+I (Negative)	-3510	-10439	-4182	-8712
Total (Pos.LL+I)	21158	-19772	11031	-7696
Total (Neg.LL+I)	8954	-32889	271	-20126

TABLE OF FACTORED MAXIMUM SHEARS (kips)				
	Spans S10 Left & S13 Right	Spans S10 Right & S13 Left	Spans S11 Left & S12 Right	Spans S11 Right & S12 Left
DL+SDL	343	-521	450	-361
LL+I (Positive)	204	41	238	61
LL+I (Negative)	-52	-271	-41	-256
Total (Pos.LL+I)	547	-480	688	-300
Total (Neg.LL+I)	291	-792	409	-617

TABLE OF UNFACTORED REACTIONS (kips)				
		Piers 9S & 13S	Piers 10S & 12S	Pier 11S
DL+SDL		264	752	555
LL	(Max.)	81	158	147
	(Min.)	-21	-34	-49
Total	(Max.)	345	910	702
	(Min.)	243	718	506

DESIGN-DETAILED	DWP	ELS	5-94
CHECKED	PGB		6-94
REVISION			
FIELD CHANGES			

PLANS

SOUTH APPROACH

STATE OF MAINE
DEPARTMENT OF TRANSPO

PORTLAND - S. PORTLA
OVER FORE RI
CUMBERLAND CO

ELEVATION GIR
SPANS S10-

s10s13.ss1

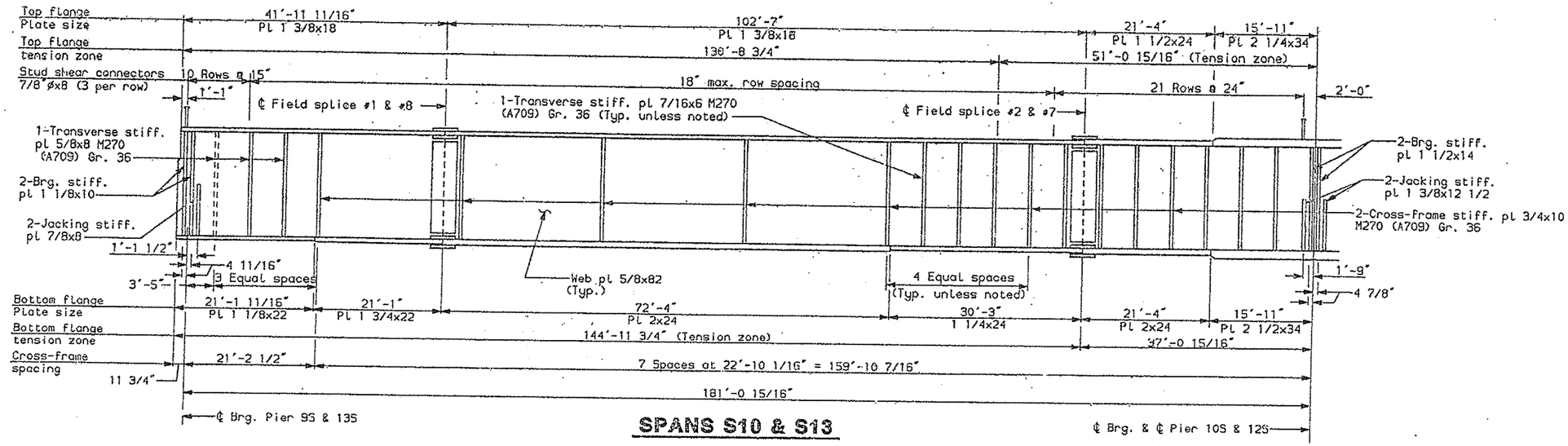

SPANS S10 & S13

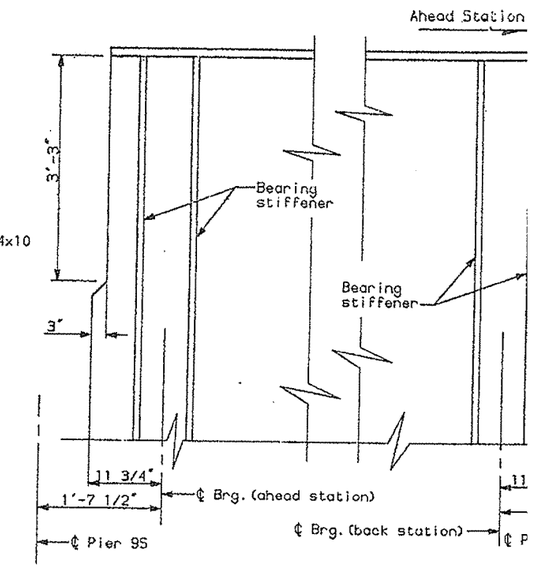

End of Girder Details

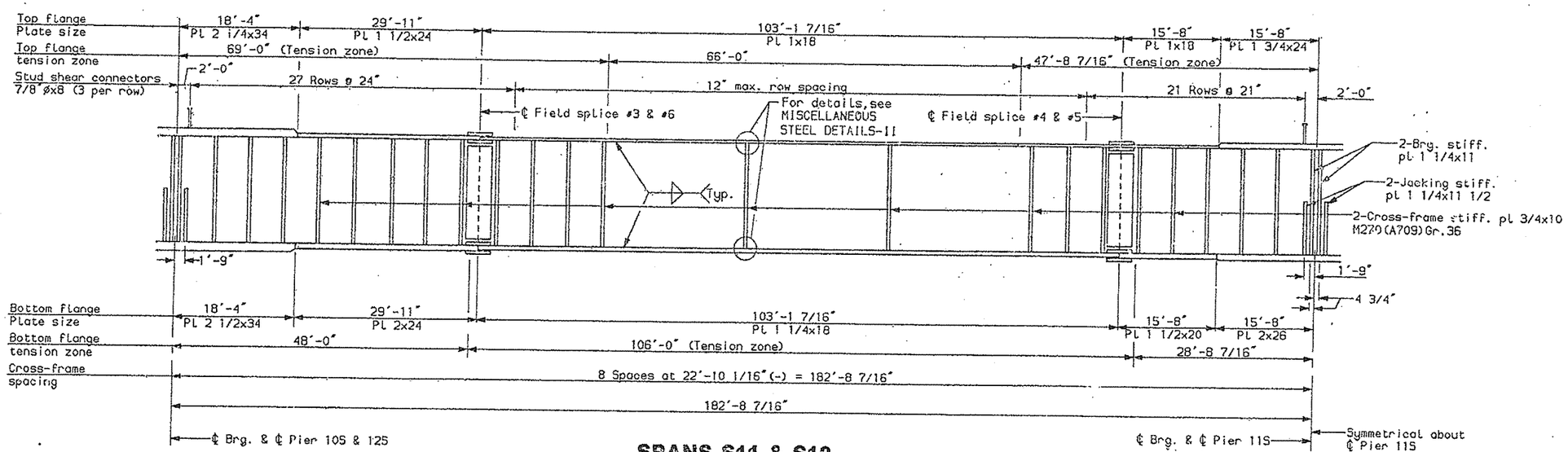

SPANS S11 & S12

TABLE OF FACTORED MAXIMUM MOMENTS (ft.-kips)	Spans S10 & S13 Positive Moment	Piers 10S & 12S Negative Moment	Spans S11 & S12 Positive Moment	Pier 11S Negative Moment
DL	8297	-15640	2878	-7778
SDL	3023	-4960	1167	-2912
LL+I (Positive)	7044	1417	5259	2481
LL+I (Negative)	-2069	-9234	-2849	-7661
Total (Pos.LL+I)	18364	-19183	9304	3209
Total (Neg.LL+I)	9251	-29834	1196	-18351

TABLE OF FACTORED MAXIMUM SHEARS (kips)	Spans S10 Left & S13 Right	Spans S10 Right & S13 Left	Spans S11 Left & S12 Right	Spans S11 Right & S12 Left
DL+SDL	319	-517	452	-352
LL+I (Positive)	232	22	297	41
LL+I (Negative)	-22	-316	-22	-308
Total (Pos.LL+I)	551	-495	749	-311
Total (Neg.LL+I)	297	-833	430	-660

TABLE OF UNFACTORED REACTIONS (kips)		Piers 9S & 13S	Piers 10S & 12S	Pier 11S
DL+SDL		245	752	541
LL	(Max.)	92	194	181
	(Min.)	-10	-18	-34
Total	(Max.)	337	946	722
	(Min.)	235	734	507

NOTES:

Utility and threaded bar supports n

F.H.W.A. REG. NO.	STATE	PROJE
1	MAINE	DPI-C

DESIGN-DETAILED	DKP	6-94
CHECKED	POB	6-94
REVISION	ELS	
FIELD CHANGES		

PLANS

SOUTH APPROACH

STATE OF MAINE
DEPARTMENT OF TRANSPO

PORTLAND - S. PORTLA
OVER FORE RIV
CUMBERLAND CO

ELEVATION GIR
SPANS S10-S

SHEET 54 OF 182 AUGUSTA, MAI

e10s13.ss2

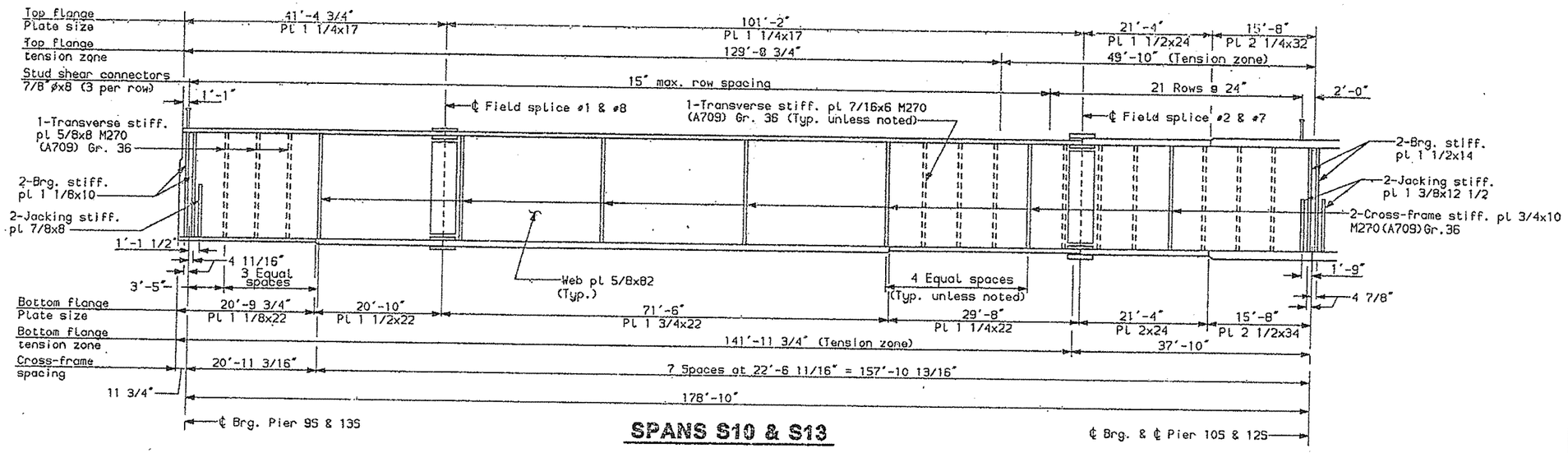

SPANS S10 & S13

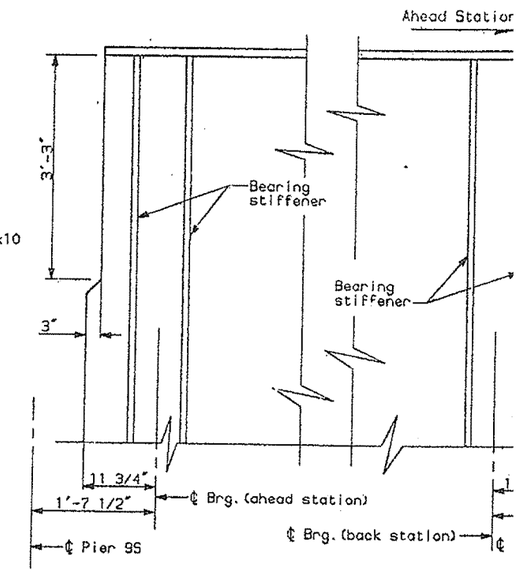

End of Girder Details

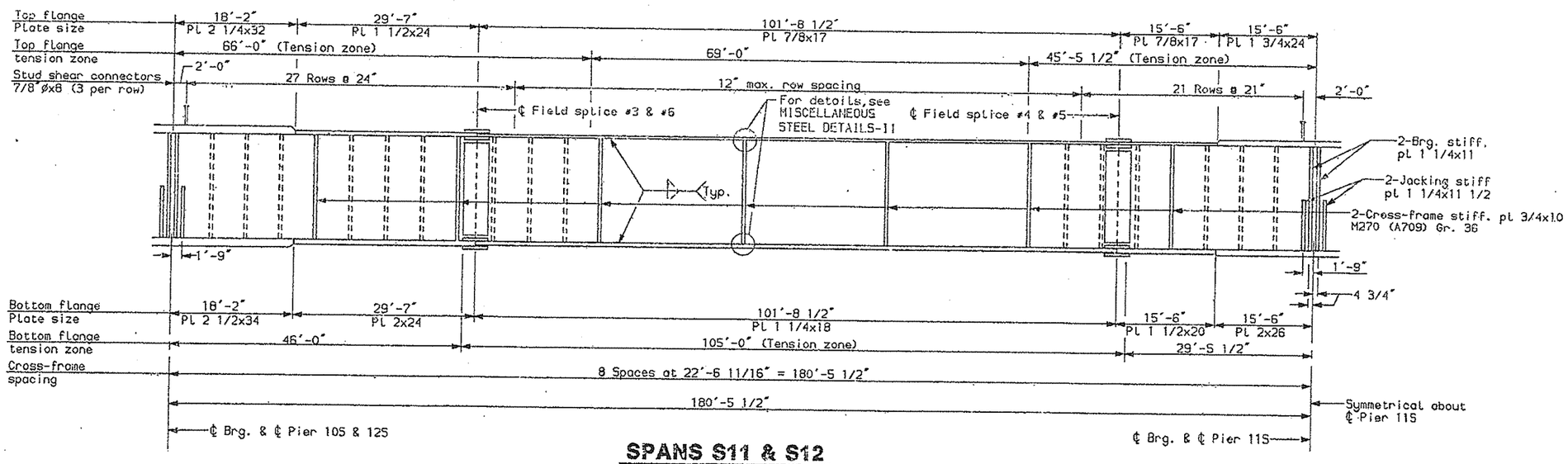

SPANS S11 & S12

NOTES:

Threaded bar supports not sh

TABLE OF FACTORED MAXIMUM MOMENTS (ft.-kips)				
	Spans S10 & S13 Positive Moment	Piers 10S & 12S Negative Moment	Spans S11 & S12 Positive Moment	Pier 11S Negative Moment
DL	7396	-15155	2800	-7787
SDL	2800	-4947	1127	-3013
LL+I (Positive)	6247	1038	4773	2030
LL+I (Negative)	-1580	-8951	-2342	-7490
Total (Pos.LL+I)	16443	-19064	8700	-8770
Total (Neg.LL+I)	8616	-29053	1585	-18290

TABLE OF FACTORED MAXIMUM SHEARS (kips)				
	Spans S10 Left & S13 Right	Spans S10 Right & S13 Left	Spans S11 Left & S12 Right	Spans S11 Right & S12 Left
DL+SDL	298	-511	458	-361
LL+I (Positive)	223	13	284	33
LL+I (Negative)	-17	-308	-13	-297
Total (Pos.LL+I)	521	-498	742	-328
Total (Neg.LL+I)	281	-819	445	-658

TABLE OF UNFACTORED REACTIONS (kips)				
		Piers 9S & 13S	Piers 10S & 12S	Pier 11S
DL+SDL		229	750	556
LL	(Max.)	90	186	175
	(Min.)	-7	-12	-26
Total	(Max.)	319	936	731
	(Min.)	222	738	530

F.H.W.A. REG. NO.	STATE	PROJ
1	MAINE	DPI-

PROJECT DESIGN ENGINEER	BY	DATE
DESIGN-DETAILED	DJP	6-94
CHECKED	ELS	6-94
REVISION	PDB	
FIELD CHANGES		

PLANS

s10s13.ss3

SOUTH APPROACH

STATE OF MAIN
DEPARTMENT OF TRANSP

PORTLAND - S. PORTL
OVER FORE RI
CUMBERLAND CO

ELEVATION GE
SPANS S10-

SHEET 55 OF 182 AUGUSTA, MA

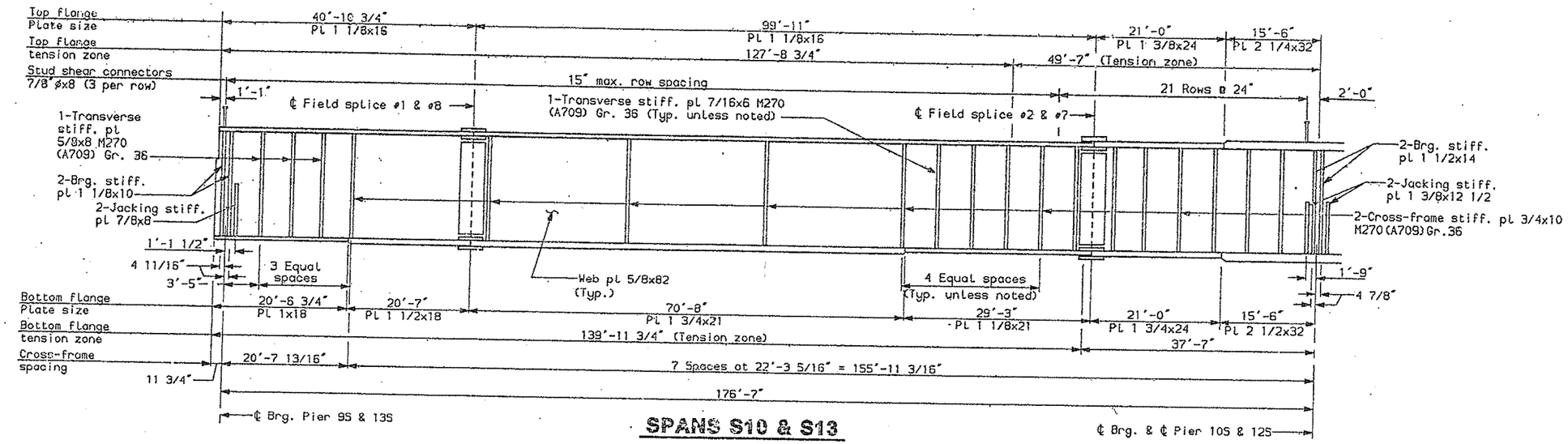

SPANS S10 & S13

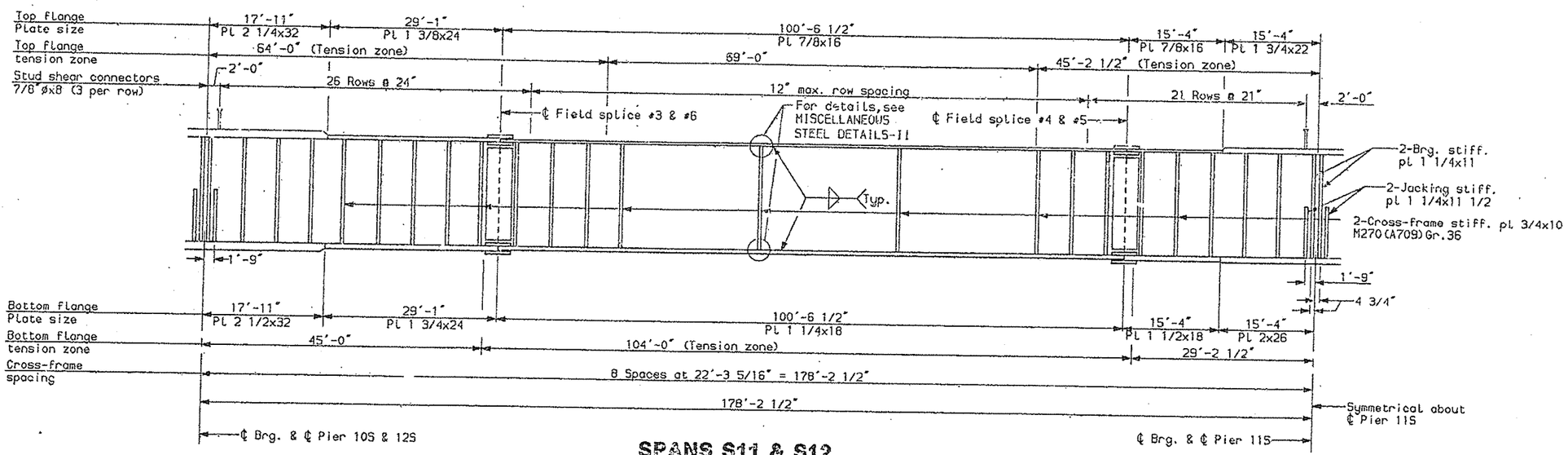

SPANS S11 & S12

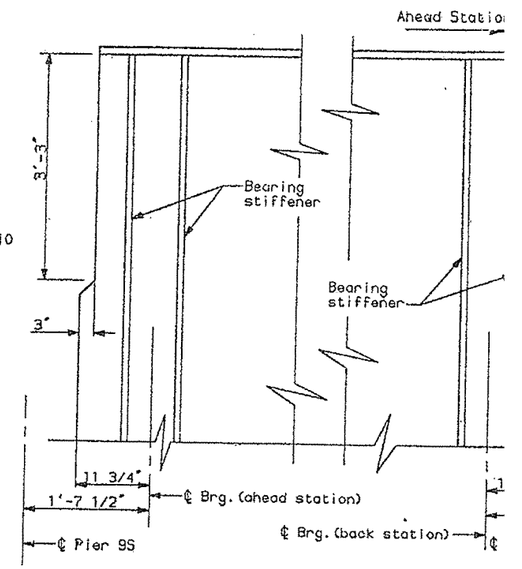

End of Girder Details

NOTES:

Threaded bar supports not shown

TABLE OF FACTORED MAXIMUM MOMENTS (ft.-kips)	Spans S10 & S13 Positive Moment	Piers 10S & 12S Negative Moment	Spans S11 & S12 Positive Moment	Pier 11S Negative Moment
DL	6938	-14251	2764	-7524
SDL	2618	-4978	1118	-3106
LL+I (Positive)	5967	925	4687	1824
LL+I (Negative)	-1380	-8610	-2230	-7137
Total (Pos.LL+I)	15523	-18304	8569	-8806
Total (Neg.LL+I)	8176	-27839	1652	-17767

TABLE OF FACTORED MAXIMUM SHEARS (kips)	Spans S10 Left & S13 Right	Spans S10 Right & S13 Left	Spans S11 Left & S12 Right	Spans S11 Right & S12 Left
DL+SDL	295	-507	458	-368
LL+I (Positive)	230	13	284	28
LL+I (Negative)	-16	-308	-13	-295
Total (Pos.LL+I)	525	-494	742	-340
Total (Neg.LL+I)	279	-815	445	-663

TABLE OF UNFACTORED REACTIONS (kips)		Piers 9S & 13S	Piers 10S & 12S	Pier 11S
DL+SDL		227	747	567
LL	(Max.)	91	180	170
	(Min.)	-6	-11	-23
Total	(Max.)	318	927	737
	(Min.)	221	736	544

F.H.W.A. REG. NO.	STATE	PRO
1	MAINE	DPI

DESIGN-DETAILED	DWP	ELS	6-94
CHECKED	PDB		6-94
REVISION			
FIELD CHANGES			

PLANS

810813.ss4

SOUTH APPROACH

STATE OF MAINE
DEPARTMENT OF TRANSPO

PORTLAND - S. PORTLA
OVER FORE RI
CUMBERLAND CO

ELEVATION GIR
SPANS S10-S

SHEET 56 OF 182 AUGUSTA, MA

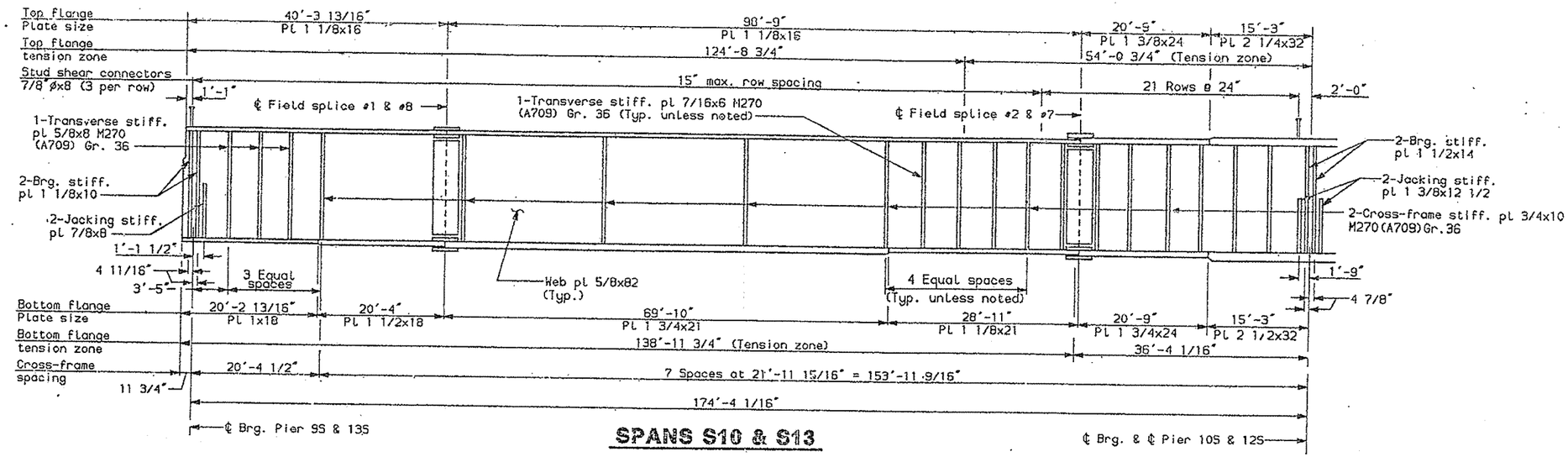

SPANS S10 & S13

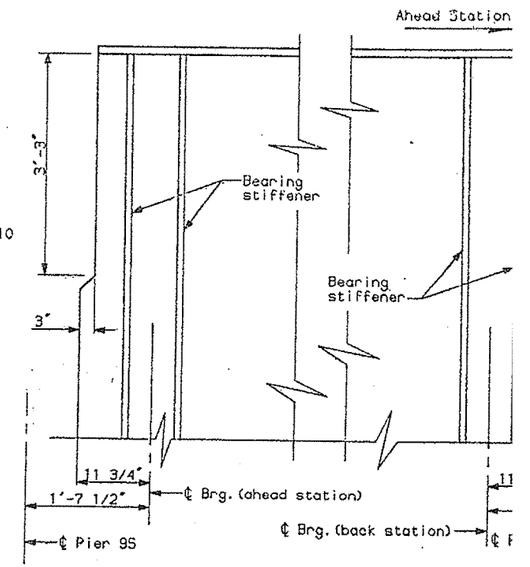

End of Girder Details

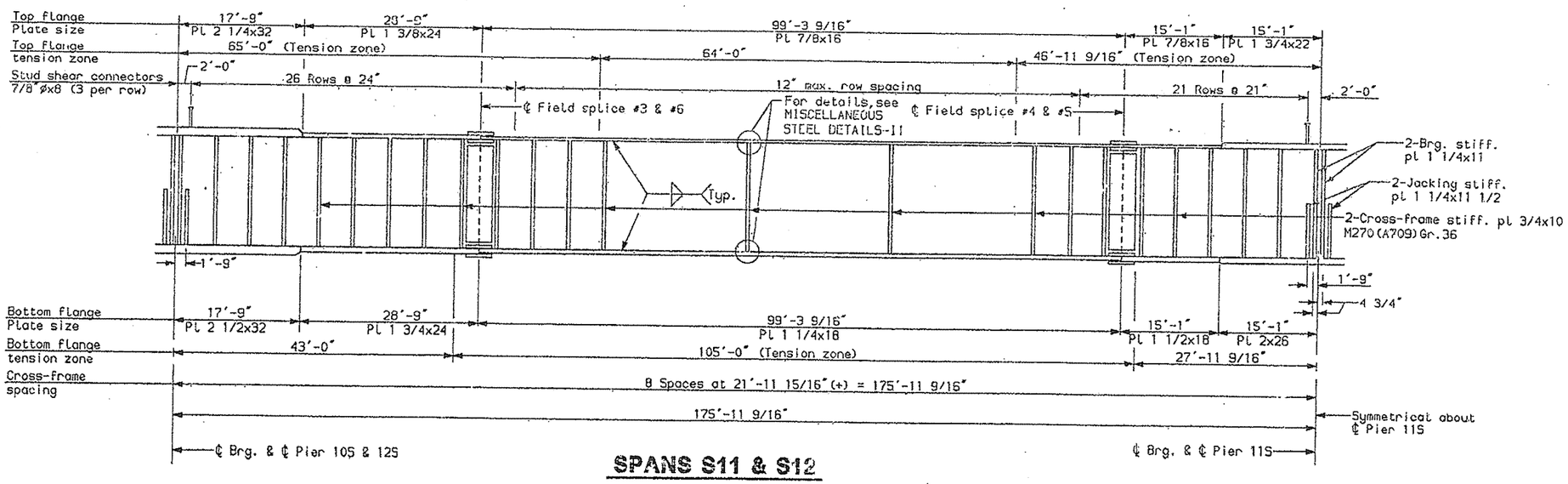

SPANS S11 & S12

NOTES:

Threaded bar supports not shown.

TABLE OF FACTORED MAXIMUM MOMENTS (ft.-kips)	Spans S10 & S13 Positive Moment	Piers 10S & 12S Negative Moment	Spans S11 & S12 Positive Moment	Pier 11S Negative Moment
DL	6587	-13402	2657	-7197
SDL	2527	-4330	1089	-2648
LL+I (Positive)	6777	1103	5202	2173
LL+I (Negative)	-1664	-9419	-2572	-7846
Total (Pos.LL+I)	15891	-16629	8948	-7672
Total (Neg.LL+I)	7450	-27151	1174	-17691

TABLE OF FACTORED MAXIMUM SHEARS (kips)	Spans S10 Left & S13 Right	Spans S10 Right & S13 Left	Spans S11 Left & S12 Right	Spans S11 Right & S12 Left
DL+SDL	268	-451	496	-325
LL+I (Positive)	232	17	297	35
LL+I (Negative)	-20	-316	-17	-310
Total (Pos.LL+I)	500	-434	703	-290
Total (Neg.LL+I)	248	-767	389	-635

TABLE OF UNFACTORED REACTIONS (kips)		Piers 9S & 13S	Piers 10S & 12S	Pier 11S
DL+SDL		206	664	499
LL	(Max.)	92	193	181
	(Min.)	-8	-14	-29
Total	(Max.)	298	857	680
	(Min.)	198	650	470

REG. NO.	STATE	FINAL
1	MAINE	DPI-(

DESIGN-DETAILED	DWP	ELS	5-94
CHECKED	PDB		6-94
REVISION			
FIELD CHANGES			

ENGINEER

PLANS

s10s13_ss5

SOUTH APPROACH

STATE OF MAINE
DEPARTMENT OF TRANSPO

PORTLAND - S. PORTLA
OVER FORE RI
CUMBERLAND CO

ELEVATION GIR
SPANS S10-S

SHEET 57 OF 182 AUGUSTA, MA

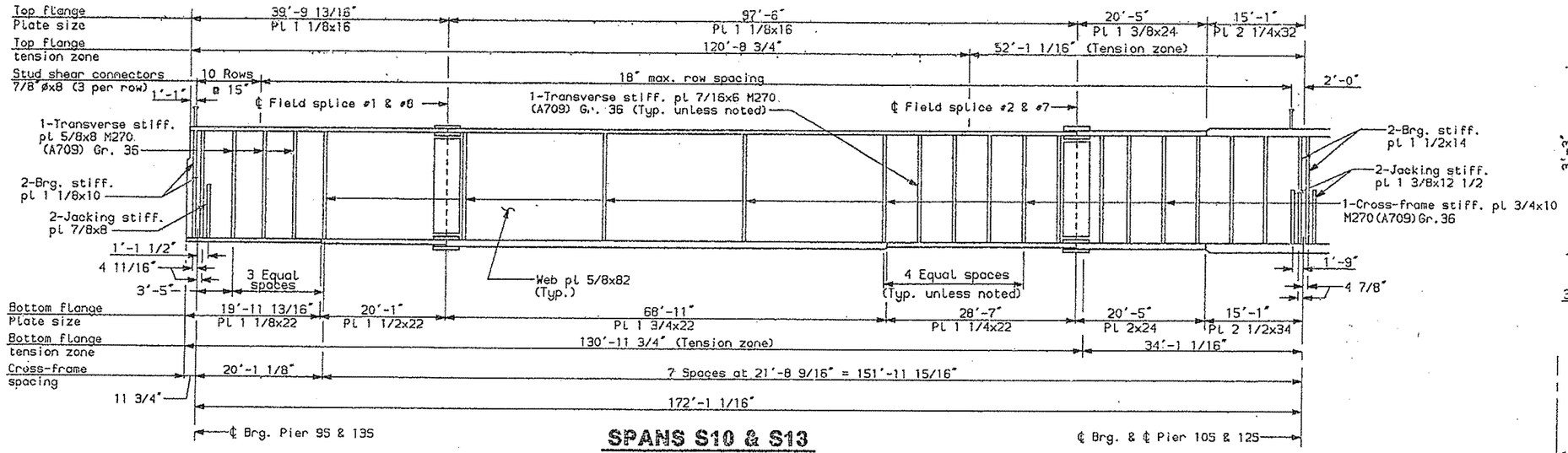

SPANS S10 & S13

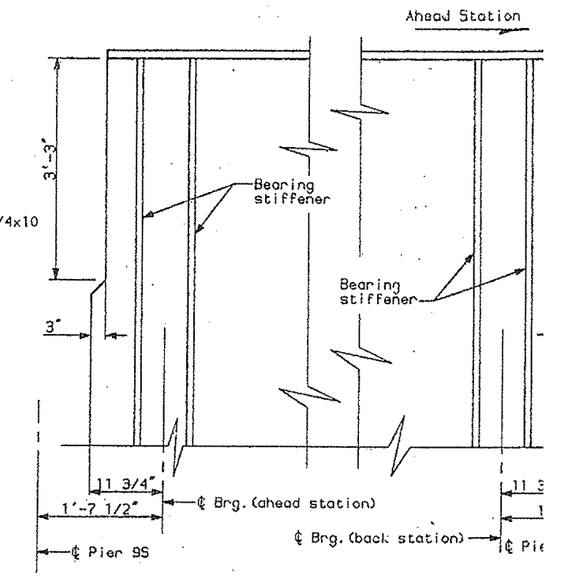

End of Girder Details

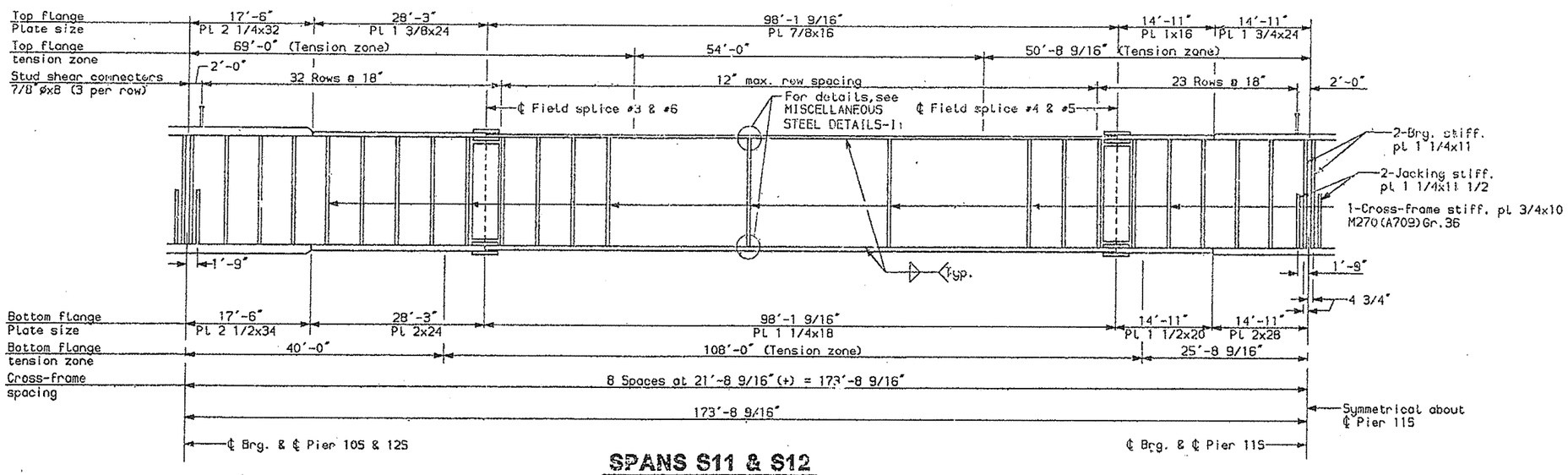

SPANS S11 & S12

NOTES:

Threaded bar supports not shown.

TABLE OF FACTORED MAXIMUM MOMENTS (ft.-kips)	Spans S10 & S13 Positive Moment	Piers 10S & 12S Negative Moment	Spans S11 & S12 Positive Moment	Pier 11S Negative Moment
DL	6256	-12882	2699	-6881
SDL	2596	-4840	1222	-3114
LL+I (Positive)	8433	2128	7118	3300
LL+I (Negative)	-2934	-11312	-4073	-9653
Total (Pos.LL+I)	17285	-15594	11039	-6695
Total (Neg.LL+I)	5918	-29034	-152	-19648

TABLE OF FACTORED MAXIMUM SHEARS (kips)	Spans S10 Left & S13 Right	Spans S10 Right & S13 Left	Spans S11 Left & S12 Right	Spans S11 Right & S12 Left
DL+SDL	269	-482	441	-348
LL+I (Positive)	254	41	340	67
LL+I (Negative)	-48	-362	-41	-358
Total (Pos.LL+I)	523	-441	781	-281
Total (Neg.LL+I)	221	-844	400	-706

TABLE OF UNFACTORED REACTIONS (kips)		Piers 9S & 13S	Piers 10S & 12S	Pier 11S
DL+SDL		207	717	539
LL	(Max.)	101	226	213
	(Min.)	-19	-34	-54
Total	(Max.)	308	943	752
	(Min.)	188	683	485

REV.	DATE	CHECKED
1	MAINE	DPI-00

DESIGN-DETAILED	DWP	ELS	6-94
CHECKED	PDB		6-94
REVISION			
FIELD CHANGES			

PLANS

s10s13_ss9

SOUTH APPROACH

STATE OF MAINE
DEPARTMENT OF TRANSPO

PORTLAND - S. PORTLA
OVER FORE RI
CUMBERLAND CO

ELEVATION GIR
SPANS S10-

35'-6 16 KT = 122

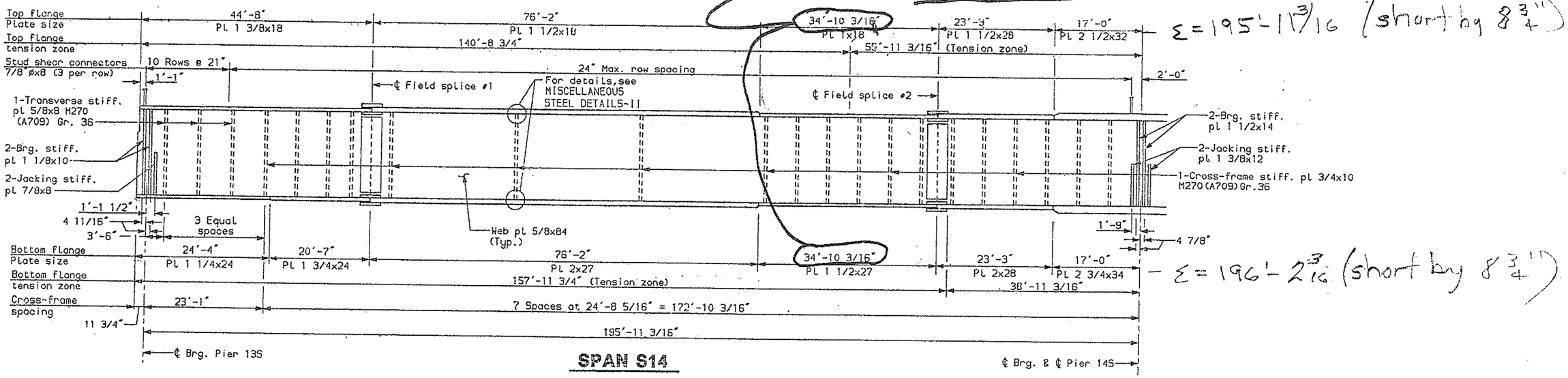

Σ = 195'-11 3/16 (short by 8 3/4")

Σ = 196'-2 3/16 (short by 8 3/4")

SPAN S14

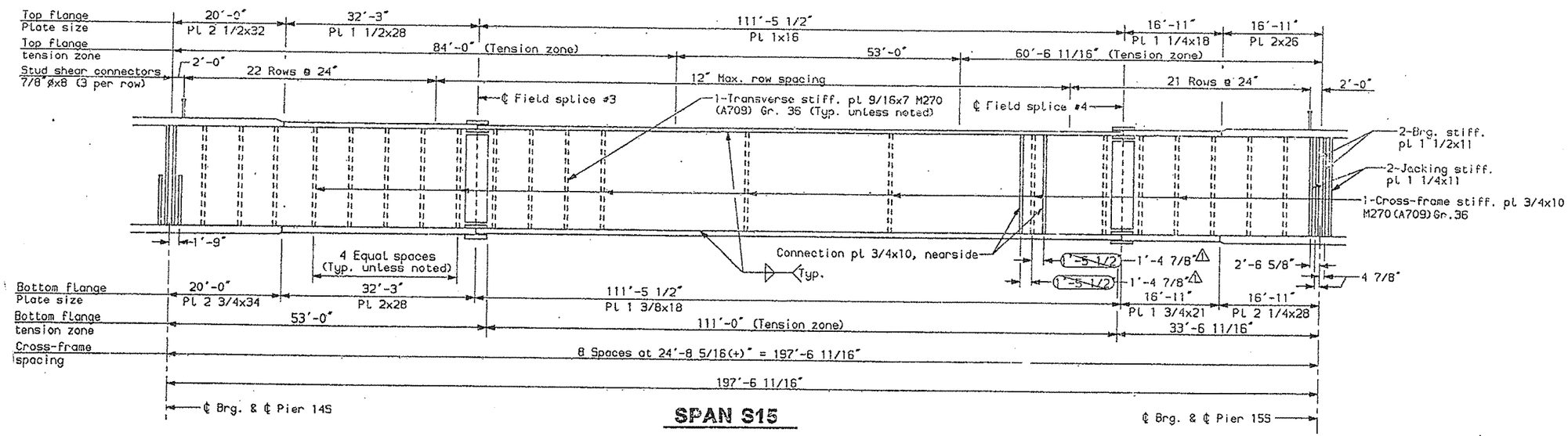

SPAN S15

NOTES:

Utility supports not shown.

⚠ Revised, 10-7-94

DESIGN-DETAILED	DMP	ELS	6-94
CHECKED	PDS		8-94
REVISION	MCI		10-94
FIELD CHANGES			

PLANS

s14s17.ss1a

SOUTH APPROACH S

STATE OF MAINE
DEPARTMENT OF TRANSPOR

PORTLAND - S. PORTLA
OVER FORE RIV
CUMBERLAND CO

ELEVATION GIR
SPANS S14-S1

SHEET 59 OF 182 AUGUSTA, MAI

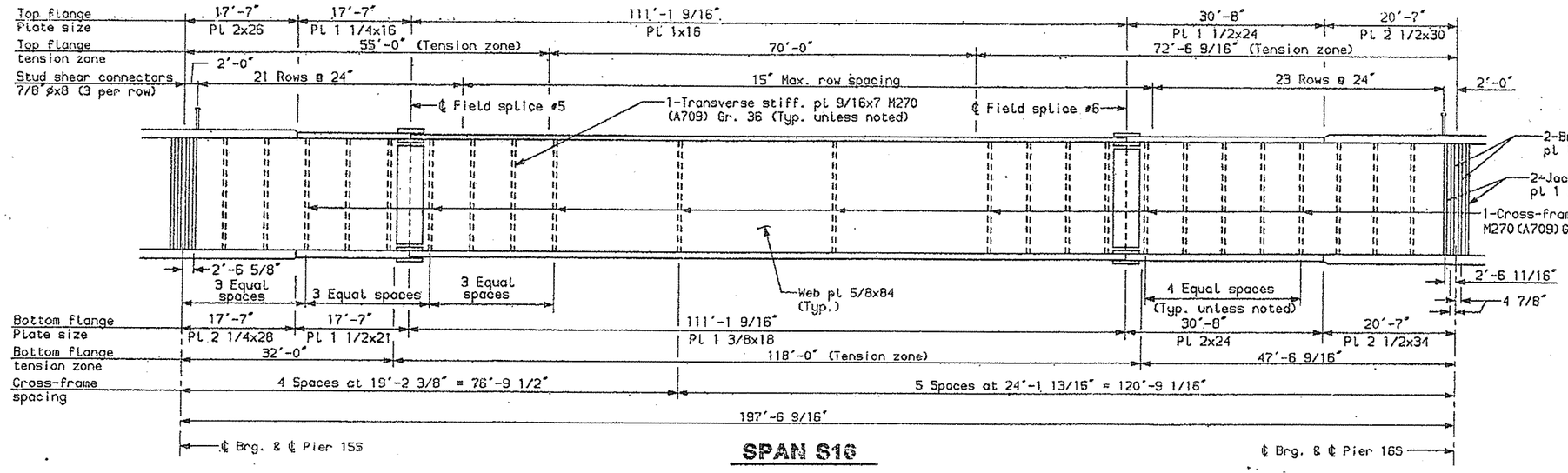

SPAN S16

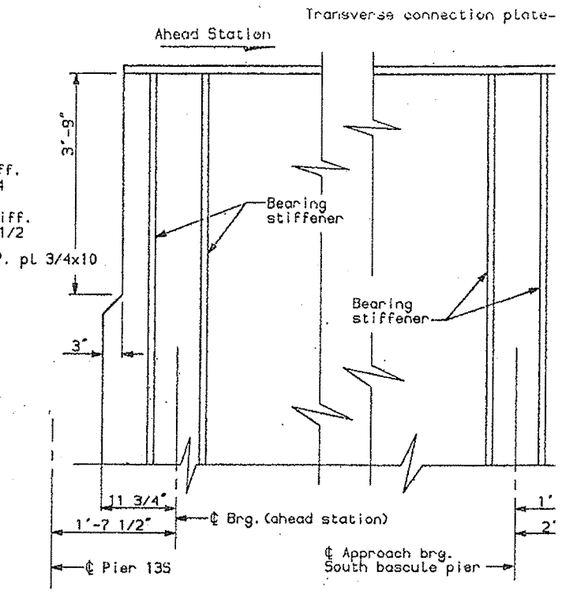

End of Girder Details

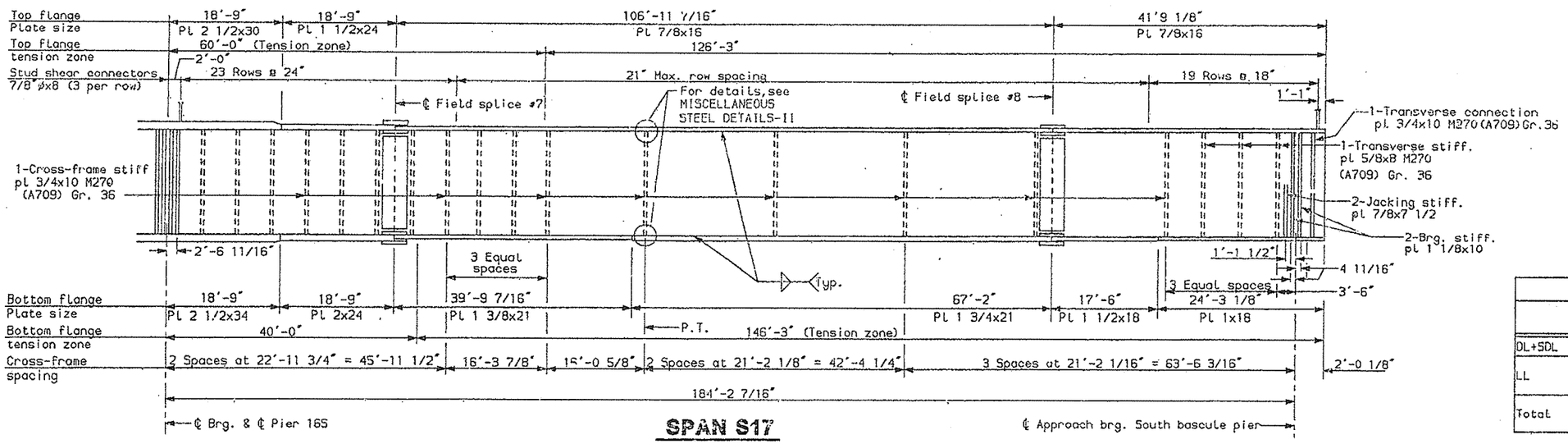

SPAN S17

NOTES:

Utility supports not shown.

TABLE OF UNFACTORED REACTIONS (kips)

		Pier 13S	Pier 14S	Pier 15S	Pier 16S	So. Bascule Pier
DL+SDL		259	706	547	665	207
LL	(Max.)	78	150	142	144	70
	(Min.)	-22	-35	-49	-36	-22
Total	(Max.)	337	856	689	809	277
	(Min.)	237	671	498	620	185

TABLE OF FACTORED MAXIMUM MOMENTS (ft.-kips)

	Span S14 Positive Moment	Pier 14S Negative Moment	Span S15 Positive Moment	Pier 15S Negative Moment	Span S16 Positive Moment	Pier 16S Negative Moment	Span S17 Positive Moment
DL	9194	-15578	2604	-8745	3271	-14564	6451
SDL	3786	-6048	1213	-4044	1526	-5483	2638
LL+I (Positive)	9163	2890	6506	4069	6574	2851	7540
LL+I (Negative)	-3831	-10619	-4299	-9473	-4114	-10027	-3657
Total (Pos.LL+I)	22143	-18736	10323	-8720	11371	-17196	16629
Total (Neg.LL+I)	9149	-32245	-482	-22262	683	-30074	5432

TABLE OF FACTORED MAXIMUM SHEARS (kips)

	Span S14 Left	Span S14 Right	Span S15 Left	Span S15 Right	Span S16 Left	Span S16 Right	Span S17 Left	Span S17 Right
DL+SDL	337	-494	419	-351	359	-412	449	-269
LL+I (Positive)	195	43	214	61	247	43	238	54
LL+I (Negative)	-54	-254	-43	-232	-61	-217	-43	-176
Total (Pos.LL+I)	532	-451	633	-290	606	-369	687	-215
Total (Neg.LL+I)	283	-748	376	-583	298	-629	406	-445

BY	DATE
DMP	6-94
BLS	6-94
PDB	

PROJECT DESIGN ENGINEER
DESIGN-DETAILED
CHECKED
REVISION
FIELD CHANGES

PLANS

s14s17.sslb

SOUTH APPROACH

STATE OF MAIN
DEPARTMENT OF TRANSP

PORTLAND - S. PORTL
OVER FORE RI
CUMBERLAND C

ELEVATION GI
SPANS S14-S

SHEET 60 OF 182 AUGUSTA, M

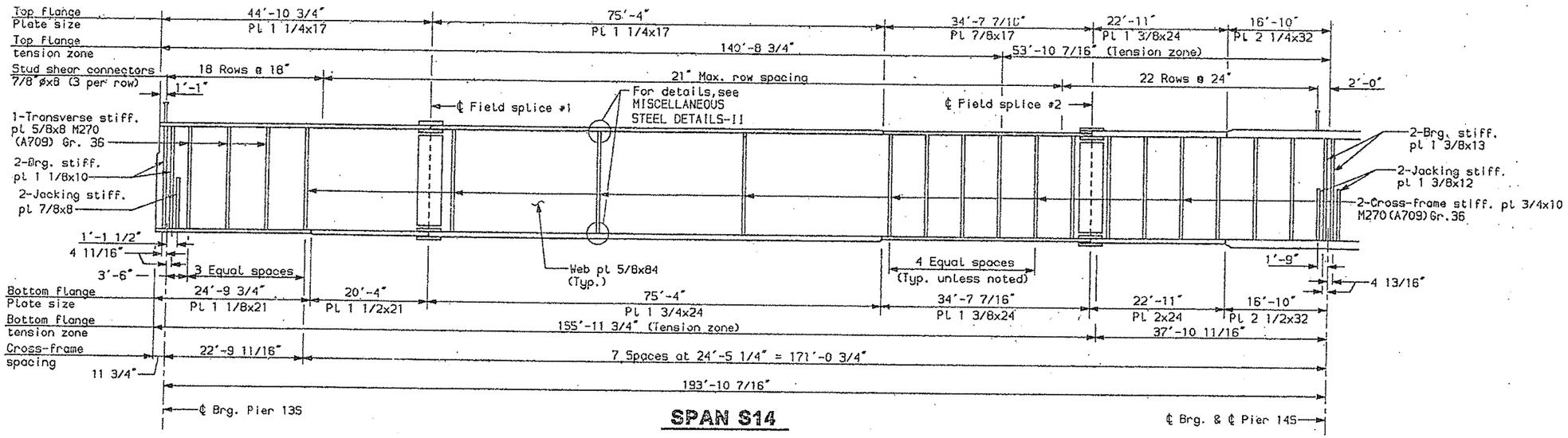

SPAN S14

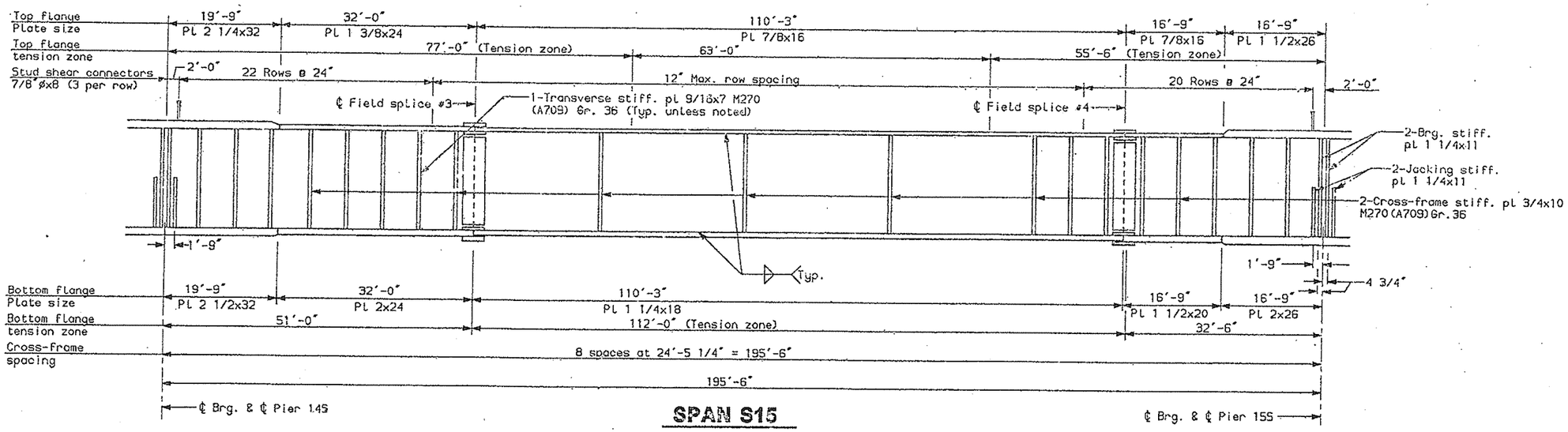

SPAN S15

NOTES:

Utility and threaded bar supports n

DESIGN-DETAILED	DNP	ELS	6-94
CHECKED		POB	6-94
REVISION			
FIELD CHANGES			

PLANS

s14s17.ss2a

SOUTH APPROACH

STATE OF MAINE
DEPARTMENT OF TRANSPO

PORTLAND - S. PORTLA
OVER FORE RIV
CUMBERLAND CO

ELEVATION GIR
SPANS S14-S1

SHEET 61 OF 102 AUGUSTA, MA

F.H.W.A. REG. NO.	STATE	PROJ.
1	MAINE	GPI-

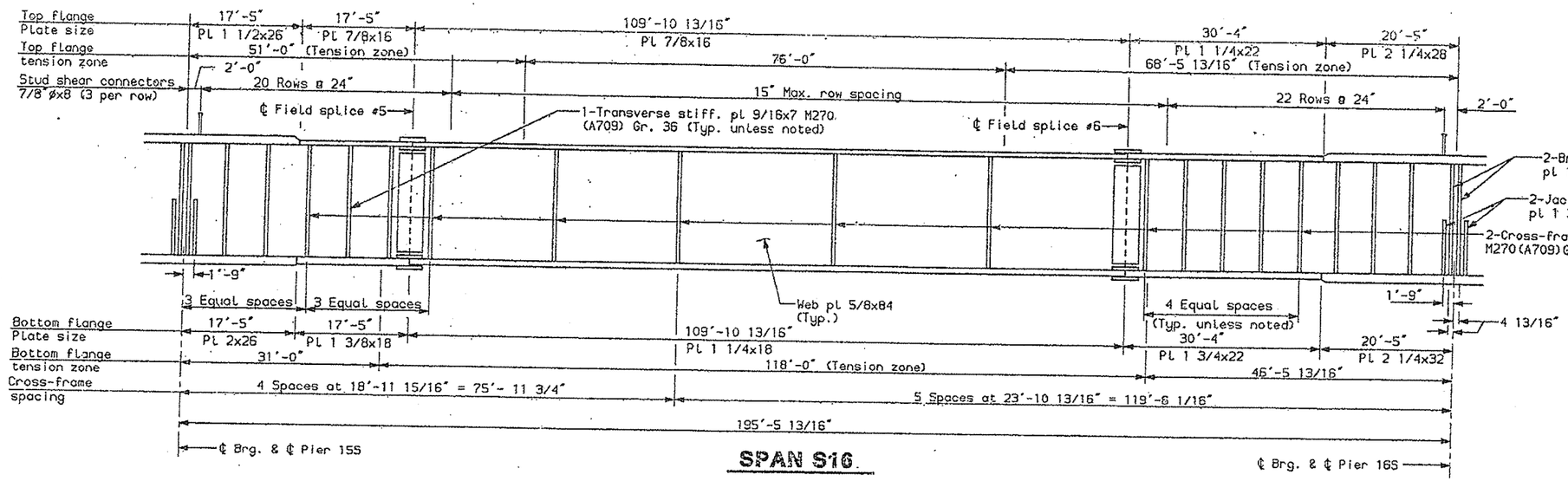

SPAN S16

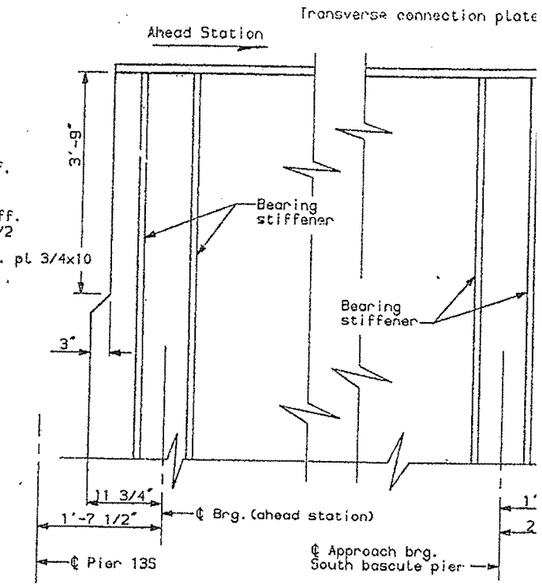

End of Girder Details

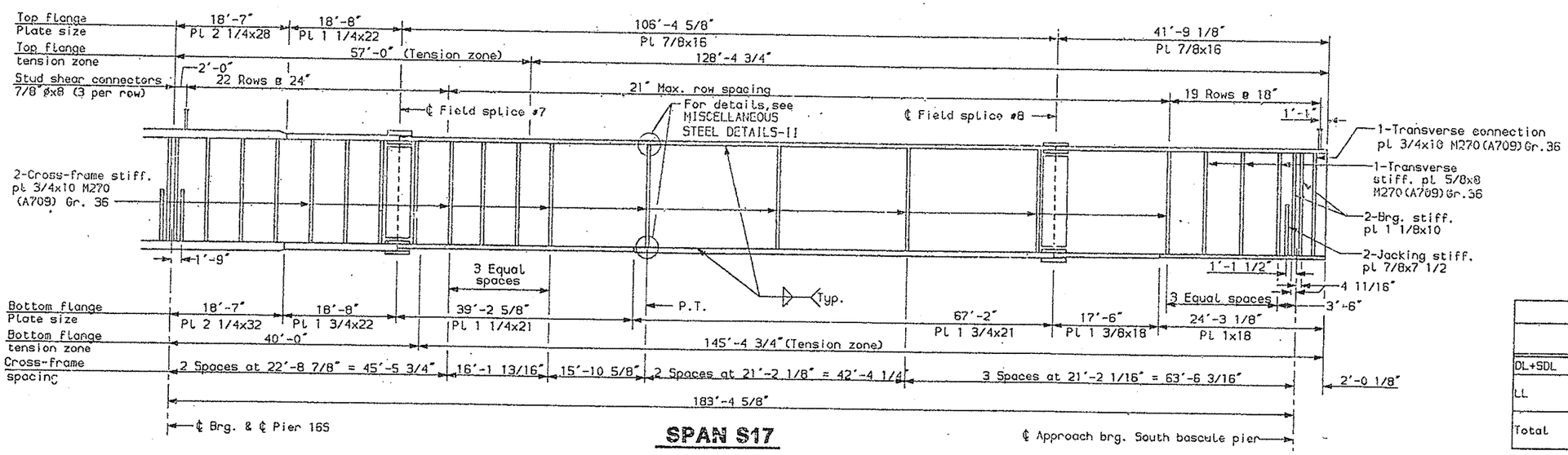

SPAN S17

NOTES:

Utility and threaded bar supports not show

TABLE OF UNFACTORED REACTIONS (kips)						
		Pier 13S	Pier 14S	Pier 15S	Pier 16S	So. Bascule Pier
DL+SDL		216	668	496	627	192
LL	(Max.)	83	181	168	175	82
	(Min.)	-9	-19	-33	-20	-11
Total	(Max.)	299	849	664	802	274
	(Min.)	207	649	463	607	181

TABLE OF FACTORED MAXIMUM MOMENTS (ft.-kips)							
	Span S14 Positive Moment	Pier 14S Negative Moment	Span S15 Positive Moment	Pier 15S Negative Moment	Span S16 Positive Moment	Pier 16S Negative Moment	Span S17 Positive Moment
DL	7705	-13965	2465	-7625	3010	-13074	6457
SDL	3067	-4889	1075	-3076	1321	-4402	2487
LL+I (Positive)	7031	1558	5291	2518	5326	1528	6636
LL+I (Negative)	-2212	-9080	-3081	-7696	-2955	-8504	-2260
Total (Pos.LL+I)	17803	-17296	8831	-8183	9657	-15948	15580
Total (Neg.LL+I)	8560	-27934	459	-18397	1376	-25980	6684

TABLE OF FACTORED MAXIMUM SHEARS (kips)								
	Span S14 Left	Span S14 Right	Span S15 Left	Span S15 Right	Span S16 Left	Span S16 Right	Span S17 Left	Span S17 Right
DL+SDL	281	-465	402	-317	326	-389	421	-250
LL+I (Positive)	208	24	266	41	280	24	282	24
LL+I (Negative)	-20	-292	-24	-280	-41	-264	-24	-206
Total (Pos.LL+I)	489	-441	668	-276	606	-365	703	-226
Total (Neg.LL+I)	261	-757	378	-597	285	-653	397	-456

DESIGN-DETAILED	DWP	ELS	6-94
CHECKED	FDB		6-94
REVISION			
FIELD CHANGES			

PLANS

s14s17.ss2b

SOUTH APPROACH

STATE OF MAINE
DEPARTMENT OF TRANSPO

PORTLAND - S. PORTLA
OVER FORE RIV
CUMBERLAND CO

ELEVATION GIR
SPANS S14-S1

SHEET 62 OF 182 AUGUSTA, MA

F.H.W.A. REG. NO.	STATE	PROJ
1	MAINE	DPI-

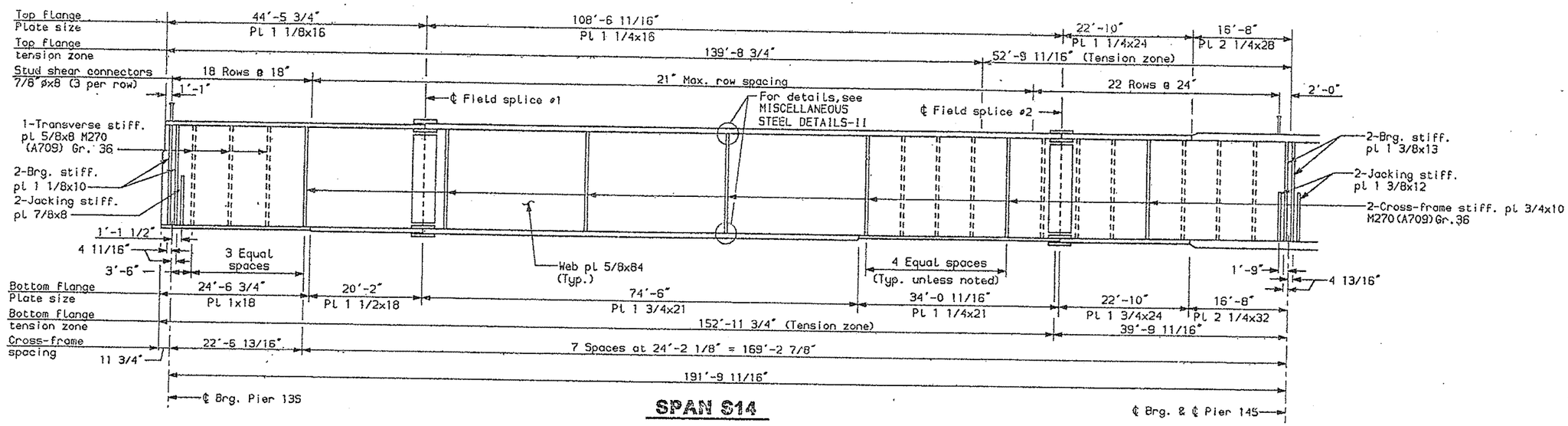

SPAN S14

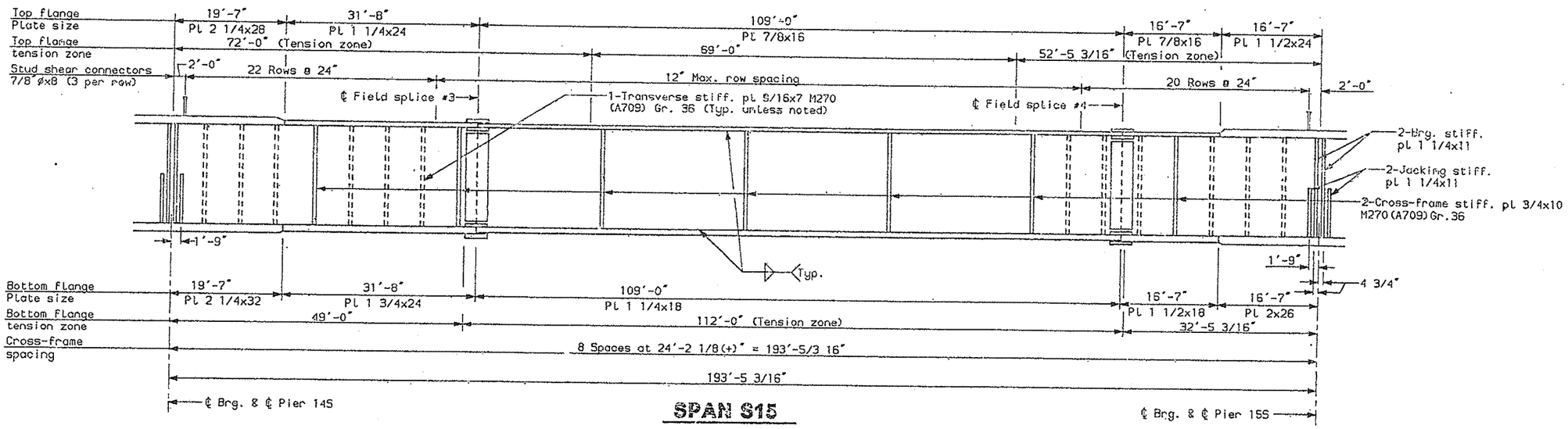

SPAN S15

NOTES:

Threaded bar supports not shown.

DESIGN-DETAILED	DWP	BY: FLS	DATE: 6-94
CHECKED		PDB	6-94
REVISION			
FIELD CHANGES			

PLANS

SOUTH APPROACH

STATE OF MAINE
DEPARTMENT OF TRANSPO

PORTLAND - S. PORTLA
OVER FORE RI
CUMBERLAND CO

ELEVATION GIR
SPANS S14-S

SHEET 63 OF 182 AUGUSTA, MA

614s17.s53a

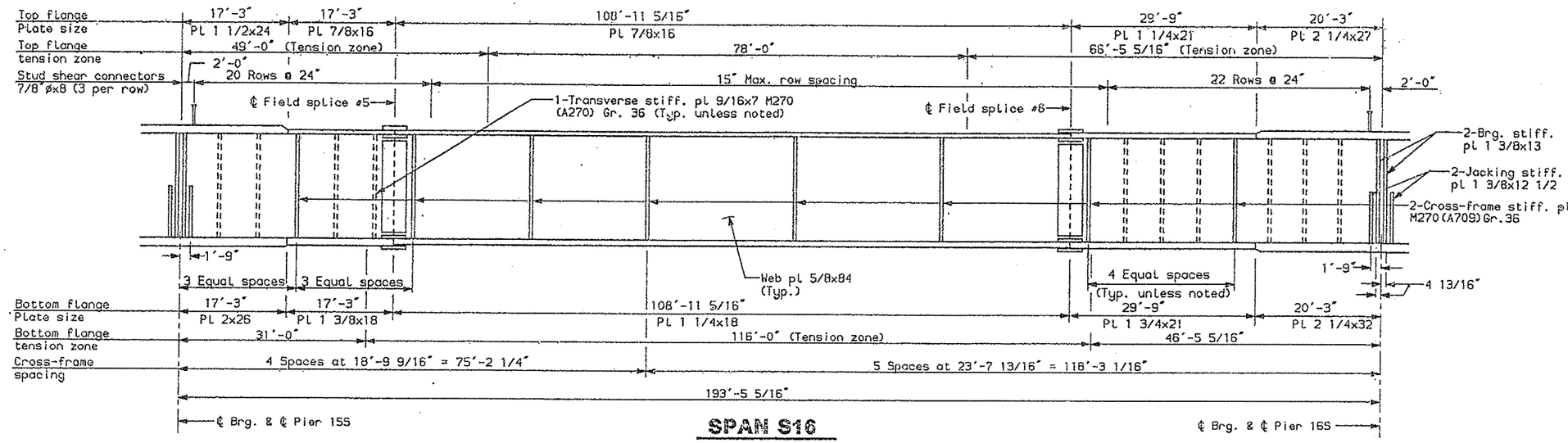

SPAN S16

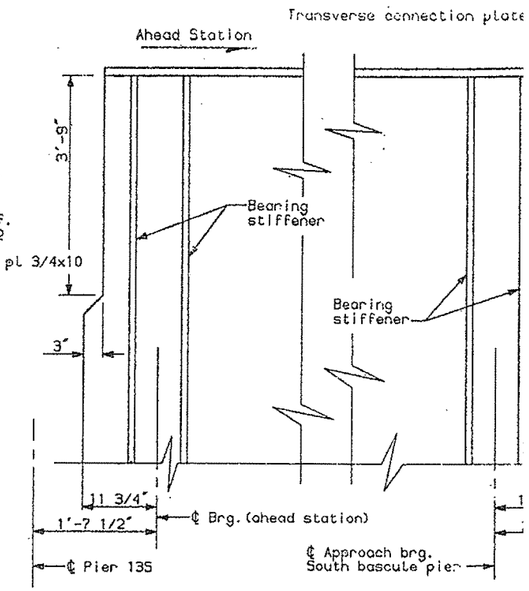

End of Girder Details

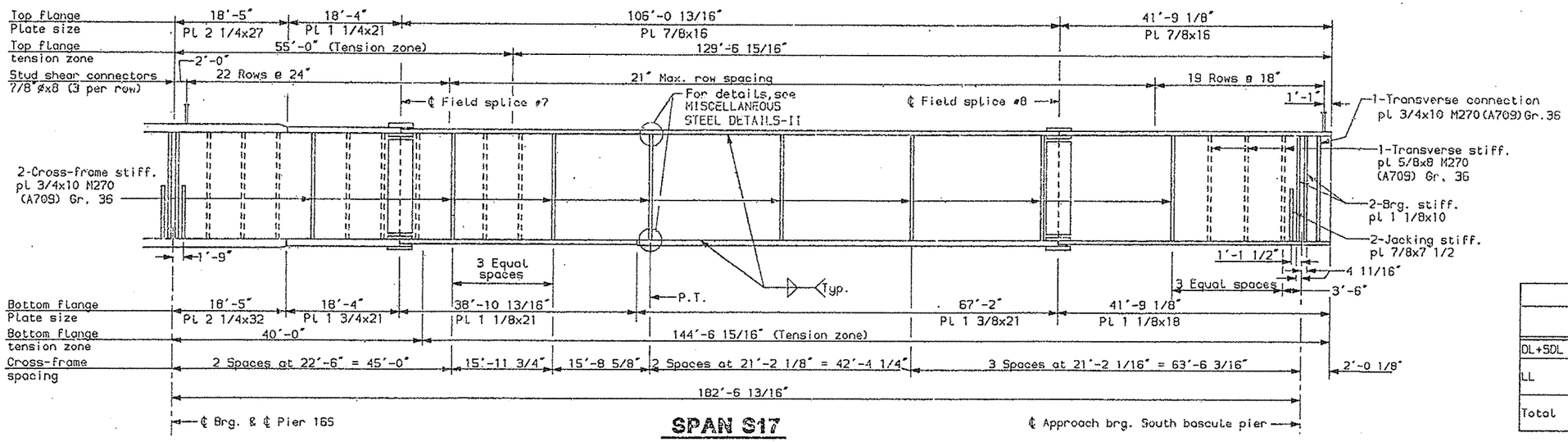

SPAN S17

NOTES:

Threaded bar supports not shown.

TABLE OF UNFACTORED REACTIONS (kips)

		Pier 13S	Pier 14S	Pier 15S	Pier 16S	So. Bascule Pier
DL+SDL		194	613	470	612	181
LL	(Max.)	81	166	157	166	82
	(Min.)	-7	-12	-24	-13	-7
Total	(Max.)	275	779	627	778	263
	(Min.)	187	601	446	599	174

TABLE OF FACTORED MAXIMUM MOMENTS (ft.-kips)

	Span S14 Positive Moment	Pier 14S Negative Moment	Span S15 Positive Moment	Pier 15S Negative Moment	Span S16 Positive Moment	Pier 16S Negative Moment	Span S17 Positive Moment
DL	7128	-12815	2458	-7333	2878	-12942	5975
SDL	2733	-4421	1040	-2859	1243	-4222	2153
LL+I (Positive)	6062	1010	4845	1998	4862	1034	5503
LL+I (Negative)	-1612	-8285	-2524	-7191	-2433	-8222	-1523
Total (Pos.LL+I)	15923	-16226	8343	-8194	8983	-16130	13631
Total (Neg.LL+I)	8249	-25521	974	-17383	1688	-25386	6605

TABLE OF FACTORED MAXIMUM SHEARS (kips)

	Span S14 Left	Span S14 Right	Span S15 Left	Span S15 Right	Span S16 Left	Span S16 Right	Span S17 Left	Span S17 Right
DL+SDL	252	-423	372	-300	309	-380	411	-235
LL+I (Positive)	202	13	247	28	266	15	271	13
LL+I (Negative)	-17	-269	-13	-260	-28	-251	-15	-206
Total (Pos.LL+I)	454	-410	619	-272	575	-365	682	-222
Total (Neg.LL+I)	235	-692	359	-560	281	-631	396	-441

REG. NO.	STATE	FINA
1	MAINE	DPI

PROJECT DESIGN ENGINEER	BY	DATE
DESIGN-DETAILED	DWP	5-94
CHECKED	ELS	5-94
REVISION	PDB	
FIELD CHANGES		

PLANS

814s17.ss3b

SOUTH APPROAC

STATE OF MAI
DEPARTMENT OF TRANS

PORTLAND - S. PORT
OVER FORE R
CUMBERLAND C

ELEVATION GI
SPANS S14-S

F.H.W.A. REG. NO.	STATE	PROJECT #
1	MAINE	DPI-0068

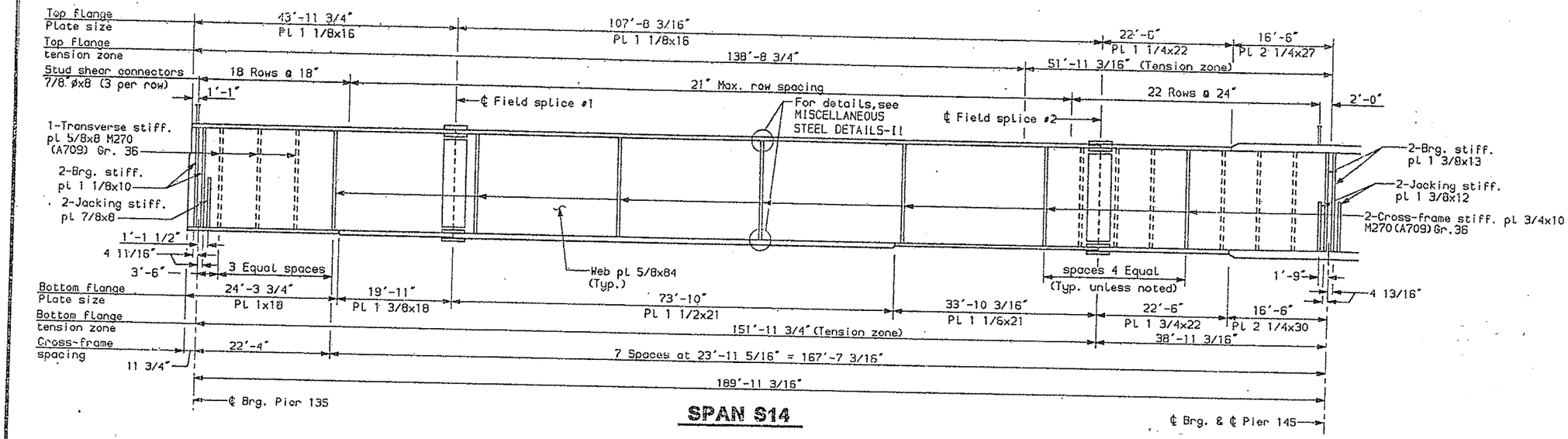

SPAN S14

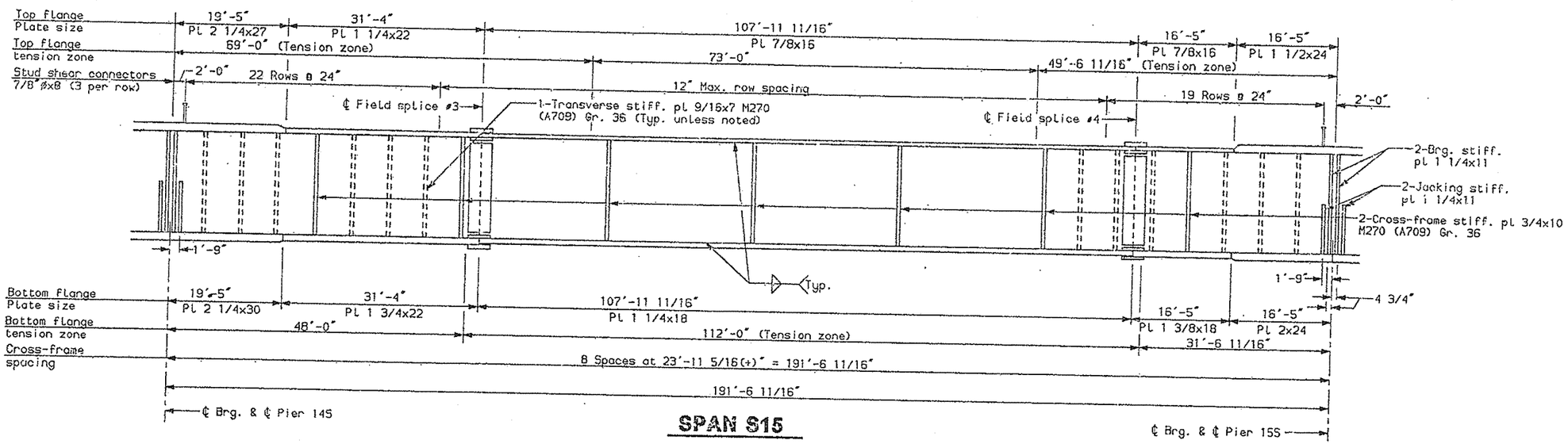

SPAN S15

NOTES:

Threaded bar supports not shown.

CHECKED	REVISION	FIELD CHANGES
PDB	6-94	

PLANS

s14s17.es4a

SOUTH APPROACH SP

STATE OF MAINE
DEPARTMENT OF TRANSPORTA

PORTLAND - S. PORTLAND
OVER FORE RIVER
CUMBERLAND COUN

ELEVATION GIRDE
SPANS S14-S17

SHEET 65 OF 182 AUGUSTA, MAINE

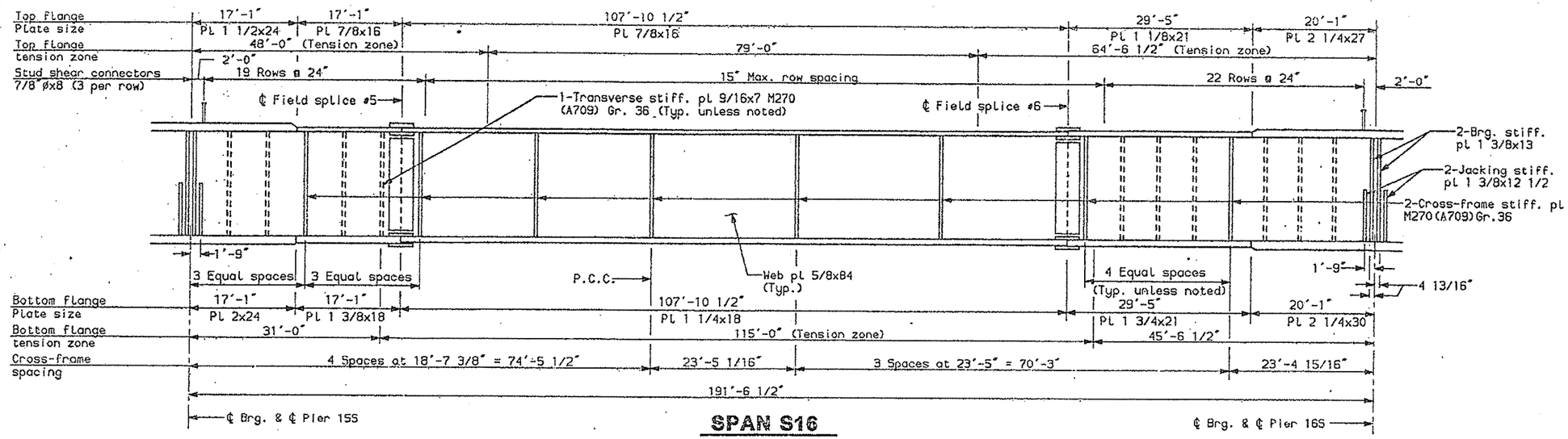

SPAN S16

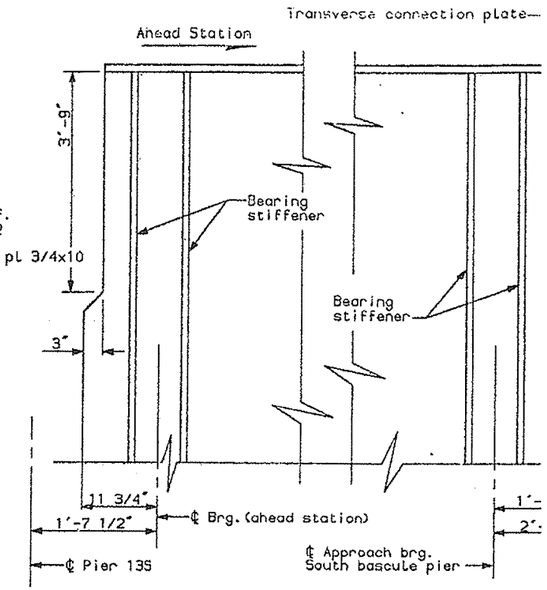

End of Girder Details

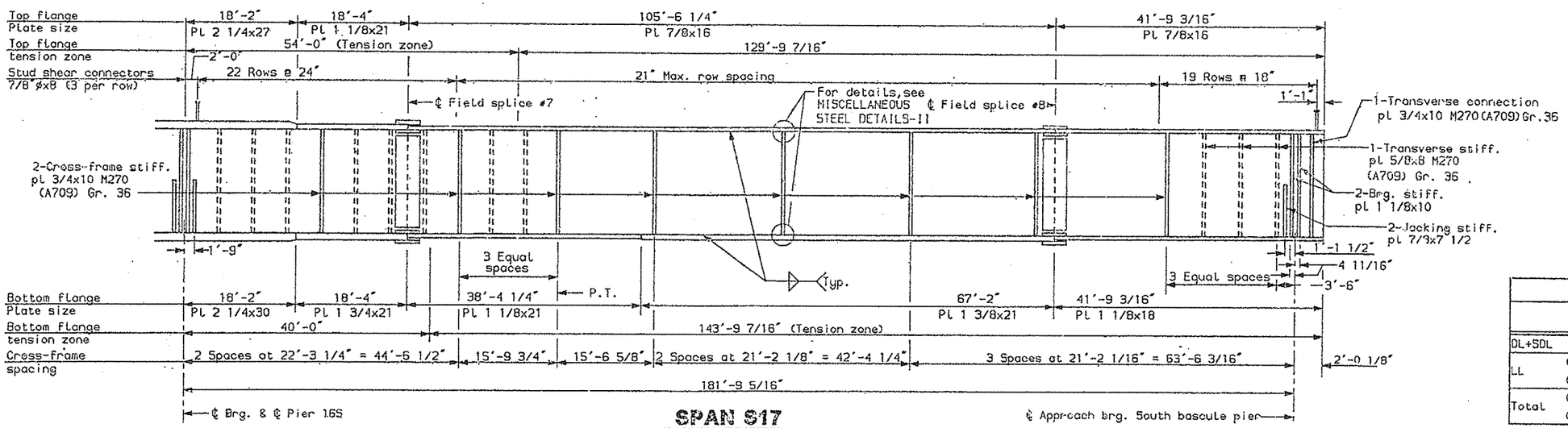

SPAN S17

NOTES:

Threaded bar supports not shown.

TABLE OF UNFACTORED REACTIONS (kips)						
		Pier 13S	Pier 14S	Pier 15S	Pier 16S	So.Bascule Pier
DL+SDL		201	642	506	627	192
LL	(Max.)	76	159	154	153	80
	(Min.)	-4	-10	-20	-10	-5
Total	(Max.)	277	801	660	780	272
	(Min.)	197	632	486	617	187

TABLE OF FACTORED MAXIMUM MOMENTS (ft.-kips)							
	Span S14 Positive Moment	Pier 14S Negative Moment	Span S15 Positive Moment	Pier 15S Negative Moment	Span S16 Positive Moment	Pier 16S Negative Moment	Span S17 Positive Moment
DL	6512	-12217	2462	-7137	2759	-12251	5968
SDL	2479	-4611	1018	-3095	1188	-4377	2194
LL+I (Positive)	5222	847	4420	1725	4429	867	5152
LL+I (Negative)	-1276	-7560	-2160	-6617	-2100	-7453	-1302
Total (Pos.LL+I)	14243	-15961	7900	-8507	8376	-15761	13314
Total (Neg.LL+I)	7745	-24388	1320	-16849	1847	-24081	6860

TABLE OF FACTORED MAXIMUM SHEARS (kips)								
	Span S14 Left	Span S14 Right	Span S15 Left	Span S15 Right	Span S16 Left	Span S16 Right	Span S17 Left	Span S17 Right
DL+SDL	261	-438	393	-328	330	-389	421	-250
LL+I (Positive)	191	11	225	24	247	11	256	11
LL+I (Negative)	-9	-247	-11	-245	-24	-230	-11	-202
Total (Pos.LL+I)	452	-427	618	-304	577	-378	677	-239
Total (Neg.LL+I)	252	-685	382	-573	306	-619	410	-452

DESIGN-DETAILED	DWP	ELC	6-94
CHECKED	PDB		6-94
REVISION			
FIELD CHANGES			

PLANS

a14s17.ss4b

SOUTH APPROACH

STATE OF MAINE
DEPARTMENT OF TRANSPO

PORTLAND - S. PORTLA
OVER FORE RIV
CUMBERLAND CO

ELEVATION GIR
SPANS S14-S1

SHEET 66 OF 182 AUGUSTA, MA

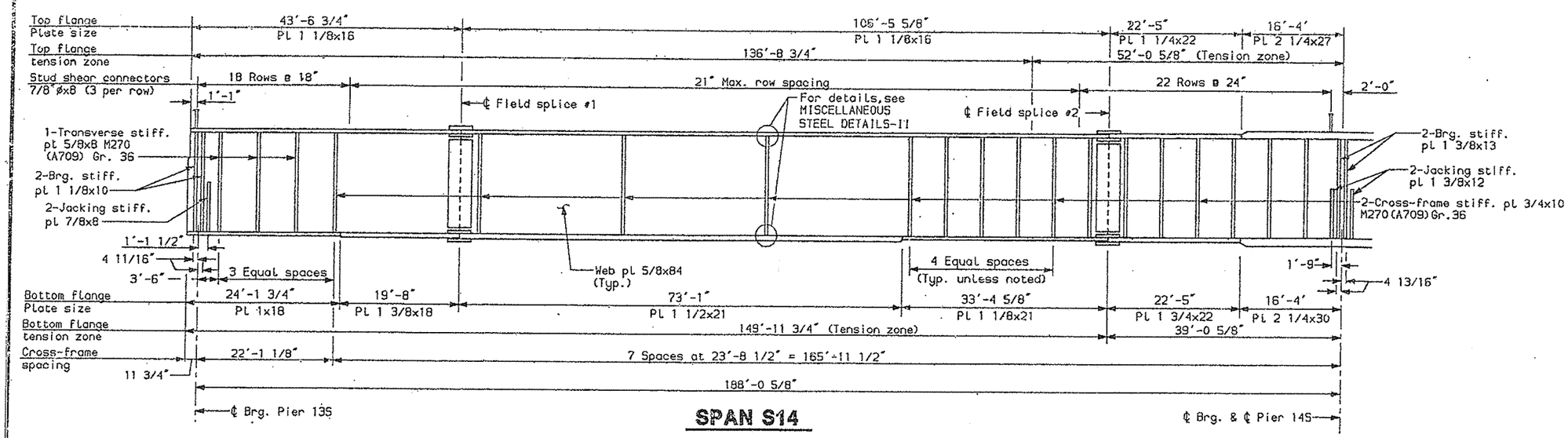

SPAN S14

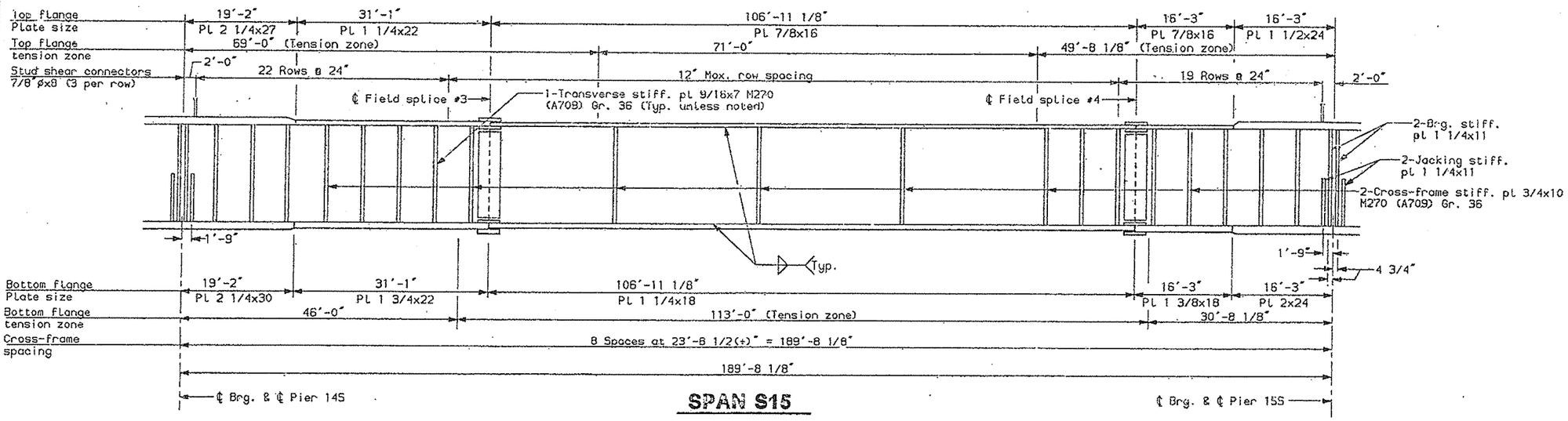

SPAN S15

NOTES:

Threaded bar supports not shown.

PLANS

DESIGN-DETAILED | DMP | ELS | 6-94
CHECKED | PDB | 6-94
REVISION
FIELD CHANGES

s14s17.ss5a

SOUTH APPROACH

STATE OF MAINE
DEPARTMENT OF TRANSPO

PORTLAND - S. PORTLA
OVER FORE RI
CUMBERLAND CO

ELEVATION GIR
SPANS S14-S1

SHEET 67 OF 182 AUGUSTA, MA

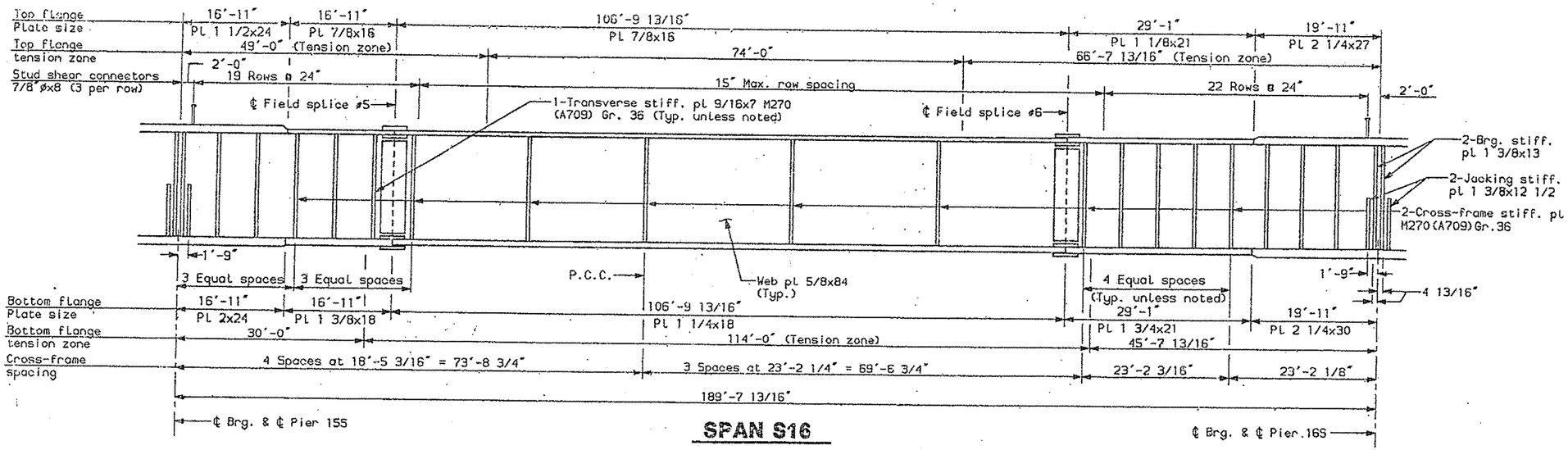

SPAN S16

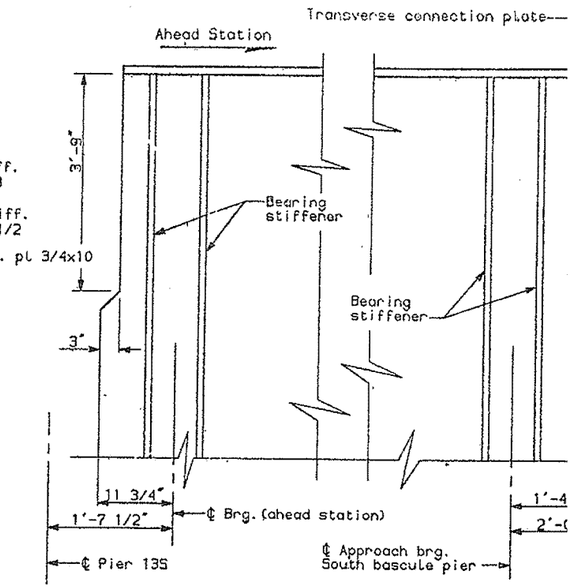

End of Girder Details

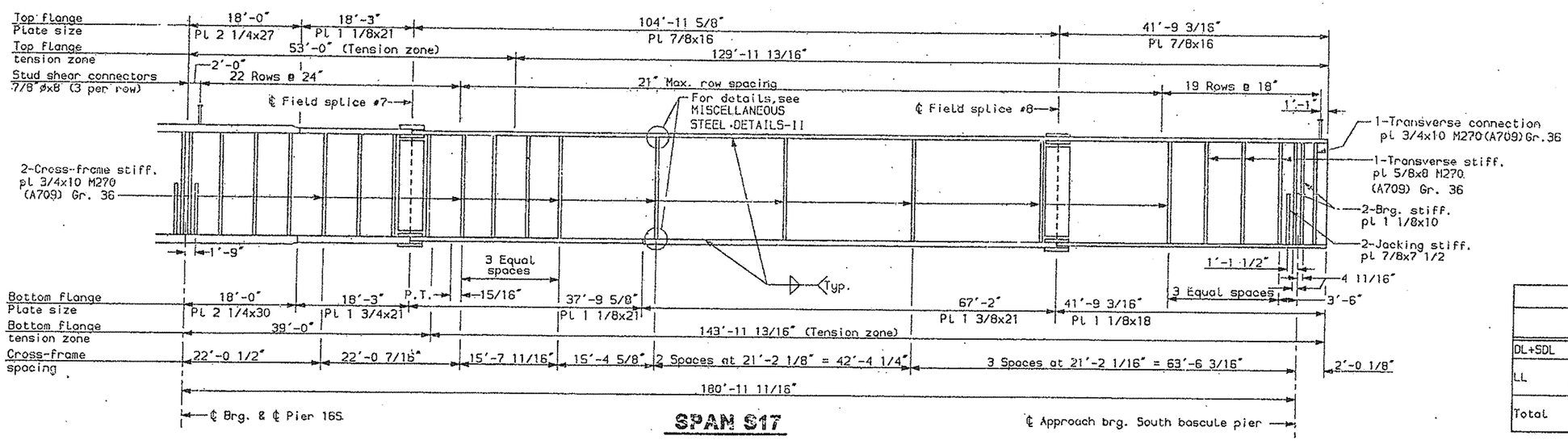

SPAN S17

NOTES:

threaded bar supports not shown.

TABLE OF UNFACTORED REACTIONS (kips)

		Pier 13S	Pier 14S	Pier 15S	Pier 16S	So. Bascule Pier
DL+SDL		189	607	472	601	184
LL	(Max.)	79	165	155	162	82
	(Min.)	-5	-10	-23	-10	-6
Total	(Max.)	268	772	627	763	266
	(Min.)	184	597	449	591	178

TABLE OF FACTORED MAXIMUM MOMENTS (Ft.-kips)

	Span S14 Positive Moment	Pier 14S Negative Moment	Span S15 Positive Moment	Pier 15S Negative Moment	Span S16 Positive Moment	Pier 16S Negative Moment	Span S17 Positive Moment
DL	6287	-11861	2449	-6843	2626	-12129	5905
SDL	2458	-4352	1034	-2877	1149	-4200	2191
LL+I (Positive)	5811	886	4814	1866	4821	884	5698
LL+I (Negative)	-1415	-8075	-2375	-7026	-2386	-8092	-1372
Total (Pos.LL+I)	14556	-15327	8297	-7854	8596	-15445	13794
Total (Neg.LL+I)	7330	-24288	1108	-16746	1389	-24421	6724

TABLE OF FACTORED MAXIMUM SHEARS (kips)

	Span S14 Left	Span S14 Right	Span S15 Left	Span S15 Right	Span S16 Left	Span S16 Right	Span S17 Left	Span S17 Right
DL+SDL	246	-413	371	-306	308	-369	410	-239
LL+I (Positive)	197	11	240	28	258	11	266	13
LL+I (Negative)	-11	-262	-11	-256	-28	-240	-11	-204
Total (Pos.LL+I)	443	-402	611	-278	566	-358	676	-226
Total (Neg.LL+I)	235	-675	360	-562	280	-609	399	-443

PLANS

REVISION	CHECKED	DWN	DSN	DATE
FIELD CHANGES	POB			8-94

SOUTH APPROACH S

STATE OF MAINE
DEPARTMENT OF TRANSPOR

PORTLAND - S. PORTLAN
OVER FORE RIVE
CUMBERLAND COU

ELEVATION GIRD
SPANS S14-S17

SHEET 58 OF 182 AUGUSTA, MAIN

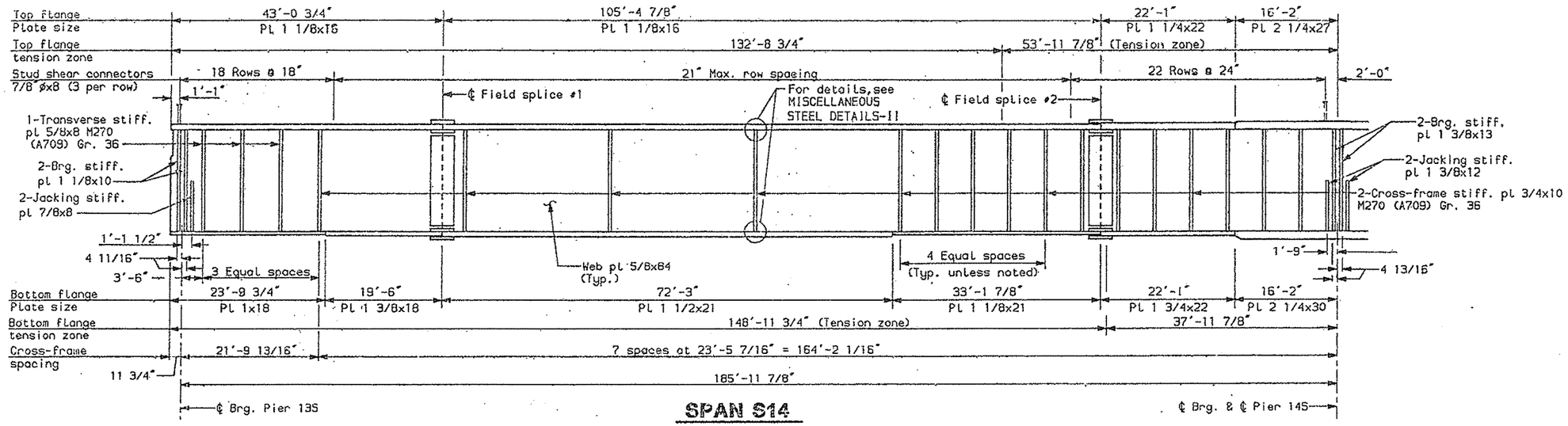

SPAN S14

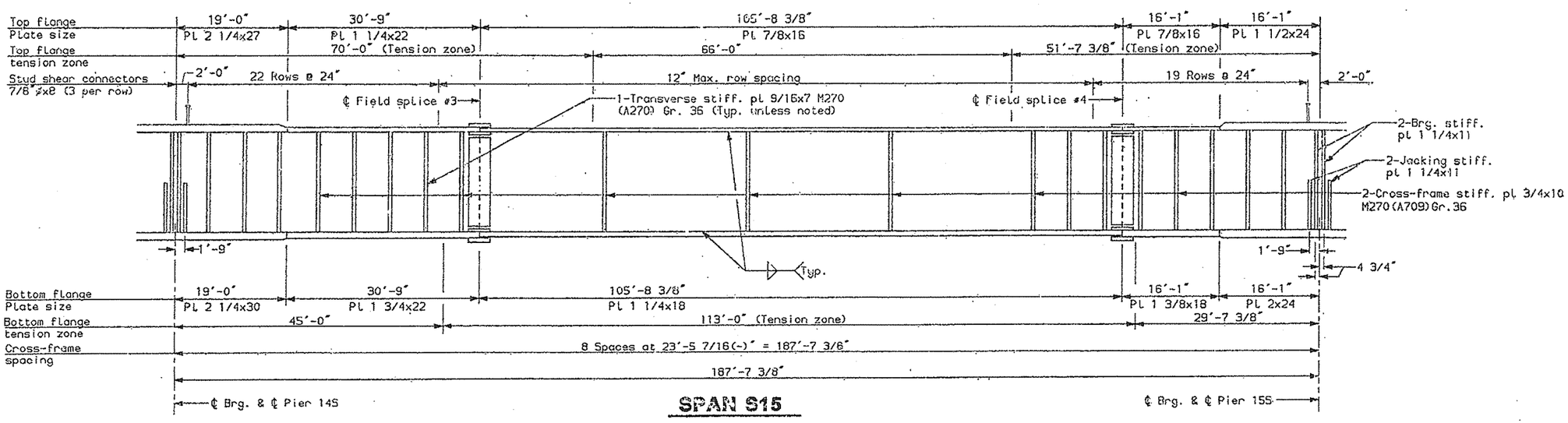

SPAN S15

NOTES:

Threaded bar supports not shown.

1	MAINE	DPI-9060	

DESIGN-DETAILED	DWP	ELS	6-94
CHECKED	PDB		E-94
REVISION			
FIELD CHANGES			

PLANS

s14s17.ss6a

SOUTH APPROACH

STATE OF MAINE
DEPARTMENT OF TRANSPOR

PORTLAND - S. PORTLA

OVER FORE RIV

CUMBERLAND CO

ELEVATION GIR

SPANS S14-S1

SHEET 69 OF 182 AUGUSTA, MAI

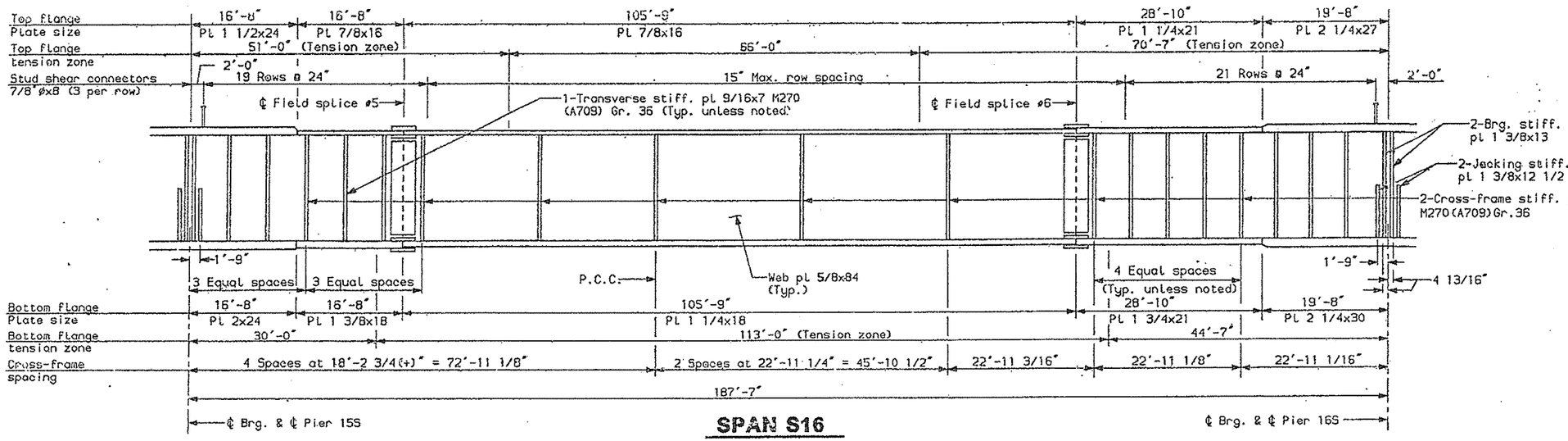

SPAN S16

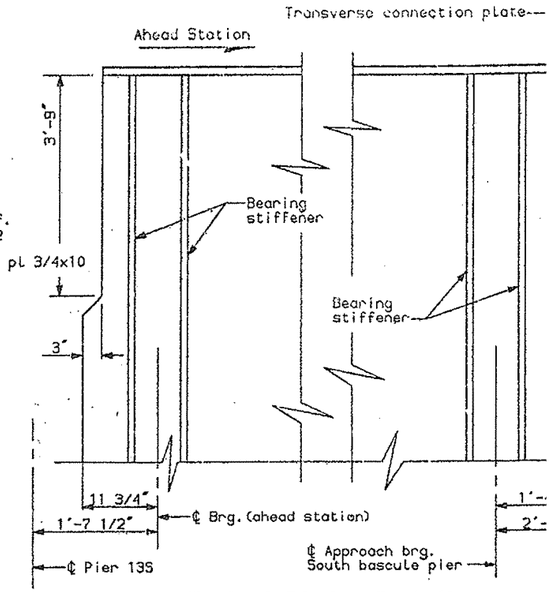

End of Girder Details

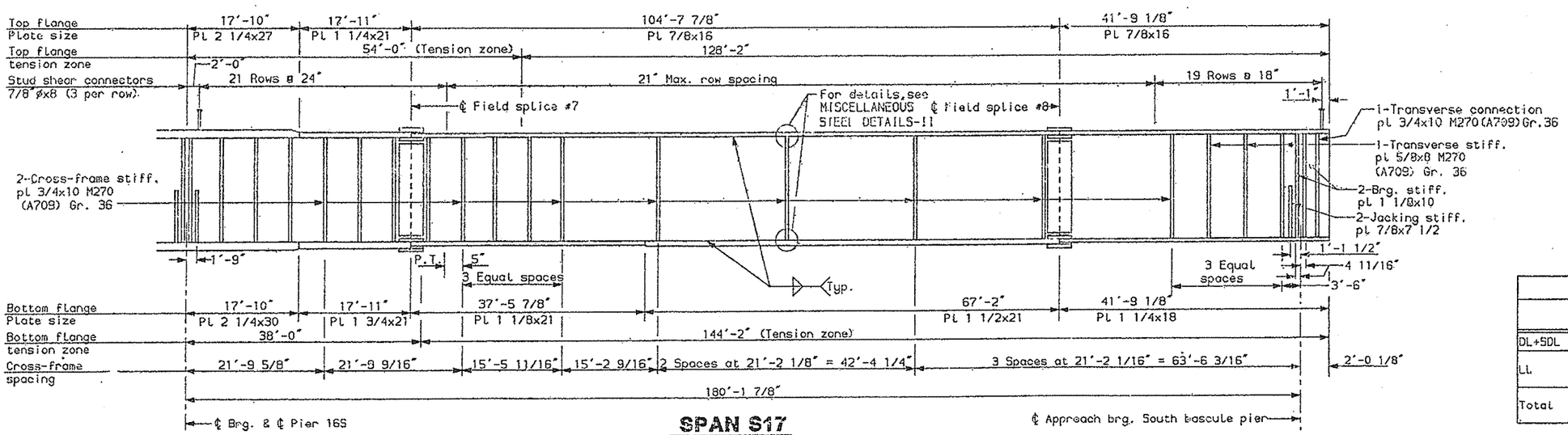

SPAN S17

NOTES:

Threaded bar supports not shown.

TABLE OF UNFACTORED REACTIONS (kips)						
		Pier 13S	Pier 14S	Pier 15S	Pier 16S	So.Bascule Pier
DL+SDL		177	564	436	566	179
LL	(Max.)	82	179	171	179	83
	(Min.)	-8	-14	-30	-14	-8
Total	(Max.)	259	743	607	745	262
	(Min.)	169	550	406	552	171

TABLE OF FACTORED MAXIMUM MOMENTS (ft.-kips)							
	Span S14 Positive Moment	Pier 14S Negative Moment	Span S15 Positive Moment	Pier 15S Negative Moment	Span S16 Positive Moment	Pier 16S Negative Moment	Span S17 Positive Moment
DL	5922	-11379	2439	-6556	2464	-11755	5962
SDL	2430	-4047	1080	-2643	1130	-3994	2301
LL+I (Positive)	6548	1131	5469	2292	5462	1124	6710
LL+I (Negative)	-1781	-8901	-2860	-7761	-2925	-8976	-1755
Total (Pos.LL+I)	14900	-14235	8988	-6907	9056	-14625	14973
Total (Neg.LL+I)	6571	-24327	659	-16960	699	-24725	6508

TABLE OF FACTORED MAXIMUM SHEARS (kips)								
	Span S14 Left	Span S14 Right	Span S15 Left	Span S15 Right	Span S16 Left	Span S16 Right	Span S17 Left	Span S17 Right
DL+SDL	230	-386	346	-282	286	-347	384	-233
LL+I (Positive)	206	17	264	37	286	17	290	20
LL+I (Negative)	-17	-288	-17	-286	-37	-264	-17	-208
Total (Pos.LL+I)	436	-369	510	-245	572	-330	674	-213
Total (Neg.LL+I)	213	-674	329	-568	249	-611	367	-441

SOUTH APPROACH

STATE OF MAINE
DEPARTMENT OF TRANSPO

PORTLAND - S. PORTLA
OVER FORE RI
CUMBERLAND CO

ELEVATION GIR
SPANS S14-S1

SHEET 70 OF 182 AUGUSTA, MA

PLANS

DESIGN-DETAILED | DWP | E-94
CHECKED | PDB | E-94
REVISION | ELS
FIELD CHANGES

s14s17.ss6b

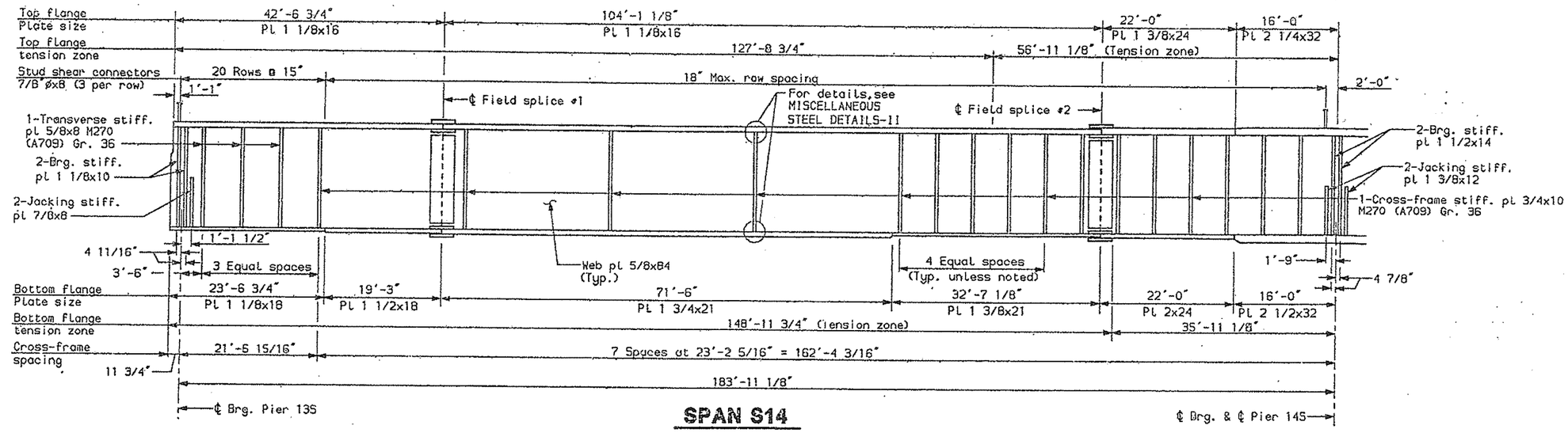

SPAN S14

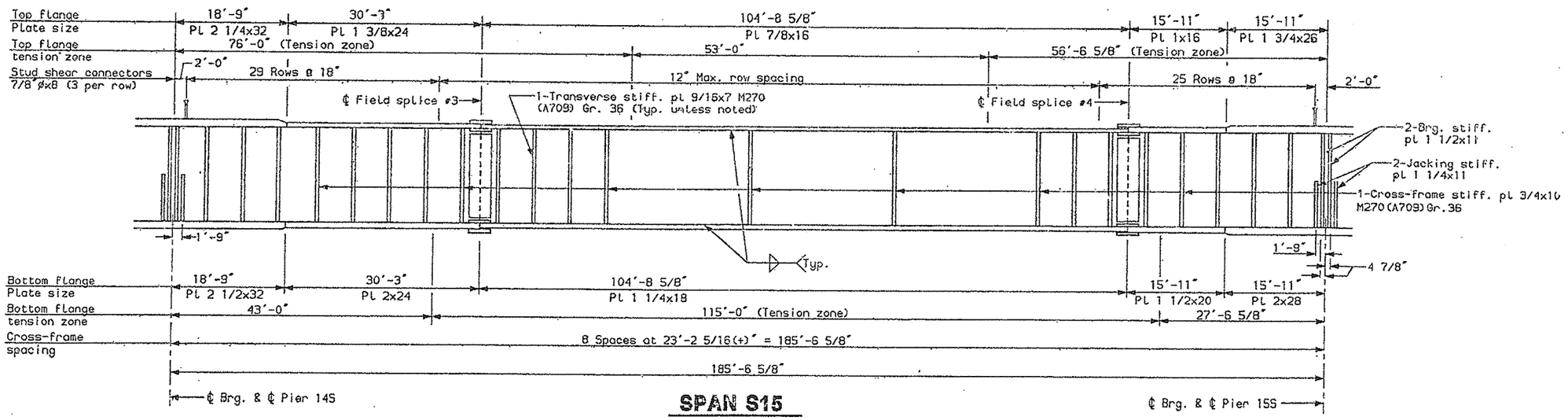

SPAN S15

NOTES:

Threaded bar supports not shown.

DESIGN-DETAILED	DWP	ELS	6-94
CHECKED	PDB		6-94
REVISION			
FIELD CHANGES			

PLANS

s14s17.ss7a

SOUTH APPROACH

STATE OF MAINE
DEPARTMENT OF TRANSPO

PORTLAND - S. PORTLA
OVER FORE RI
CUMBERLAND CO

ELEVATION GIR
SPANS S14-S1

SHEET 71 OF 182 AUGUSTA, MA

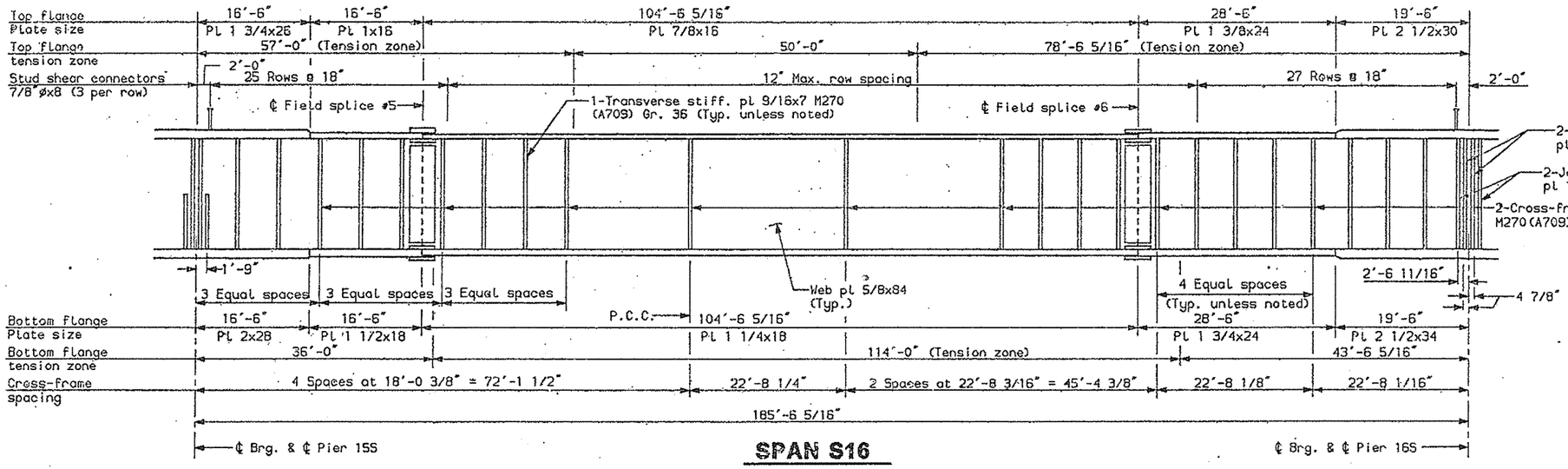

SPAN S16

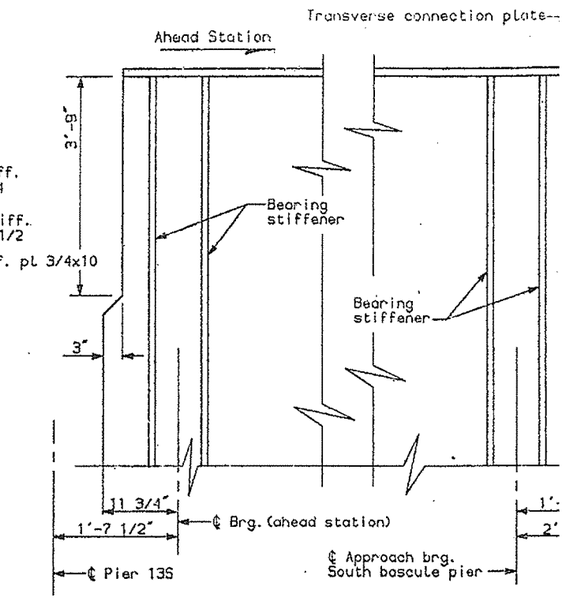

End of Girder Details

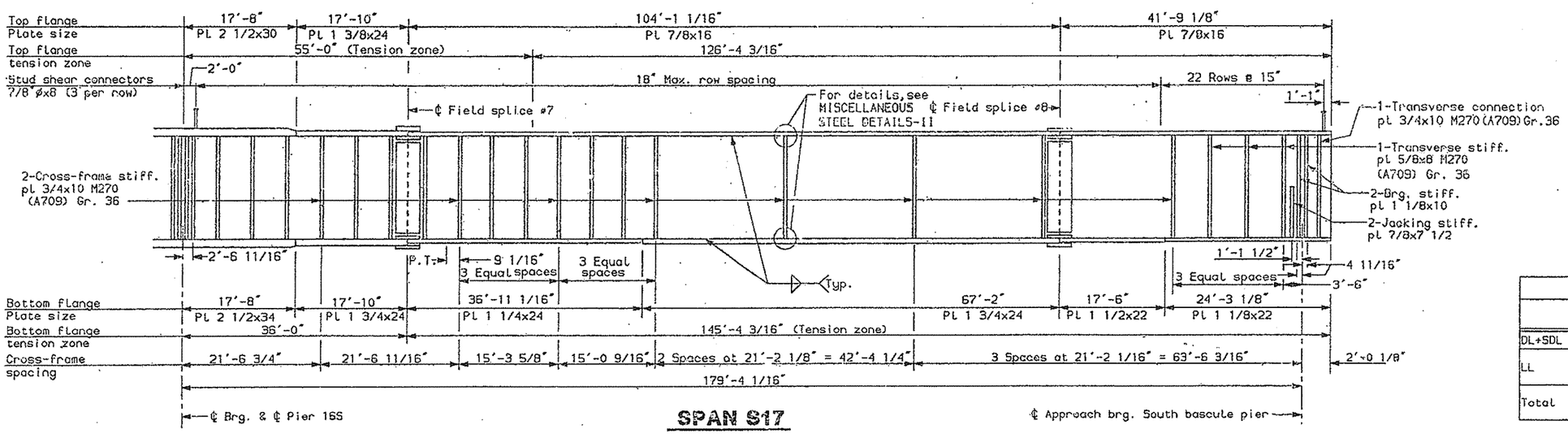

SPAN S17

NOTES:

Threaded bar supports not shown

TABLE OF UNFACTORED REACTIONS (kips)						
		Pier 13S	Pier 14S	Pier 15S	Pier 16S	So.Bascule Pier
DL+SDL		190	675	512	696	204
LL	(Max.)	97	222	208	226	103
	(Min.)	-19	-35	-54	-34	-18
Total	(Max.)	287	897	720	922	307
	(Min.)	171	640	458	662	186

TABLE OF FACTORED MAXIMUM MOMENTS (ft.-kips)							
	Span S14 Positive Moment	Pier 14S Negative Moment	Span S15 Positive Moment	Pier 15S Negative Moment	Span S16 Positive Moment	Pier 16S Negative Moment	Span S17 Positive Moment
DL	5819	-11972	2443	-6783	2284	-12813	6248
SDL	2673	-5069	1123	-3357	1121	-5073	2727
LL+I (Positive)	8697	2299	6910	3594	6884	2262	8866
LL+I (Negative)	-3150	-11748	-4006	-10168	-4097	-11815	-2962
Total (Pos.LL+I)	17189	-14742	10476	-6546	10289	-15624	17843
Total (Neg.LL+I)	5342	-28789	-440	-20308	-692	-29701	6013

TABLE OF FACTORED MAXIMUM SHEARS (kips)								
	Span S14 Left	Span S14 Right	Span S15 Left	Span S15 Right	Span S16 Left	Span S16 Right	Span S17 Left	Span S17 Right
DL+SDL	247	-454	420	-333	330	-425	469	-265
LL+I (Positive)	243	43	323	67	342	41	353	43
LL+I (Negative)	-48	-344	-43	-338	-67	-325	-41	-258
Total (Pos.LL+I)	490	-411	743	-266	672	-384	822	-222
Total (Neg.LL+I)	199	-798	377	-671	263	-750	428	-523

PLANS

DESIGN-DETAILED DWP 6-94
CHECKED ELS 6-94
REVISION PMB
FIELD CHANGES

s14s17.ss7b

SOUTH APPROACH

STATE OF MAIN
DEPARTMENT OF TRANSP

PORTLAND - S. PORTL
OVER FORE RI
CUMBERLAND C

ELEVATION GI
SPANS S14-S

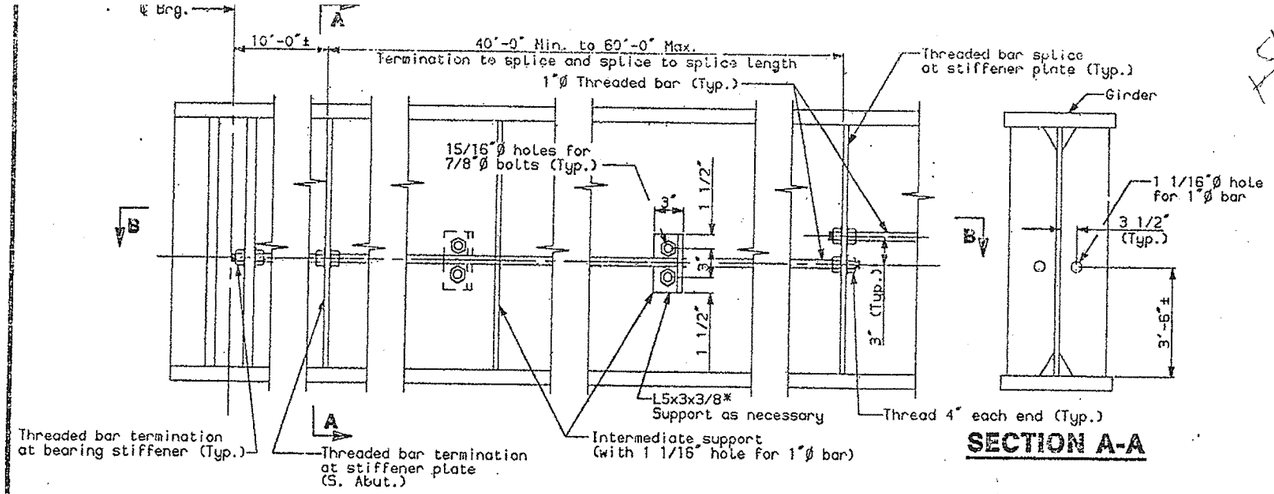

GIRDER ELEVATION
(Interior girder shown)

SECTION A-A

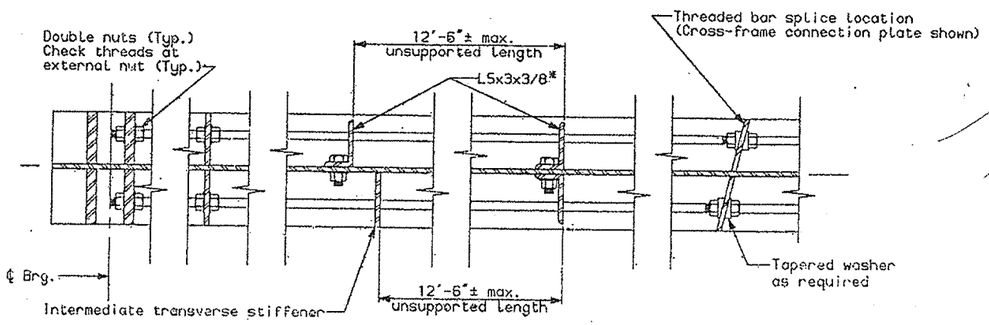

SECTION B-B

STRUCTURAL STEEL THREADED BAR DETAIL

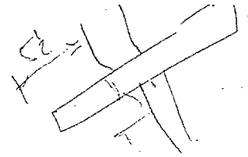

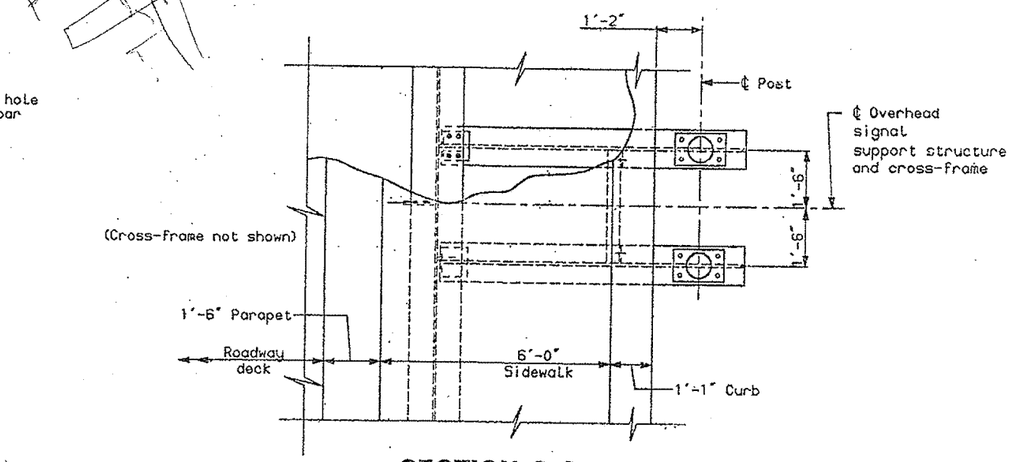

SECTION C-C

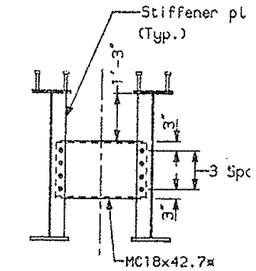

SECTION E-E

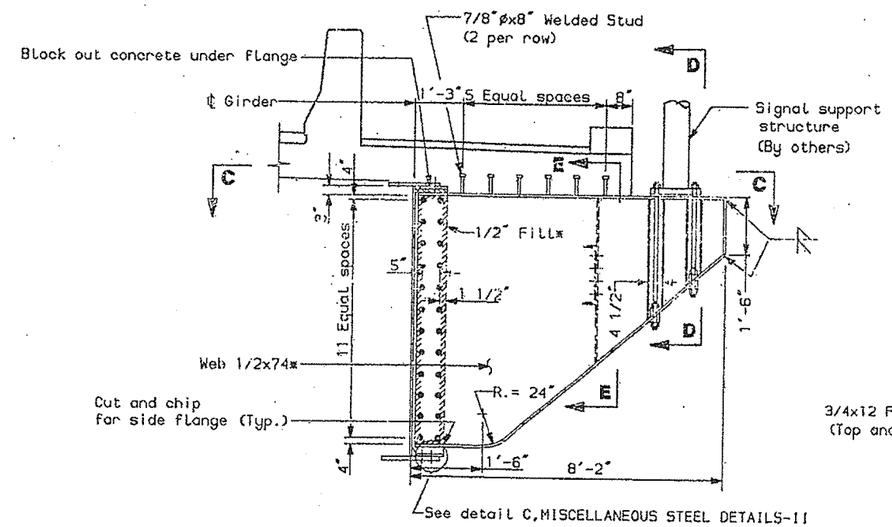

BRACKET DETAILS

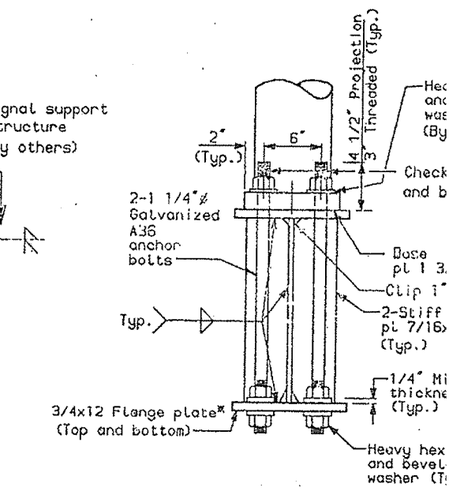

SECTION D-D

Threaded bar notes:

Threaded bars shall be placed on both sides of all interior girders except place only on western face of girder 2. Threaded bars shall also be placed on the inside face of the west exterior girder.

Termination and splicing of threaded bar shall occur at stiffener plates only.

Stiffeners used as termination and splice plates shall be 1/2" thick, minimum. Angle supports shall be used at intermediate locations only.

NOTE:

* AASHTO M270(ASTM A709)Gr. 36.

1"Ø threaded bar, L5x3x3/8, 1 1/4"Ø anchor bolts, and beveled washer shall conform to the requirements of ASTM A36.

1"Ø threaded bars, 1 1/4"Ø anchor bolts, nuts and washers shall be galvanized to the requirements of ASTM A123 and ASTM A153.

All nuts for 1"Ø bar and 1 1/4"Ø anchor bolts shall conform to ASTM A563, heavy hex, grade A.

Standard washers shall conform to ASTM F844.

SOUTH APPROACH
STATE OF MAINE
DEPARTMENT OF TRANSPO
PORTLAND - S. PORTLA
OVER FORE RI
CUMBERLAND CO
MISCELLANE
STEEL DETAIL
SHEET 73 OF 182 AUGUSTA, MA

DESIGN-DETAILED	MCI	EAR, ELS	6-94
CHECKED		PDB	6-94
REVISION			
FIELD CHANGES			

PLANS

sa.gdr.dot

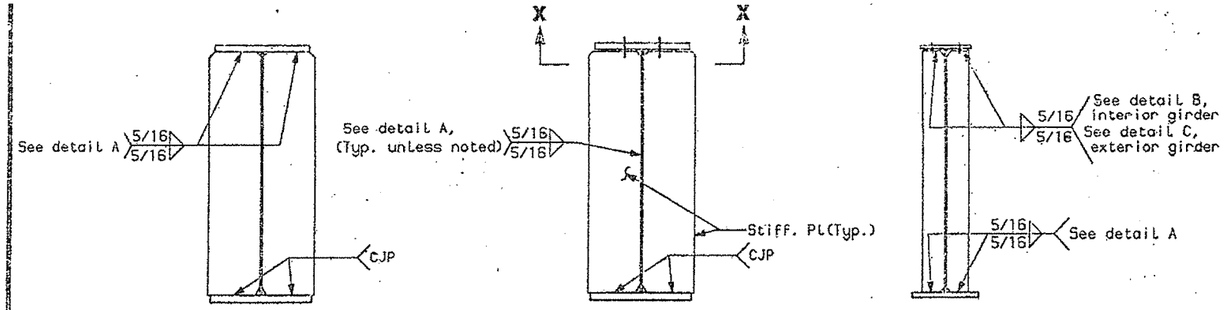

BEARING
(S.Abut.,Piers 4S,9S,13S and S.Bascule Pier)

BEARING
(All other piers)

TYPICAL

CROSS-FRAME STIFFENER DETAIL

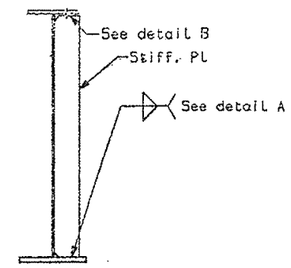

TRANSVERSE STIFFENER DETAIL

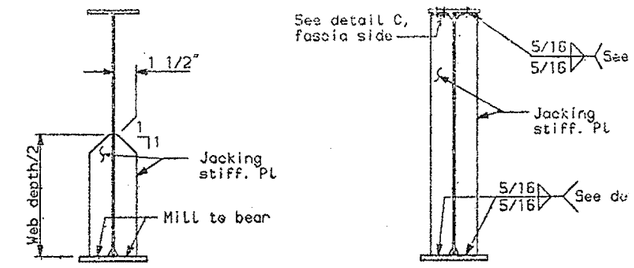

TYPICAL

AT TRAFFIC GATE LOCATIONS

JACKING STIFFENER DETAIL

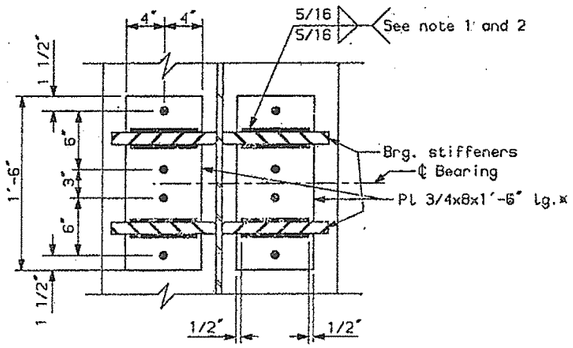

SECTION X-X

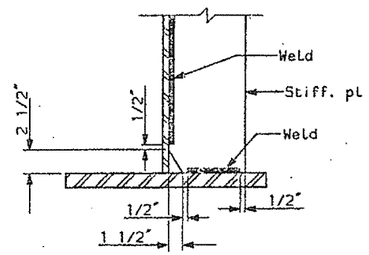

DETAIL A

(See note 3)

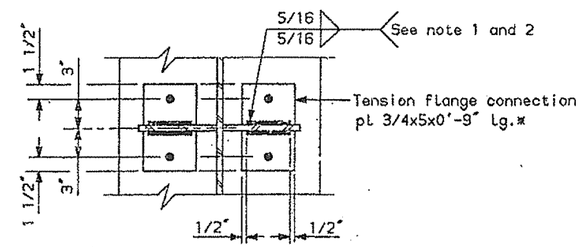

PLAN OF DETAIL B

(Typ. top and bottom flanges, see note 3)

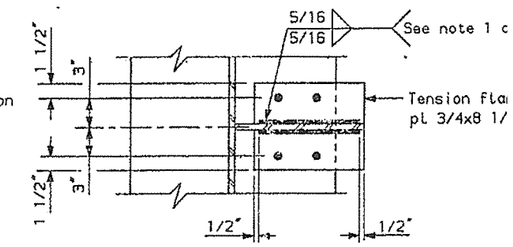

PLAN OF DETAIL C

(Typ. top and bottom flanges, see note 3)

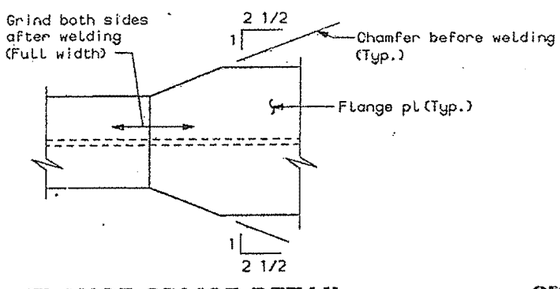

FLANGE SPLICE DETAIL

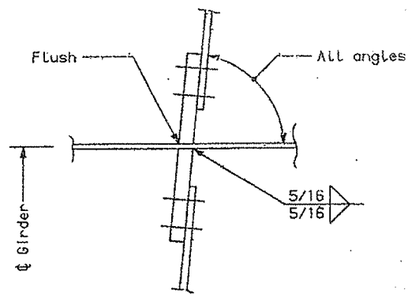

STIFFENER FABRICATION AND CONNECTION DETAIL

(At cross-frame and bearing stiffeners)

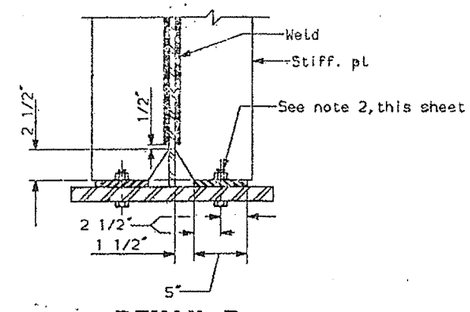

DETAIL B

(Interior girder cross-frame stiffeners shown,
interior and exterior girder transverse stiffeners similar.
Bottom flange shown, top flange similar.)

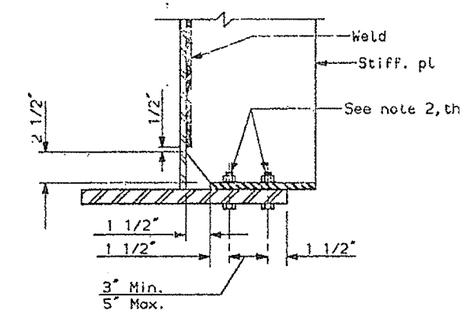

DETAIL C

(Exterior girder,
bottom flange shown, top flange similar.)

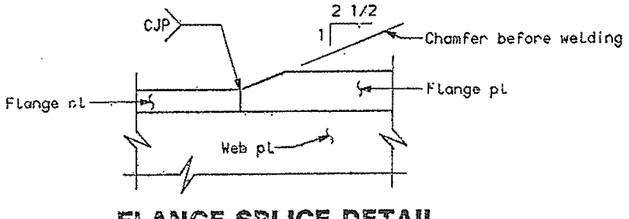

FLANGE SPLICE DETAIL

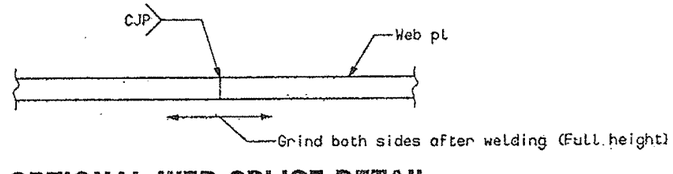

OPTIONAL WEB SPLICE DETAIL

NOTES:

* AASHTO M270 (ASTM A709),Gr. 36.

1. All fillet welds which connect stiffeners to either a flange or web plate, shall be started and stopped approximately 1/2" from the ends or edges of the stiffener plate.
2. Bolt tension-flange connection plate to flange before welding stiffener or diaphragm connection plate to it.
3. Provide tension flange connection plate for the top and/or bottom of all transverse stiffener plates and/or cross-frame stiffener plates located within a flange tension zone. Flange tension zones are indicated on the girder elevation sheets. Otherwise, provide welded flange connection as shown in Detail A.

PROJECT DESIGN ENGINEER	BY	DATE
DESIGN-DETAILED	MCI	ELS 5-94
CHECKED		PDB 6-94
REVISION		
FIELD CHANGES		

PLANS

SOUTH APPROAC
STATE OF MAI
DEPARTMENT OF TRANS

PORTLAND - S. PORTI
OVER FORE R
CUMBERLAND C

MISCELLANI
STEEL DETAI

sa.gdr.dgt.2

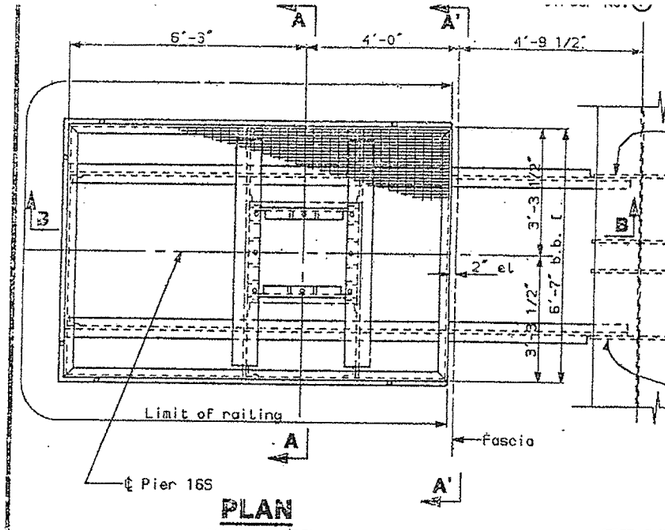

PLAN
(At Pier 16S)

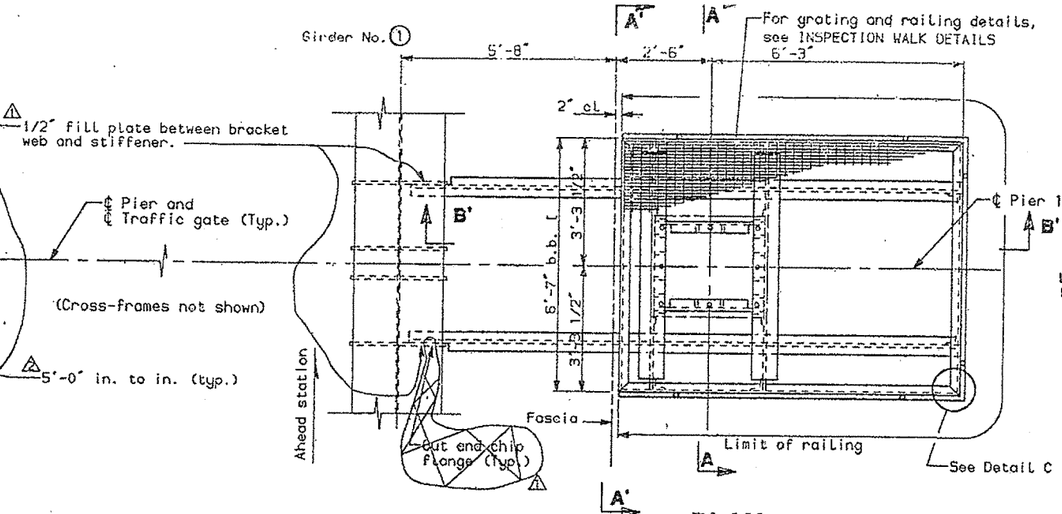

PLAN
(At Pier 15S and 16S)

TRAFFIC GATE MAINTENANCE PLATFORM DETAILS

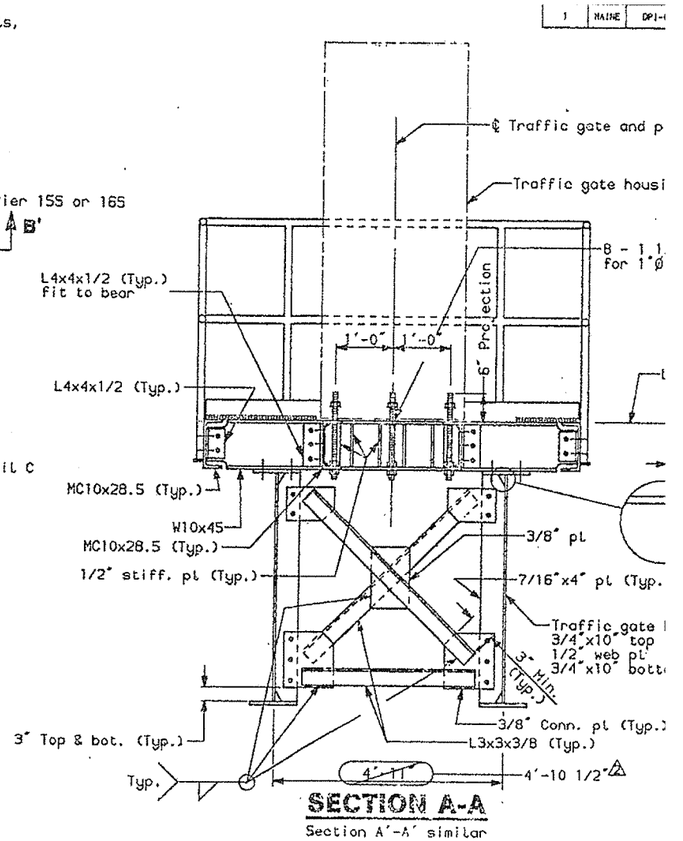

SECTION A-A
Section A'-A' similar

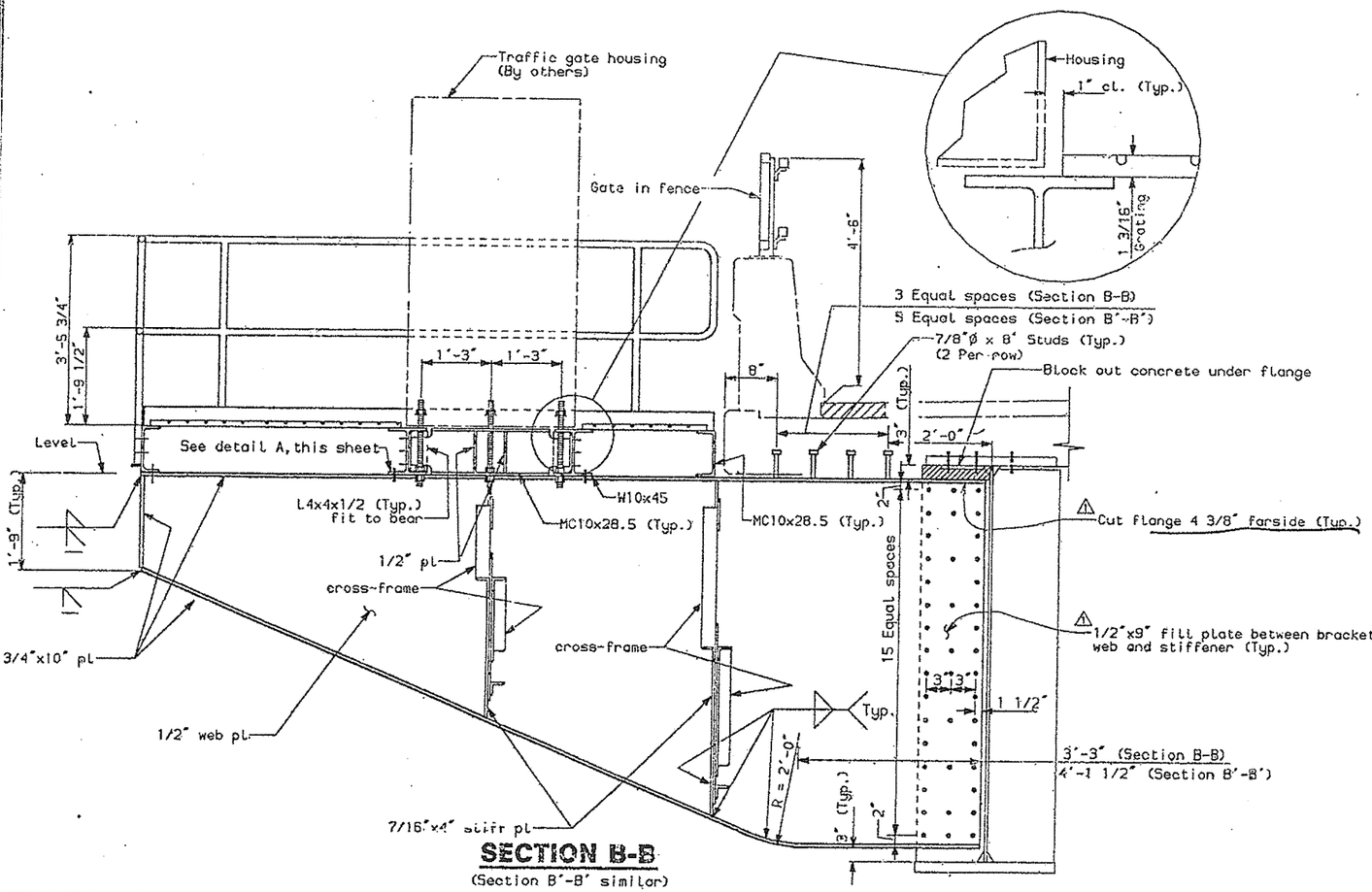

SECTION B-B
(Section B'-B' similar)

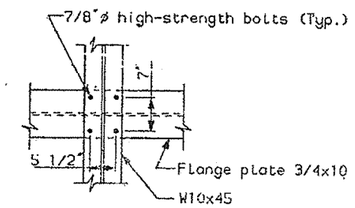

DETAIL A

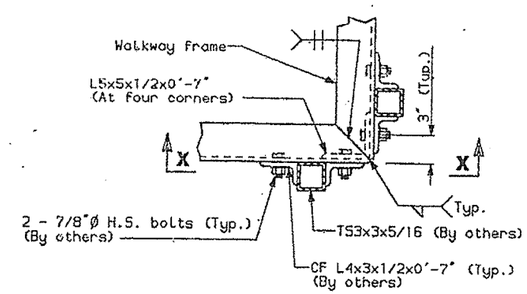

DETAIL C

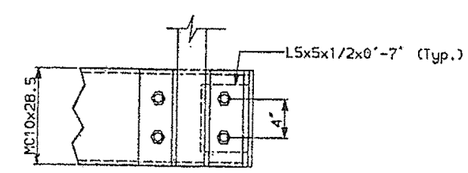

VIEW X-X

NOTES:

Posts and Railings shall be AST
galvanized, see special provisions
All grating shall be galvanized
1"x3/16" bearing bars on 1 3/16" c
mechanically fastened.
All structural steel on this s
shall be AASHTO M270 (ASTM A709)
Gr. 36, unless noted.

△1 Revised per Addendum No. 2.
△2 Revised, 10-7-94

DESIGN-DETAILED	HCB	EAR
CHECKED	HCB	6-94
REVISION	MCJ	6-94
FIELD CHANGES		10-94

PLANS

sa.gdr.det.3

SOUTH APPROACH
STATE OF MAINE
DEPARTMENT OF TRANSP

PORTLAND - S. PORTL
OVER FORE RI
CUMBERLAND CO

MISCELLANE
STEEL DETAILS

SHEET 75 OF 182 AUGUSTA, MA

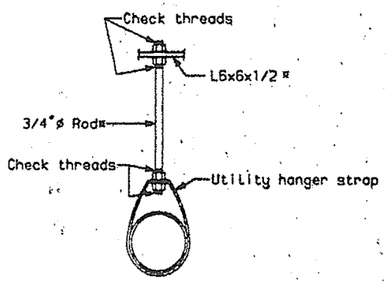

DETAIL A

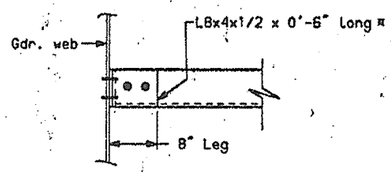

DETAIL B

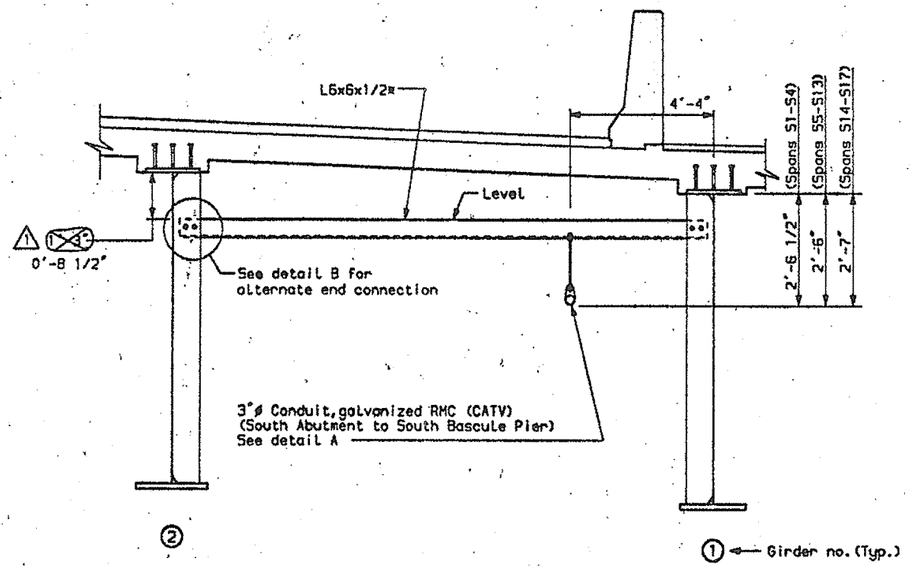

UTILITY SUPPORT AT INTERMEDIATE LOCATIONS

(Supports at cross-frames similar)

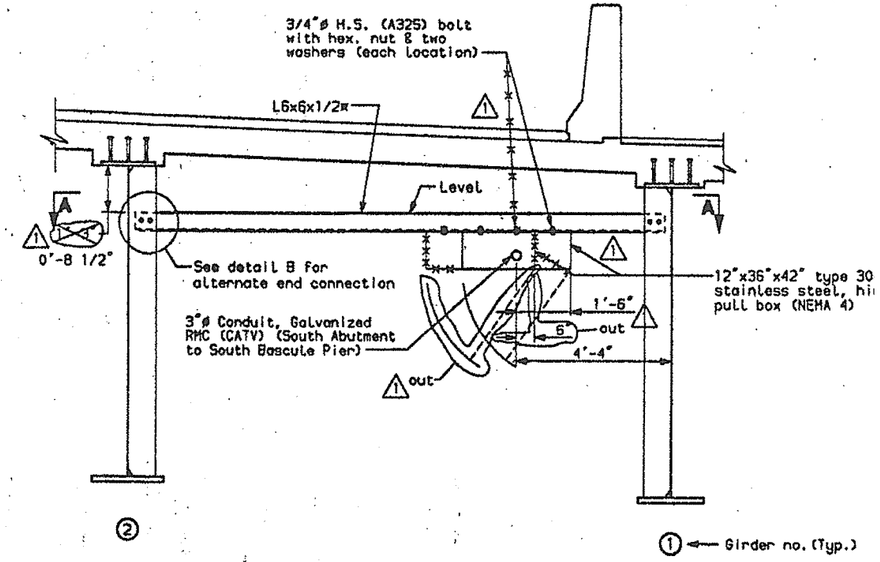

UTILITY ENCLOSURE BOX DETAIL

(Located between cross-frames S6-7, S7-1 and S12-8, S13-1)

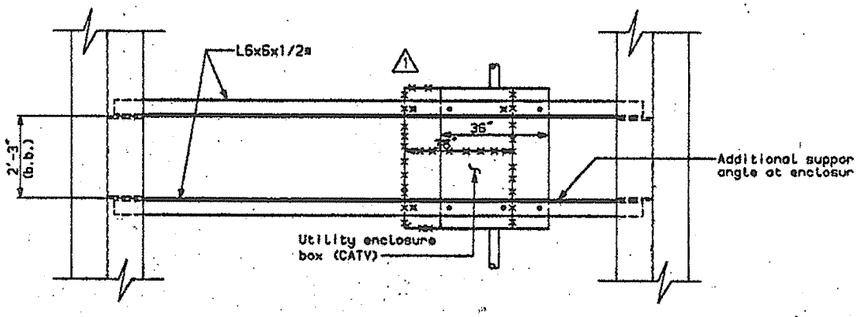

SECTION A-A

(At CATV utility enclosure)

NOTE:

¤ AASHTO M270(ASTM A709)Gr. 36.
Submit details of conduit expansion/deflection fittings and conduit hangers to the Department for approval prior to use.
Pay limit for utility conduits and associated materials N.B.L. 206+39.58 to N.B.L. 236+62.01.

△1 Sheet revised as of 1/19/95.

F.H.W.A. REG. NO.	STATE	PROJECT NU
1	MAINE	DPI-0009

PROJECT DESIGN ENGINEER			
DESIGN-DETAILED	PDB	ELS	6-94
CHECKED	PDB		6-94
REVISION	MCI		1-95
FIELD CHANGES			

PLANS

1-19-95

sa.gdr.det.5.rev

SOUTH APPROACH

STATE OF MAINE
DEPARTMENT OF TRANSPOR

PORTLAND - S. PORTLA
OVER FORE RIV
CUMBERLAND CO

MISCELLANEO
STEEL DETAILS

SHEET 76 OF 182 AUGUSTA, MAI

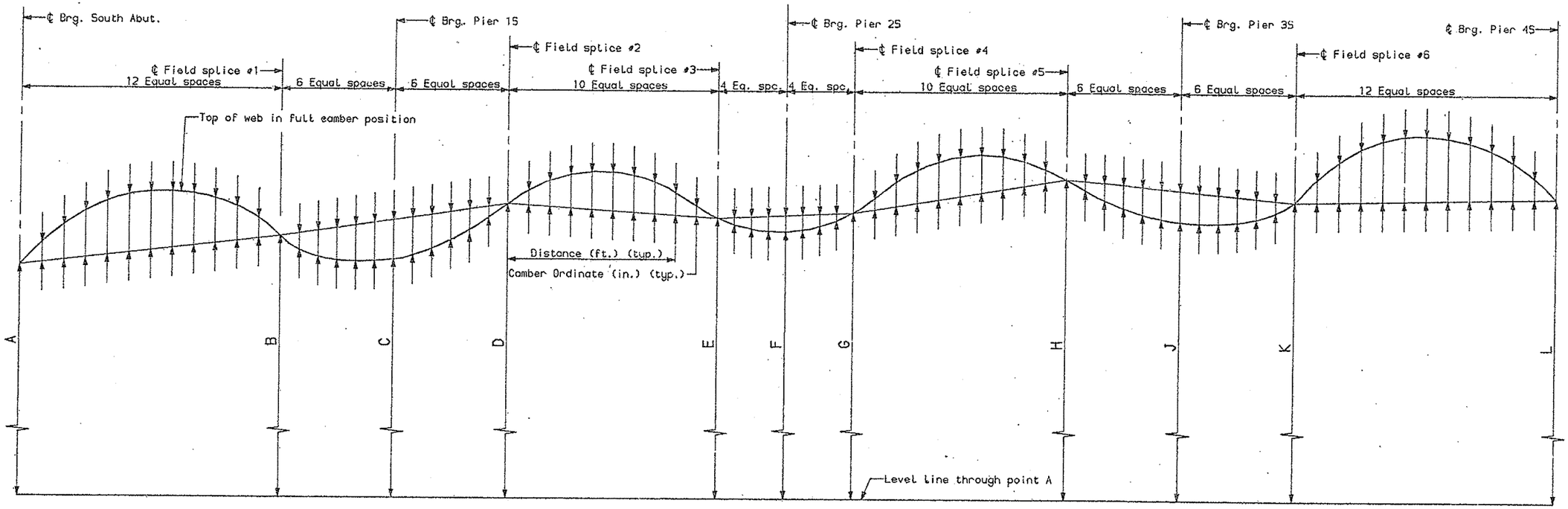

GIRDERS 1 - 7 TYPICAL

PLANS

CHECKED	JRB	6-94
REVISION	RCB	6-94
FIELD CHANGES		

3-17-94
ca.s1s4-1

SOUTH APPROACH S

STATE OF MAINE
DEPARTMENT OF TRANSPORT

PORTLAND - S. PORTLAN
OVER FORE RIVE
CUMBERLAND COU

CAMBER DETA
GIRDERS 1-7 SPANS

SHEET 77 OF 182 AUGUSTA, MAINE

F.H.W.A. REG. NO.	STATE	PROJECT
1	MAINE	DPI-006

GIRDER NUMBER		℄ Brg. So. Abut. A (Ft.)												Splice #1	B (Ft.)	Splice #1						℄ Brg. Pier 1S	C (Ft.)						
①	Distance (Ft.)	0.00	0.00	9.46	18.92	28.38	37.84	47.31	56.77	66.23	75.69	85.15	94.61	104.07	113.53	3.14	0.00	8.45	16.89	25.34	33.78	42.23	50.67	3.88	57.95	65.23	72.50	79.78	87.06	94.34
	Camber Ordinate (in.)		0.00	1.35	2.59	3.65	4.47	5.00	5.23	5.09	4.66	3.92	2.87	1.54	0.00		0.00	-0.61	-1.23	-1.80	-2.26	-2.55	-2.69		-2.53	-2.27	-1.87	-1.35	-0.72	0.00
②	Distance (Ft.)	0.00	0.00	9.57	19.15	28.72	38.30	47.87	57.45	67.02	76.59	86.17	95.74	105.32	114.89	3.16	0.00	8.53	17.05	25.58	34.11	42.64	51.17	3.88	58.53	65.89	73.25	80.61	87.97	95.33
	Camber Ordinate (in.)		0.00	1.41	2.71	3.83	4.68	5.23	5.46	5.32	4.87	4.10	2.98	1.61	0.00		0.00	-0.64	-1.28	-1.86	-2.33	-2.69	-2.77		-2.61	-2.34	-1.94	-1.40	-0.74	0.00
③	Distance (Ft.)	0.00	0.00	9.67	19.35	29.02	38.69	48.37	58.04	67.71	77.39	87.06	96.73	106.41	116.08	3.17	0.00	8.64	17.28	25.92	34.55	43.19	51.83	3.88	59.28	66.72	74.17	81.61	89.05	96.50
	Camber Ordinate (in.)		0.00	1.47	2.80	3.96	4.85	5.41	5.65	5.51	5.05	4.23	3.10	1.66	0.00		0.00	-0.66	-1.32	-1.91	-2.39	-2.71	-2.84		-2.69	-2.40	-1.99	-1.44	-0.77	0.00
④	Distance (Ft.)	0.00	0.00	9.79	19.58	29.38	39.17	48.96	58.76	68.55	78.34	88.13	97.92	107.72	117.51	3.19	0.00	8.71	17.42	26.12	34.83	43.54	52.25	3.88	59.76	67.28	74.79	82.30	89.82	97.33
	Camber Ordinate (in.)		0.00	1.51	2.91	4.09	5.00	5.58	5.83	5.68	5.20	4.37	3.19	1.71	0.00		0.00	-0.66	-1.34	-1.95	-2.43	-2.75	-2.89		-2.74	-2.45	-2.04	-1.46	-0.78	0.00
⑤	Distance (Ft.)	0.00	0.00	9.89	19.78	29.67	39.56	49.45	59.34	69.23	79.13	89.02	98.91	108.80	118.69	3.05	0.00	8.82	17.64	26.46	35.28	44.10	52.92	3.65	60.51	68.11	75.71	83.31	90.90	98.50
	Camber Ordinate (in.)		0.00	1.61	3.09	4.33	5.29	5.90	6.14	5.97	5.45	4.57	3.32	1.78	0.00		0.00	-0.68	-1.37	-1.99	-2.49	-2.83	-2.99		-2.83	-2.55	-2.12	-1.53	-0.82	0.00
⑥	Distance (Ft.)	0.00	0.00	10.00	20.01	30.01	40.02	50.02	60.02	70.03	80.03	90.03	100.04	110.04	120.05	3.07	0.00	8.90	17.80	26.70	35.61	44.51	53.41	3.66	61.09	68.77	76.45	84.13	91.82	99.50
	Camber Ordinate (in.)		0.00	1.62	3.11	4.36	5.29	5.89	6.13	5.94	5.40	4.53	3.29	1.76	0.00		0.00	-0.65	-1.33	-1.96	-2.45	-2.79	-2.96		-2.80	-2.52	-2.09	-1.52	-0.80	0.00
⑦	Distance (Ft.)	0.00	0.00	10.24	20.48	30.73	40.97	51.21	61.45	71.69	81.94	92.18	102.42	112.66	122.90	3.10	0.00	8.74	17.47	26.21	34.95	43.68	52.42	3.67	60.18	67.95	75.71	83.47	91.24	99.00
	Camber Ordinate (in.)		0.00	1.68	3.22	4.52	5.48	6.07	6.31	6.09	5.54	4.63	3.34	1.79	0.00		0.00	-0.63	-1.30	-1.90	-2.37	-2.72	-2.88		-2.75	-2.47	-2.06	-1.50	-0.80	0.00

GIRDER NUMBER		D (Ft.)	Splice #2										Splice #3	E (Ft.)	Splice #3				℄ Brg. Pier 2S	F (Ft.)				Splice #4
①	Distance (Ft.)	4.94	0.00	8.72	17.44	26.17	34.89	43.61	52.34	61.06	69.78	78.51	87.23	6.96	0.00	8.35	16.71	25.06	33.42	7.63	41.84	50.25	58.67	67.09
	Camber Ordinate (in.)		0.00	0.45	0.89	1.27	1.51	1.61	1.56	1.35	0.99	0.52	0.00		0.00	-0.43	-0.80	-1.04	-1.14		-0.98	-0.74	-0.40	0.00
②	Distance (Ft.)	4.94	0.00	8.83	17.65	26.48	35.31	44.13	52.96	61.78	70.61	79.43	88.26	6.97	0.00	8.44	16.88	25.31	33.75	7.63	42.25	50.74	59.24	67.73
	Camber Ordinate (in.)		0.00	0.47	0.92	1.29	1.56	1.66	1.60	1.38	1.00	0.53	0.00		0.00	-0.45	-0.83	-1.08	-1.18		-1.02	-0.77	-0.41	0.00
③	Distance (Ft.)	4.94	0.00	8.92	17.84	26.76	35.68	44.60	53.52	62.44	71.36	80.28	89.20	6.97	0.00	8.54	17.08	25.62	34.16	7.63	42.77	51.37	59.97	68.58
	Camber Ordinate (in.)		0.00	0.48	0.94	1.33	1.59	1.69	1.63	1.42	1.03	0.53	0.00		0.00	-0.47	-0.84	-1.09	-1.20		-1.06	-0.79	-0.42	0.00
④	Distance (Ft.)	4.93	0.00	9.02	18.04	27.06	36.08	45.10	54.12	63.14	72.16	81.18	90.20	6.97	0.00	8.63	17.25	25.88	34.50	7.63	43.19	51.88	60.56	69.25
	Camber Ordinate (in.)		0.00	0.49	0.95	1.35	1.61	1.71	1.66	1.44	1.05	0.56	0.00		0.00	-0.48	-0.86	-1.10	-1.22		-1.06	-0.79	-0.42	0.00
⑤	Distance (Ft.)	4.64	0.00	9.11	18.23	27.34	36.45	45.56	54.68	63.79	72.90	82.02	91.13	6.60	0.00	8.71	17.42	26.12	34.83	7.26	43.60	52.38	61.15	69.92
	Camber Ordinate (in.)		0.00	0.44	0.88	1.24	1.51	1.61	1.57	1.36	0.99	0.52	0.00		0.00	-0.50	-0.90	-1.16	-1.27		-1.10	-0.83	-0.46	0.00
⑥	Distance (Ft.)	4.64	0.00	9.21	18.43	27.64	36.86	46.07	55.29	64.50	73.72	82.94	92.15	6.61	0.00	8.79	17.58	26.38	35.17	7.25	44.02	52.87	61.73	70.58
	Camber Ordinate (in.)		0.00	0.43	0.86	1.22	1.49	1.60	1.56	1.35	0.98	0.51	0.00		0.00	-0.45	-0.82	-1.07	-1.19		-1.06	-0.80	-0.44	0.00
⑦	Distance (Ft.)	4.64	0.00	9.31	18.62	27.93	37.24	46.55	55.86	65.17	74.48	83.79	93.10	6.61	0.00	8.89	17.79	26.69	35.58	7.25	44.68	53.79	62.89	71.99
	Camber Ordinate (in.)		0.00	0.39	0.81	1.18	1.46	1.58	1.54	1.34	0.97	0.50	0.00		0.00	-0.43	-0.76	-1.01	-1.15		-1.02	-0.77	-0.43	0.00

GIRDER NUMBER		G (Ft.)	Splice #4										Splice #5	H (Ft.)	Splice #5						℄ Brg. Pier 3S	J (Ft.)						Splice #6
①	Distance (Ft.)	8.49	0.00	8.53	17.06	25.59	34.13	42.66	51.19	59.72	68.25	76.78	85.31	10.29	0.00	7.56	15.11	22.67	30.22	37.78	45.33	11.13	53.47	61.61	69.75	77.89	86.03	94.17
	Camber Ordinate (in.)		0.00	0.58	1.08	1.48	1.72	1.81	1.76	1.50	1.11	0.59	0.00		0.00	-0.72	-1.36	-1.88	-2.27	-2.52	-2.64		-2.50	-2.18	-1.73	-1.20	-0.61	0.00
②	Distance (Ft.)	8.49	0.00	8.64	17.27	25.91	34.55	43.18	51.82	60.45	69.09	77.73	86.36	10.29	0.00	7.64	15.28	22.92	30.56	38.20	45.83	11.13	54.06	62.28	70.50	78.72	86.95	95.17
	Camber Ordinate (in.)		0.00	0.59	1.13	1.51	1.77	1.86	1.80	1.54	1.14	0.60	0.00		0.00	-0.74	-1.40	-1.94	-2.33	-2.58	-2.71		-2.54	-2.23	-1.79	-1.23	-0.61	0.00
③	Distance (Ft.)	8.50	0.00	8.73	17.45	26.18	34.91	43.64	52.37	61.10	69.83	78.55	87.28	10.29	0.00	7.73	15.45	23.17	30.89	38.61	46.34	11.13	54.64	62.95	71.25	79.56	87.86	96.17
	Camber Ordinate (in.)		0.00	0.60	1.13	1.54	1.79	1.90	1.84	1.58	1.16	0.61	0.00		0.00	-0.75	-1.43	-1.98	-2.38	-2.63	-2.76		-2.58	-2.27	-1.82	-1.26	-0.62	0.00
④	Distance (Ft.)	8.50	0.00	8.80	17.61	26.41	35.21	44.02	52.82	61.63	70.43	79.23	88.04	10.29	0.00	7.79	15.58	23.37	31.17	38.96	46.75	11.11	55.12	63.50	71.87	80.25	88.62	97.00
	Camber Ordinate (in.)		0.00	0.62	1.17	1.58	1.85	1.95	1.89	1.63	1.21	0.64	0.00		0.00	-0.78	-1.47	-2.03	-2.43	-2.69	-2.82		-2.66	-2.33	-1.85	-1.28	-0.62	0.00
⑤	Distance (Ft.)	8.12	0.00	8.88	17.76	26.64	35.52	44.40	53.29	62.17	71.05	79.93	88.81	9.94	0.00	7.86	15.72	23.58	31.44	39.30	47.16	10.78	55.61	64.05	72.50	80.94	89.39	97.83
	Camber Ordinate (in.)		0.00	0.61	1.16	1.59	1.86	1.95	1.89	1.61	1.19	0.62	0.00		0.00	-0.77	-1.46	-2.02	-2.42	-2.68	-2.80		-2.65	-2.33	-1.85	-1.29	-0.64	0.00
⑥	Distance (Ft.)	8.11	0.00	8.99	17.97	26.95	35.94	44.92	53.90	62.89	71.87	80.86	89.84	9.91	0.00	7.94	15.89	23.83	31.78	39.72	47.67	10.76	56.19	64.72	73.25	81.78	90.31	98.83
	Camber Ordinate (in.)		0.00	0.60	1.15	1.59	1.86	1.95	1.89	1.62	1.18	0.62	0.00		0.00	-0.78	-1.48	-2.04	-2.45	-2.71	-2.84		-2.66	-2.34	-1.87	-1.29	-0.64	0.00
⑦	Distance (Ft.)	8.11	0.00	9.02	18.04	27.06	36.08	45.10	54.12	63.14	72.16	81.18	90.20	9.90	0.00	8.03	16.06	24.09	32.11	40.14	48.17	10.75	56.81	65.45	74.09	82.72	91.36	100.00
	Camber Ordinate (in.)		0.00	0.61	1.17	1.60	1.86	1.95	1.89	1.61	1.17	0.60	0.00		0.00	-0.79	-1.48	-2.04	-2.45	-2.73	-2.87		-2.69	-2.38	-1.89	-1.31	-0.65	0.00

GIRDER NUMBER		K (Ft.)	Splice #6												℄ Brg. Pier 4S	L (Ft.)
①	Distance (Ft.)	12.48	0.00	9.48	18.97	28.46	37.95	47.44	56.93	66.41	75.90	85.39	94.88	104.37	113.85	14.34
	Camber Ordinate (in.)		0.00	1.38	2.59	3.59	4.29	4.72	4.88	4.70	4.24	3.50	2.53	1.35	0.00	
②	Distance (Ft.)	12.49	0.00	9.60	19.20	28.80	38.40	48.01	57.61	67.21	76.81	86.41	96.01	105.61	115.21	14.34
	Camber Ordinate (in.)		0.00	1.43	2.67	3.71	4.43	4.87	5.03	4.84	4.37	3.61	2.59	1.39	0.00	
③	Distance (Ft.)	12.50	0.00	9.71	19.43	29.14	38.86	48.57	58.29	68.00	77.72	87.43	97.15	106.86	116.57	14.34
	Camber Ordinate (in.)		0.00	1.46	2.74	3.82	4.57	5.02	5.19	4.98	4.48	3.69	2.65	1.42	0.00	
④	Distance (Ft.)	12.47	0.00	9.79	19.58	29.37	39.16	48.95	58.74	68.53	78.32	88.11	97.90	107.69	117.48	14.30
	Camber Ordinate (in.)		0.00	1.48	2.79	3.87	4.63	5.09	5.25	5.05	4.53	3.74	2.68	1.44	0.00	
⑤	Distance (Ft.)	12.17	0.00	9.87	19.73	29.60	39.47	49.33	59.20	69.06	78.93	88.80	98.66	108.53	118.40	14.01
	Camber Ordinate (in.)		0.00	1.52	2.84	3.95	4.73	5.19	5.37	5.17	4.65	3.82	2.75	1.47	0.00	
⑥	Distance (Ft.)	12.16	0.00	9.98	19.96	29.94	39.92	49.90	59.88	69.86	79.84	89.82	99.80	109.78	119.76	14.00
	Camber Ordinate (in.)		0.00	1.54	2.90	4.02	4.92	5.29	5.47	5.26	4.74	3.90	2.80	1.49	0.00	
⑦	Distance (Ft.)	12.16	0.00	10.08	20.16	30.24	40.32	50.39	60.47	70.55	80.63	90.71	100.79	110.87	120.94	13.99
	Camber Ordinate (in.)		0.00	1.58	2.98	4.13	4.94	5.43	5.61	5.41	4.88	4.02	2.89	1.54	0.00	

NOTES:

Camber ordinates are computed for all dead load deflections and for the curvature of the finished profile grade.

DESIGN-DETAILED	JAB	6-94
CHECKED	HCB	6-94
REVISION		
FIELD CHANGES		

PLANS

3-17-94
ca.s1s4-2

SOUTH APPROACH S

STATE OF MAINE
DEPARTMENT OF TRANSPOR

PORTLAND - S. PORTLAI
OVER FORE RIVI
CUMBERLAND COU

CAMBER DETA
GIRDERS 1-7 SPANS

SHEET 78 OF 182 AUGUSTA, MAI

REG. NO.	STATE	PROJECT N
1	MAINE	DPI-0068

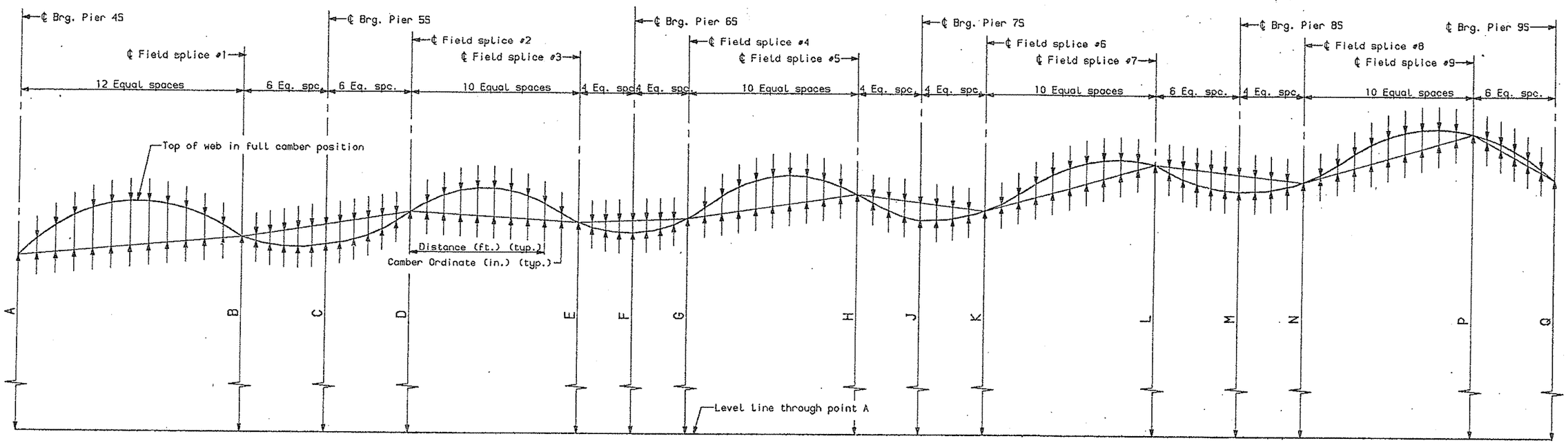

GIRDERS 1 - 6 TYPICAL

PLANS

DESIGN-DETAILED	JAB	6-94
CHECKED	HCB	6-94
REVISION		
FIELD CHANGES		

3-17-94
ca.s5s9-1

SOUTH APPROACH S

STATE OF MAINE
DEPARTMENT OF TRANSPORT

PORTLAND - S. PORTLAN
OVER FORE RIVE
CUMBERLAND COU

CAMBER DETA
GIRDERS 1-6 SPANS

SHEET 79 OF 182 AUGUSTA, MAIN

F.H.W.A. REG. NO.	STATE	PROJECT
1	MAINE	DPI-000

GIRDER NUMBER		℄ Brg. Pier 4S A (ft.)													Splice #1	B (ft.)	Splice #1						℄ Brg. Pier 5S	C (ft.)						Splice #2
①	Distance (ft.)	0.00	0.00	9.41	18.81	28.21	37.62	47.02	56.43	65.83	75.24	84.64	94.05	103.45	112.86	2.48	0.00	8.30	16.61	24.91	33.22	41.53	49.83	3.00	58.14	66.44	74.75	83.05	91.36	99.66
	Camber Ordinate (in.)		0.00	1.33	2.47	3.44	4.17	4.63	4.81	4.69	4.27	3.58	2.60	1.38	0.00		0.00	-0.59	-1.20	-1.75	-2.21	-2.53	-2.69		-2.58	-2.29	-1.86	-1.32	-0.58	0.00
②	Distance (ft.)	0.00	0.00	9.52	19.03	28.55	38.06	47.58	57.10	66.61	76.13	85.64	95.16	104.68	114.19	2.51	0.00	8.42	16.84	25.25	33.67	42.09	50.50	3.00	58.92	67.34	75.75	84.17	92.59	101.00
	Camber Ordinate (in.)		0.00	1.40	2.61	3.62	4.41	4.91	5.10	4.96	4.52	3.79	2.76	1.46	0.00		0.00	-0.62	-1.25	-1.84	-2.31	-2.64	-2.81		-2.68	-2.40	-1.96	-1.39	-0.73	0.00
③	Distance (ft.)	0.00	0.00	9.63	19.27	28.90	38.54	48.17	57.81	67.44	77.07	86.71	96.34	105.98	115.61	2.53	0.00	8.51	17.03	25.54	34.06	42.57	51.08	3.00	59.60	68.11	76.63	85.14	93.65	102.17
	Camber Ordinate (in.)		0.00	1.46	2.73	3.80	4.63	5.15	5.35	5.20	4.74	3.97	2.89	1.54	0.00		0.00	-0.66	-1.29	-1.90	-2.39	-2.73	-2.91		-2.77	-2.48	-2.03	-1.43	-0.75	0.00
④	Distance (ft.)	0.00	0.00	9.75	19.50	29.26	39.01	48.76	58.52	68.27	78.02	87.77	97.53	107.28	117.03	2.55	0.00	8.61	17.22	25.83	34.44	43.05	51.67	3.00	60.28	68.89	77.50	86.11	94.72	103.33
	Camber Ordinate (in.)		0.00	1.52	2.83	3.95	4.82	5.34	5.55	5.39	4.92	4.13	3.00	1.60	0.00		0.00	-0.65	-1.32	-1.93	-2.42	-2.78	-2.96		-2.82	-2.52	-2.06	-1.46	-0.77	0.00
⑤	Distance (ft.)	0.00	0.00	9.86	19.73	29.59	39.46	49.32	59.18	69.05	78.91	88.77	98.64	108.50	118.36	2.58	0.00	8.73	17.45	26.17	34.89	43.61	52.34	3.02	61.06	69.78	78.50	87.23	95.95	104.67
	Camber Ordinate (in.)		0.00	1.58	2.94	4.10	5.00	5.55	5.76	5.60	5.08	4.25	3.08	1.64	0.00		0.00	-0.66	-1.31	-1.93	-2.42	-2.79	-2.96		-2.84	-2.53	-2.07	-1.47	-0.77	0.00
⑥	Distance (ft.)	0.00	0.00	9.98	19.96	29.95	39.93	49.91	59.89	69.87	79.85	89.84	99.82	109.80	119.78	2.60	0.00	8.82	17.64	26.46	35.28	44.10	52.92	3.03	61.74	70.56	79.38	88.20	97.02	105.84
	Camber Ordinate (in.)		0.00	1.62	3.04	4.24	5.18	5.76	5.96	5.78	5.26	4.40	3.19	1.69	0.00		0.00	-0.66	-1.31	-1.92	-2.41	-2.78	-2.97		-2.83	-2.52	-2.07	-1.47	-0.78	0.00

GIRDER NUMBER		D (ft.)	Splice #2										Splice #3	E (ft.)	Splice #3				℄ Brg. Pier 6S	F (ft.)				Splice #4
①	Distance (ft.)	3.96	0.00	7.64	15.27	22.90	30.53	38.16	45.79	53.43	61.06	68.69	76.32	5.36	0.00	9.54	19.08	28.63	38.17	6.00	46.23	54.29	62.36	70.42
	Camber Ordinate (in.)		0.00	0.29	0.52	0.78	0.93	0.95	0.89	0.77	0.57	0.30	0.00		0.00	-0.52	-0.94	-1.21	-1.30		-1.13	-0.85	-0.47	0.00
②	Distance (ft.)	3.96	0.00	7.73	15.45	23.17	30.90	38.62	46.34	54.07	61.79	69.51	77.24	5.36	0.00	9.64	19.29	28.94	38.58	6.00	46.75	54.91	63.08	71.25
	Camber Ordinate (in.)		0.00	0.28	0.54	0.80	0.95	0.99	0.93	0.80	0.59	0.31	0.00		0.00	-0.54	-0.97	-1.25	-1.34		-1.20	-0.89	-0.48	0.00
③	Distance (ft.)	3.96	0.00	7.81	15.63	23.44	31.26	39.07	46.89	54.70	62.52	70.34	78.15	5.36	0.00	9.77	19.54	29.31	39.08	6.00	47.35	55.63	63.90	72.17
	Camber Ordinate (in.)		0.00	0.29	0.56	0.81	0.97	1.01	0.94	0.81	0.62	0.32	0.00		0.00	-0.57	-1.01	-1.29	-1.39		-1.22	-0.91	-0.50	0.00
④	Distance (ft.)	3.95	0.00	7.92	15.83	23.75	31.66	39.58	47.50	55.41	63.33	71.24	79.16	5.36	0.00	9.87	19.75	29.62	39.50	6.00	47.87	56.25	64.62	73.00
	Camber Ordinate (in.)		0.00	0.30	0.54	0.79	0.96	1.00	0.94	0.80	0.60	0.32	0.00		0.00	-0.57	-1.03	-1.32	-1.42		-1.24	-0.94	-0.50	0.00
⑤	Distance (ft.)	3.95	0.00	8.00	16.00	24.00	32.00	40.00	47.99	55.99	63.99	71.99	79.99	5.36	0.00	10.00	20.00	30.00	40.00	6.02	48.46	56.92	65.37	73.83
	Camber Ordinate (in.)		0.00	0.28	0.51	0.75	0.91	0.95	0.88	0.76	0.57	0.29	0.00		0.00	-0.56	-1.01	-1.30	-1.39		-1.22	-0.91	-0.50	0.00
⑥	Distance (ft.)	3.95	0.00	8.09	16.19	24.29	32.39	40.49	48.59	56.69	64.79	72.89	80.99	5.36	0.00	10.10	20.20	30.31	40.41	6.03	48.98	57.54	66.10	74.66
	Camber Ordinate (in.)		0.00	0.23	0.47	0.70	0.85	0.89	0.83	0.72	0.54	0.27	0.00		0.00	-0.55	-0.98	-1.27	-1.38		-1.19	-0.90	-0.50	0.00

GIRDER NUMBER		G (ft.)	Splice #4										Splice #5	H (ft.)	Splice #5				℄ Brg. Pier 7S	J (ft.)				Splice #6
①	Distance (ft.)	6.74	0.00	9.39	18.78	28.17	37.56	46.95	56.34	65.73	75.12	84.51	93.90	8.46	0.00	9.54	19.08	28.62	38.16	9.15	47.77	57.37	66.98	76.58
	Camber Ordinate (in.)		0.00	0.68	1.30	1.76	2.06	2.21	2.09	1.74	1.31	0.69	0.00		0.00	-1.19	-1.94	-2.15	-2.14		-1.80	-1.31	-0.69	0.00
②	Distance (ft.)	6.75	0.00	9.50	19.01	28.52	38.02	47.53	57.04	66.55	76.05	85.56	95.07	8.47	0.00	9.64	19.29	28.93	38.58	9.09	48.27	57.95	67.64	77.33
	Camber Ordinate (in.)		0.00	0.71	1.38	1.86	2.20	2.34	2.22	1.85	1.37	0.73	0.00		0.00	-0.97	-1.64	-1.91	-1.97		-1.68	-1.25	-0.67	0.00
③	Distance (ft.)	6.76	0.00	9.61	19.23	28.84	38.46	48.07	57.69	67.30	76.92	86.53	96.15	8.48	0.00	9.77	19.54	29.31	39.08	9.02	48.83	58.58	68.33	78.08
	Camber Ordinate (in.)		0.00	0.76	1.45	1.95	2.29	2.45	2.32	1.93	1.43	0.77	0.00		0.00	-0.73	-1.31	-1.64	-1.77		-1.55	-1.18	-0.65	0.00
④	Distance (ft.)	6.77	0.00	9.73	19.46	29.19	38.93	48.66	58.39	68.12	77.85	87.59	97.32	8.49	0.00	9.87	19.75	29.62	39.50	8.97	49.33	59.16	69.00	78.83
	Camber Ordinate (in.)		0.00	0.77	1.48	2.00	2.35	2.50	2.38	1.98	1.47	0.79	0.00		0.00	-0.54	-1.03	-1.41	-1.60		-1.44	-1.13	-0.62	0.00
⑤	Distance (ft.)	6.78	0.00	9.87	19.73	29.60	39.47	49.33	59.20	69.06	78.93	88.79	98.66	8.51	0.00	9.96	19.92	29.87	39.83	8.92	49.75	59.67	69.58	79.50
	Camber Ordinate (in.)		0.00	0.78	1.50	2.01	2.37	2.52	2.39	1.99	1.49	0.79	0.00		0.00	-0.25	-0.64	-1.07	-1.32		-1.23	-0.99	-0.55	0.00
⑥	Distance (ft.)	6.80	0.00	9.97	19.93	29.90	39.87	49.83	59.80	69.76	79.73	89.69	99.66	8.52	0.00	10.10	20.21	30.31	40.42	8.88	50.42	60.42	70.41	80.41
	Camber Ordinate (in.)		0.00	0.77	1.50	2.01	2.38	2.53	2.40	2.00	1.49	0.79	0.00		0.00	-0.05	-0.35	-0.81	-1.13		-1.09	-0.90	-0.52	0.00

NOTES:

Camber ordinates are computed for all dead load deflections and for the curvature of the finished profile grade.

DESIGN-DETAILED	JAB	6-94
CHECKED	JAB	6-94
REVISION	RCB	
FIELD CHANGES		

PLANS

3-17-94
ca.s5s9--2

SOUTH APPROACH

STATE OF MAINE
DEPARTMENT OF TRANSPOR

PORTLAND - S. PORTLA
OVER FORE RIV
CUMBERLAND CO

CAMBER DETA
GIRDERS 1-6 SPANS

REG. NO.	STATE	PROJECT
1	MAINE	DPI-00

GIRDER NUMBER		K(ft.)	Splice #6										Splice #7	L (ft.)	Splice #7						℄ Brg. Pier 8S	M (ft.)				Splice #8
①	Distance (ft.)	10.20	0.00	8.75	17.51	26.26	35.01	43.76	52.51	61.27	70.02	78.77	87.52	12.17	0.00	8.85	17.70	26.54	35.39	44.24	53.09	13.29	63.23	73.38	83.52	93.67
	Camber Ordinate (in.)		0.00	0.63	1.22	1.68	1.84	1.87	1.74	1.43	0.94	0.48	0.00		0.00	-0.80	-1.48	-2.05	-2.45	-2.70	-2.75		-2.37	-1.77	-0.95	0.00
②	Distance (ft.)	10.04	0.00	8.75	17.50	26.25	35.00	43.75	52.50	61.25	70.00	78.75	87.50	11.90	0.00	8.85	17.70	26.54	35.39	44.24	53.08	12.97	63.23	73.38	83.52	93.67
	Camber Ordinate (in.)		0.00	0.51	0.97	1.32	1.51	1.60	1.53	1.27	0.86	0.43	0.00		0.00	-0.79	-1.48	-2.04	-2.44	-2.69	-2.73		-2.36	-1.76	-0.94	0.00
③	Distance (ft.)	9.85	0.00	8.76	17.52	26.27	35.03	43.79	52.54	61.30	70.06	78.81	87.57	11.47	0.00	8.85	17.70	26.54	35.39	44.24	53.08	12.38	63.23	73.38	83.52	93.67
	Camber Ordinate (in.)		0.00	0.50	0.96	1.32	1.51	1.61	1.53	1.28	0.87	0.45	0.00		0.00	-0.79	-1.45	-2.01	-2.41	-2.65	-2.69		-2.33	-1.75	-0.93	0.00
④	Distance (ft.)	9.71	0.00	8.75	17.51	26.26	35.02	43.77	52.53	61.28	70.04	78.79	87.55	11.14	0.00	8.85	17.69	26.54	35.39	44.24	53.08	11.93	63.23	73.38	83.52	93.67
	Camber Ordinate (in.)		0.00	0.49	0.94	1.28	1.47	1.56	1.50	1.25	0.85	0.43	0.00		0.00	-0.77	-1.42	-1.97	-2.36	-2.60	-2.64		-2.30	-1.72	-0.92	0.00
⑤	Distance (ft.)	9.54	0.00	8.75	17.50	26.26	35.01	43.76	52.52	61.27	70.02	78.78	87.53	10.71	0.00	8.85	17.69	26.54	35.39	44.24	53.08	11.35	63.23	73.37	83.52	93.67
	Camber Ordinate (in.)		0.00	0.46	0.89	1.22	1.41	1.49	1.44	1.21	0.82	0.43	0.00		0.00	-0.72	-1.36	-1.89	-2.27	-2.49	-2.53		-2.20	-1.66	-0.88	0.00
⑥	Distance (ft.)	9.41	0.00	8.76	17.51	26.26	35.01	43.76	52.51	61.26	70.02	78.77	87.52	10.42	0.00	8.85	17.69	26.54	35.39	44.23	53.08	10.96	63.23	73.37	83.52	93.67
	Camber Ordinate (in.)		0.00	0.42	0.82	1.13	1.31	1.40	1.35	1.13	0.78	0.40	0.00		0.00	-0.69	-1.30	-1.81	-2.19	-2.40	-2.45		-2.12	-1.57	-0.85	0.00

GIRDER NUMBER		N (ft.)	Splice #8										Splice #9	P (ft.)	Splice #9						℄ Brg. Pier 9S	Q (ft.)
①	Distance (ft.)	14.55	0.00	10.14	20.27	30.41	40.55	50.68	60.82	70.96	81.10	91.23	101.37	17.04	0.00	6.43	12.86	19.29	25.72	32.15	38.59	17.28
	Camber Ordinate (in.)		0.00	1.12	2.17	3.04	3.63	3.91	3.88	3.45	2.64	1.50	0.00		0.00	0.30	0.43	0.46	0.40	0.27	0.00	
②	Distance (ft.)	14.19	0.00	10.08	20.16	30.24	40.33	50.41	60.49	70.58	80.66	90.74	100.83	16.58	0.00	6.35	12.69	19.04	25.39	31.73	38.08	16.81
	Camber Ordinate (in.)		0.00	1.09	2.11	2.95	3.53	3.79	3.76	3.35	2.56	1.45	0.00		0.00	0.27	0.40	0.44	0.38	0.25	0.00	
③	Distance (ft.)	13.47	0.00	10.03	20.05	30.08	40.11	50.14	60.17	70.20	80.23	90.25	100.28	15.57	0.00	6.27	12.53	18.80	25.06	31.32	37.59	15.70
	Camber Ordinate (in.)		0.00	1.05	2.04	2.86	3.42	3.66	3.64	3.26	2.50	1.41	0.00		0.00	0.25	0.36	0.40	0.36	0.25	0.00	
④	Distance (ft.)	12.92	0.00	9.96	19.93	29.89	39.86	49.82	59.79	69.76	79.72	89.69	99.66	14.78	0.00	6.19	12.39	18.58	24.78	30.97	37.16	14.86
	Camber Ordinate (in.)		0.00	1.01	1.95	2.73	3.27	3.49	3.47	3.12	2.38	1.34	0.00		0.00	0.25	0.35	0.39	0.34	0.24	0.00	
⑤	Distance (ft.)	12.21	0.00	9.91	19.82	29.73	39.64	49.55	59.47	69.38	79.29	89.20	99.11	13.77	0.00	6.11	12.23	18.34	24.45	30.56	36.67	13.76
	Camber Ordinate (in.)		0.00	0.96	1.85	2.60	3.10	3.31	3.28	2.96	2.26	1.29	0.00		0.00	0.23	0.33	0.36	0.32	0.22	0.00	
⑥	Distance (ft.)	11.73	0.00	9.85	19.71	29.57	39.42	49.28	59.14	69.00	78.85	88.71	98.57	13.04	0.00	6.03	12.06	18.08	24.11	30.14	36.17	12.96
	Camber Ordinate (in.)		0.00	0.95	1.84	2.58	3.09	3.33	3.33	2.99	2.26	1.27	0.00		0.00	0.22	0.32	0.34	0.31	0.22	0.00	

NOTES:

Camber ordinates are computed for all dead load deflections and for the curvature of the finished profile grade.

DESIGN-DETAILED	JAB	6-94
CHECKED	HCB	6-94
REVISION	JAB	
FIELD CHANGES		

PLANS

3-17-94
ca.s5s9-3

SOUTH APPROACH

STATE OF MAINE
DEPARTMENT OF TRANSPO

PORTLAND - S. PORTLA
OVER FORE RI
CUMBERLAND CO

CAMBER DET.
GIRDERS 1-6 SPANS

SHEET 81 OF 182 AUGUSTA, MA

REG. NO.	STATE	PROJECT
1	MAINE	DPI-006

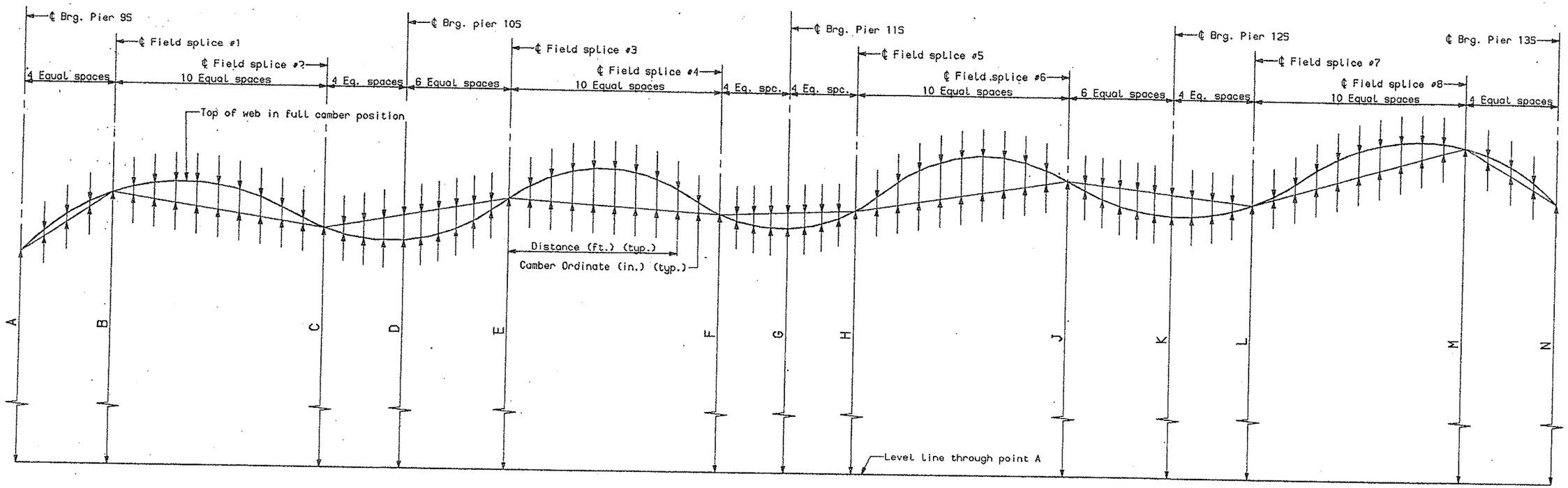

GIRDERS 1 - 6 TYPICAL

PLANS			
CHECKED	HCB	6-94	
REVISION			
FIELD CHANGES			

3-17-94
ca.s10s13-1

SOUTH APPROACH S

STATE OF MAINE
DEPARTMENT OF TRANSPORT

PORTLAND - S. PORTLAN
OVER FORE RIVE
CUMBERLAND COU

CAMBER DETA
GIRDERS 1-6 SPANS S1

SHEET 82 OF 182 AUGUSTA, MAINE

GIRDER NUMBER		℄ Brg. Pier 9S A (ft.)					Splice #1	B (ft.)	Splice #1										Splice #2	C (ft.)	Splice #2				℄ Brg. Pier 10S	D (ft.)					
①	Distance (ft.)	0.00	0.00	10.44	20.87	31.31	41.75	1.42	0.00	10.38	20.77	31.15	41.53	51.92	62.30	72.68	83.06	93.44	103.84	2.90	0.00	9.44	18.87	28.31	37.75	3.24	45.91	54.08	62.25	70.41	78.58
	Camber Ordinate (in.)		0.00	0.68	0.88	0.61	0.00		0.00	1.53	2.69	3.47	3.88	3.89	3.58	2.99	2.10	1.06	0.00		0.00	-0.84	-1.50	-1.98	-2.28		-2.25	-2.06	-1.73	-1.26	-0.67
②	Distance (ft.)	0.00	0.00	10.31	20.62	30.93	41.25	1.38	0.00	10.26	20.52	30.77	41.03	51.29	61.56	71.81	82.06	92.32	102.59	2.87	0.00	9.31	18.62	27.94	37.25	3.22	45.29	53.33	61.38	69.42	77.46
	Camber Ordinate (in.)		0.00	0.61	0.79	0.55	0.00		0.00	1.45	2.56	3.32	3.70	3.69	3.41	2.82	2.00	1.01	0.00		0.00	-0.81	-1.47	-1.94	-2.22		-2.19	-2.00	-1.68	-1.23	-0.66
③	Distance (ft.)	0.00	0.00	10.17	20.33	30.50	40.67	1.30	0.00	10.12	20.23	30.35	40.47	50.58	60.70	70.81	80.93	91.05	101.16	2.81	0.00	9.25	18.50	27.75	37.00	3.18	44.96	52.92	60.88	68.84	76.79
	Camber Ordinate (in.)		0.00	0.40	0.52	0.39	0.00		0.00	1.37	2.43	3.14	3.50	3.50	3.24	2.70	1.90	0.96	0.00		0.00	-0.78	-1.44	-1.88	-2.17		-2.13	-1.95	-1.63	-1.20	-0.65
④	Distance (ft.)	0.00	0.00	10.04	20.08	30.12	40.17	1.24	0.00	9.99	19.98	29.97	39.97	49.96	59.95	69.94	79.93	89.92	99.91	2.76	0.00	9.13	18.25	27.38	36.50	3.14	44.34	52.17	60.00	67.84	75.67
	Camber Ordinate (in.)		0.00	0.24	0.32	0.29	0.00		0.00	1.30	2.28	2.96	3.30	3.30	3.05	2.54	1.79	0.91	0.00		0.00	-0.76	-1.37	-1.80	-2.07		-2.03	-1.84	-1.54	-1.12	-0.60
⑤	Distance (ft.)	0.00	0.00	9.90	19.79	29.69	39.59	1.15	0.00	9.87	19.75	29.62	39.50	49.37	59.25	69.12	79.00	88.87	98.75	2.69	0.00	9.00	18.00	27.00	36.00	3.10	43.75	51.50	59.25	67.00	74.75
	Camber Ordinate (in.)		0.00	0.00	0.05	0.13	0.00		0.00	1.20	2.14	2.76	3.08	3.08	2.84	2.37	1.67	0.84	0.00		0.00	-0.71	-1.28	-1.69	-1.94		-1.89	-1.72	-1.45	-1.04	-0.57
⑥	Distance (ft.)	0.00	0.00	9.77	19.54	29.32	39.09	1.07	0.00	9.75	19.50	29.25	39.00	48.75	58.50	68.25	78.00	87.75	97.50	2.63	0.00	8.87	17.75	26.62	35.50	3.06	43.12	50.75	58.37	66.00	73.62
	Camber Ordinate (in.)		0.00	-0.21	-0.23	-0.03	0.00		0.00	1.10	1.95	2.51	2.80	2.79	2.58	2.15	1.52	0.76	0.00		0.00	-0.65	-1.18	-1.57	-1.79		-1.75	-1.60	-1.34	-0.95	-0.51

GIRDER NUMBER		E (ft.)	Splice #3										Splice #4	F (ft.)	Splice #4				℄ Brg. Pier 11S	G (ft.)				Splice #5
①	Distance (ft.)	4.11	0.00	10.41	20.82	31.23	41.65	52.06	62.47	72.88	83.29	93.71	104.12	5.94	0.00	7.96	15.91	23.87	31.83	6.43	39.79	47.75	55.71	63.66
	Camber Ordinate (in.)		0.00	0.51	1.04	1.49	1.79	1.91	1.84	1.56	1.10	0.55	0.00		0.00	-0.42	-0.75	-0.97	-1.07		-0.97	-0.75	-0.42	0.00
②	Distance (ft.)	4.10	0.00	10.31	20.62	30.94	41.25	51.56	61.87	72.19	82.50	92.81	103.12	5.93	0.00	7.84	15.67	23.50	31.34	6.41	39.17	47.00	54.84	62.67
	Camber Ordinate (in.)		0.00	0.53	1.04	1.48	1.77	1.89	1.81	1.55	1.09	0.54	0.00		0.00	-0.42	-0.74	-0.96	-1.06		-0.96	-0.73	-0.41	0.00
③	Distance (ft.)	4.07	0.00	10.17	20.34	30.51	40.69	50.86	61.03	71.20	81.37	91.54	101.71	5.89	0.00	7.75	15.50	23.25	31.00	6.37	38.75	46.50	54.25	62.00
	Camber Ordinate (in.)		0.00	0.53	1.04	1.48	1.75	1.86	1.78	1.51	1.06	0.53	0.00		0.00	-0.42	-0.74	-0.96	-1.05		-0.95	-0.72	-0.41	0.00
④	Distance (ft.)	4.04	0.00	10.06	20.11	30.17	40.22	50.28	60.33	70.39	80.44	90.49	100.55	5.85	0.00	7.66	15.33	23.00	30.66	6.33	38.33	46.00	53.66	61.33
	Camber Ordinate (in.)		0.00	0.52	1.02	1.44	1.72	1.80	1.74	1.47	1.04	0.53	0.00		0.00	-0.41	-0.71	-0.92	-1.03		-0.91	-0.70	-0.39	0.00
⑤	Distance (ft.)	3.99	0.00	9.93	19.86	29.79	39.72	49.64	59.57	69.50	79.43	89.36	99.29	5.80	0.00	7.54	15.09	22.63	30.17	6.29	37.71	45.25	52.79	60.34
	Camber Ordinate (in.)		0.00	0.50	0.96	1.35	1.60	1.60	1.61	1.38	0.97	0.48	0.00		0.00	-0.38	-0.66	-0.85	-0.94		-0.84	-0.65	-0.36	0.00
⑥	Distance (ft.)	3.95	0.00	9.81	19.63	29.44	39.25	49.06	58.88	68.69	78.50	88.32	98.13	5.76	0.00	7.46	14.92	22.38	29.83	6.25	37.29	44.75	52.21	59.67
	Camber Ordinate (in.)		0.00	0.45	0.89	1.24	1.47	1.55	1.47	1.25	0.88	0.44	0.00		0.00	-0.36	-0.61	-0.79	-0.88		-0.79	-0.61	-0.35	0.00

GIRDER NUMBER		H (ft.)	Splice #5										Splice #6	J (ft.)	Splice #6						℄ Brg. Pier 12S	K (ft.)				Splice #7
①	Distance (ft.)	7.09	0.00	10.42	20.83	31.24	41.65	52.06	62.48	72.89	83.30	93.71	104.12	8.88	0.00	8.17	16.34	24.50	32.67	40.84	49.00	9.62	58.44	67.88	77.32	86.75
	Camber Ordinate (in.)		0.00	0.69	1.35	1.91	2.26	2.39	2.29	1.97	1.43	0.75	0.00		0.00	-0.70	-1.28	-1.76	-2.09	-2.27	-2.31		-2.00	-1.52	-0.85	0.00
②	Distance (ft.)	7.07	0.00	10.31	20.62	30.94	41.25	51.56	61.87	72.18	82.50	92.81	103.12	8.88	0.00	8.04	16.08	24.13	32.17	40.21	48.25	9.60	57.56	66.88	76.19	85.50
	Camber Ordinate (in.)		0.00	0.67	1.33	1.85	2.19	2.32	2.25	1.92	1.41	0.73	0.00		0.00	-0.67	-1.24	-1.70	-2.01	-2.20	-2.23		-1.94	-1.48	-0.81	0.00
③	Distance (ft.)	7.03	0.00	10.17	20.34	30.51	40.68	50.85	61.02	71.20	81.37	91.54	101.71	8.83	0.00	7.96	15.91	23.87	31.83	39.79	47.75	9.56	57.00	66.25	75.50	84.75
	Camber Ordinate (in.)		0.00	0.65	1.28	1.79	2.13	2.25	2.18	1.87	1.37	0.72	0.00		0.00	-0.64	-1.19	-1.64	-1.96	-2.13	-2.17		-1.89	-1.43	-0.79	0.00
④	Distance (ft.)	6.99	0.00	10.06	20.11	30.16	40.22	50.27	60.33	70.38	80.44	90.49	100.54	8.79	0.00	7.84	15.67	23.50	31.34	39.17	47.00	9.53	56.13	65.25	74.38	83.50
	Camber Ordinate (in.)		0.00	0.63	1.22	1.71	2.02	2.14	2.07	1.79	1.31	0.68	0.00		0.00	-0.62	-1.14	-1.56	-1.87	-2.04	-2.08		-1.82	-1.38	-0.76	0.00
⑤	Distance (ft.)	6.93	0.00	9.93	19.86	29.78	39.71	49.64	59.57	69.50	79.43	89.36	99.29	8.74	0.00	7.75	15.50	23.25	31.00	38.75	46.50	9.48	55.50	64.50	73.50	82.50
	Camber Ordinate (in.)		0.00	0.57	1.12	1.59	1.87	1.98	1.92	1.65	1.21	0.63	0.00		0.00	-0.57	-1.06	-1.45	-1.73	-1.90	-1.94		-1.70	-1.29	-0.72	0.00
⑥	Distance (ft.)	6.88	0.00	9.81	19.62	29.44	39.25	49.06	58.88	68.69	78.50	88.32	98.13	8.69	0.00	7.62	15.25	22.87	30.50	38.12	45.75	9.44	54.62	63.50	72.37	81.25
	Camber Ordinate (in.)		0.00	0.51	1.01	1.42	1.69	1.79	1.74	1.49	1.10	0.58	0.00		0.00	-0.52	-0.98	-1.34	-1.61	-1.76	-1.81		-1.57	-1.19	-0.64	0.00

GIRDER NUMBER		L (ft.)	Splice #7										Splice #8	M (ft.)	Splice #8				℄ Brg. Pier 13S	N (ft.)
①	Distance (ft.)	10.53	0.00	10.39	20.77	31.15	41.54	51.92	62.30	72.69	83.07	93.45	103.84	12.62	0.00	10.43	20.87	31.31	41.74	12.78
	Camber Ordinate (in.)		0.00	0.88	1.74	2.49	3.01	3.30	3.33	3.01	2.34	1.33	0.00		0.00	0.37	0.47	0.34	0.00	
②	Distance (ft.)	10.50	0.00	10.26	20.52	30.78	41.04	51.29	61.55	71.81	82.07	92.33	102.59	12.58	0.00	10.31	20.62	30.93	41.24	12.77
	Camber Ordinate (in.)		0.00	0.85	1.67	2.38	2.89	3.17	3.19	2.88	2.24	1.27	0.00		0.00	0.35	0.44	0.32	0.00	
③	Distance (ft.)	10.45	0.00	10.11	20.23	30.35	40.46	50.58	60.70	70.81	80.93	91.05	101.16	12.51	0.00	10.17	20.34	30.50	40.67	12.72
	Camber Ordinate (in.)		0.00	0.82	1.62	2.31	2.79	3.05	3.07	2.78	2.15	1.23	0.00		0.00	0.34	0.42	0.31	0.00	
④	Distance (ft.)	10.40	0.00	10.00	19.99	29.98	39.97	49.96	59.96	69.95	79.94	89.93	99.92	12.46	0.00	10.05	20.09	30.13	40.17	12.69
	Camber Ordinate (in.)		0.00	0.78	1.54	2.18	2.64	2.88	2.91	2.62	2.04	1.16	0.00		0.00	0.32	0.41	0.31	0.00	
⑤	Distance (ft.)	10.34	0.00	9.88	19.75	29.63	39.50	49.38	59.25	69.13	79.00	88.88	98.75	12.38	0.00	9.90	19.80	29.69	39.59	12.64
	Camber Ordinate (in.)		0.00	0.72	1.44	2.04	2.47	2.69	2.71	2.46	1.92	1.10	0.00		0.00	0.31	0.38	0.28	0.00	
⑥	Distance (ft.)	10.28	0.00	9.75	19.50	29.25	39.00	48.75	58.50	68.25	78.00	87.75	97.50	12.30	0.00	9.77	19.54	29.32	39.09	12.60
	Camber Ordinate (in.)		0.00	0.67	1.31	1.88	2.27	2.48	2.50	2.27	1.76	1.00	0.00		0.00	0.28	0.35	0.27	0.00	

NOTES:

Camber ordinates are computed for all dead load deflections and for the curvature of the finished profile grade.

DESIGN-DETAILED	JAB	6-94
CHECKED	HCB	6-94
REVISION		
FIELD CHANGES		

PLANS

3-17-94
ca.s10s13-2

SOUTH APPROACH

STATE OF MAINE
DEPARTMENT OF TRANSPO

PORTLAND - S. PORTLA
OVER FORE RI
CUMBERLAND CO

CAMBER DET
GIRDERS 1-6 SPANS S

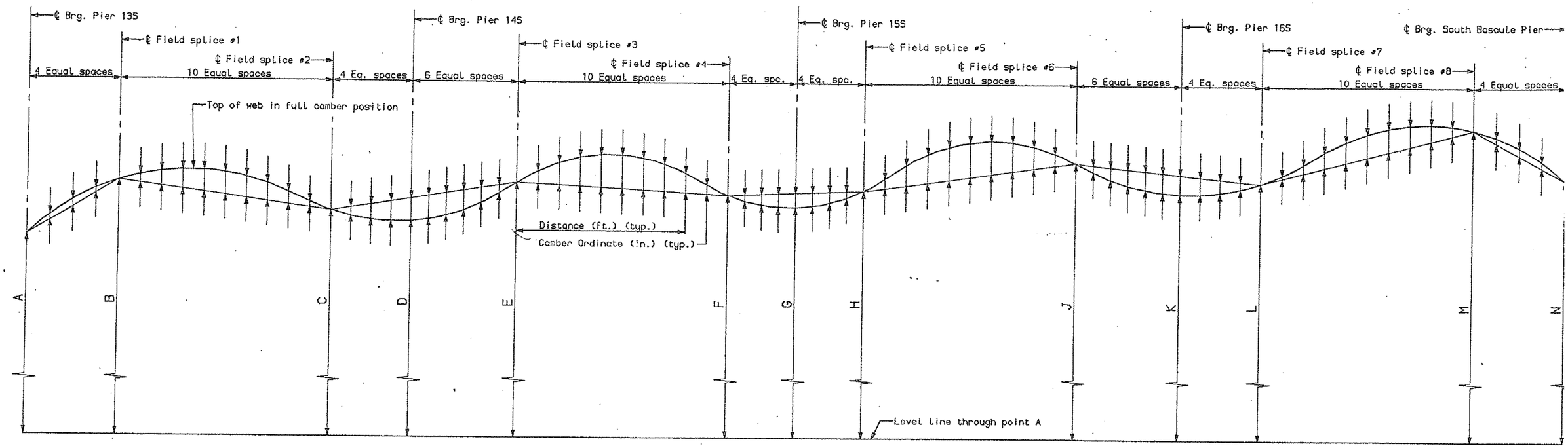

GIRDERS 1 - 7 TYPICAL

CHECKED	HCB	6-94
REVISION		6-94
FIELD CHANGES		

PLANS

3-17-94
cg.s14s17-1

SOUTH APPROACH S

STATE OF MAINE
DEPARTMENT OF TRANSPORT

PORTLAND - S. PORTLAN
OVER FORE RIVE
CUMBERLAND COU

CAMBER DETA
GIRDERS 1-7 SPANS S1

GIRDER NUMBER		℄ Brg. Pier 13S A (Ft.)					Splice #1	B (Ft.)	Splice #1										Splice #2
①	Distance (Ft.)	0.00	0.00	11.17	22.34	33.51	44.68	1.48	0.00	11.11	22.23	33.34	44.45	55.56	66.67	77.79	88.90	100.01	111.12
	Camber Ordinate (in.)		0.00	0.41	0.56	0.46	0.00		0.00	1.69	3.01	3.87	4.33	4.38	4.03	3.36	2.37	1.20	0.00
②	Distance (Ft.)	0.00	0.00	11.05	22.10	33.15	44.19	1.44	0.00	11.00	21.99	32.99	43.99	54.98	65.98	76.98	87.98	98.97	109.97
	Camber Ordinate (in.)		0.00	0.37	0.52	0.41	0.00		0.00	1.61	2.86	3.66	4.09	4.15	3.81	3.15	2.23	1.13	0.00
③	Distance (Ft.)	0.00	0.00	10.93	21.85	32.78	43.71	1.40	0.00	10.88	21.76	32.64	43.52	54.40	65.28	76.16	87.04	97.93	108.81
	Camber Ordinate (in.)		0.00	0.36	0.49	0.40	0.00		0.00	1.52	2.70	3.48	3.88	3.94	3.41	2.99	2.12	1.08	0.00
④	Distance (Ft.)	0.00	0.00	10.82	21.64	32.45	43.27	1.37	0.00	10.77	21.55	32.33	43.10	53.88	64.65	75.43	86.20	96.98	107.75
	Camber Ordinate (in.)		0.00	0.34	0.47	0.37	0.00		0.00	1.44	2.55	3.28	3.67	3.73	3.41	2.83	2.00	1.01	0.00
⑤	Distance (Ft.)	0.00	0.00	10.71	21.41	32.12	42.83	1.33	0.00	10.67	21.34	32.01	42.68	53.35	64.02	74.69	85.36	96.03	106.69
	Camber Ordinate (in.)		0.00	0.32	0.44	0.36	0.00		0.00	1.36	2.42	3.10	3.47	3.50	3.21	2.67	1.88	0.95	0.00
⑥	Distance (Ft.)	0.00	0.00	10.59	21.17	31.76	42.35	1.29	0.00	10.55	21.11	31.66	42.21	52.77	63.32	73.87	84.42	94.98	105.53
	Camber Ordinate (in.)		0.00	0.31	0.41	0.34	0.00		0.00	1.26	2.23	2.87	3.20	3.24	2.97	2.45	1.73	0.87	0.00
⑦	Distance (Ft.)	0.00	0.00	10.47	20.93	31.40	41.86	1.25	0.00	10.44	20.87	31.31	41.75	52.19	62.63	73.07	83.50	93.94	104.38
	Camber Ordinate (in.)		0.00	0.29	0.39	0.32	0.00		0.00	1.15	2.05	2.63	2.92	2.96	2.71	2.24	1.58	0.81	0.00

GIRDER NUMBER		C (Ft.)	Splice #2				℄ Brg. Pier 14S	D (Ft.)						Splice #3	E (Ft.)	Splice #3										Splice #4
①	Distance (Ft.)	3.05	0.00	10.04	20.07	30.10	40.13	3.38	48.88	57.62	66.37	75.12	83.86	92.61	4.29	0.00	11.11	22.22	33.34	44.45	55.56	66.67	77.79	88.90	100.01	111.12
	Camber Ordinate (in.)		0.00	-0.90	-1.64	-2.16	-2.48		-2.44	-2.25	-1.90	-1.39	-0.75	0.00		0.00	0.52	1.03	1.46	1.75	1.89	1.81	1.51	1.05	0.51	0.00
②	Distance (Ft.)	3.03	0.00	9.93	19.85	29.78	39.71	3.38	48.36	57.02	65.67	74.33	82.98	91.64	4.31	0.00	10.99	21.99	32.99	43.98	54.98	65.98	76.97	87.97	98.97	109.96
	Camber Ordinate (in.)		0.00	-0.88	-1.59	-2.09	-2.41		-2.38	-2.19	-1.84	-1.35	-0.73	0.00		0.00	0.51	1.01	1.43	1.70	1.83	1.74	1.46	1.03	0.51	0.00
③	Distance (Ft.)	3.00	0.00	9.82	19.64	29.46	39.29	3.38	47.85	56.41	64.98	73.54	82.10	90.67	4.32	0.00	10.88	21.76	32.64	43.52	54.40	65.28	76.16	87.04	97.92	108.80
	Camber Ordinate (in.)		0.00	-0.84	-1.51	-2.01	-2.31		-2.29	-2.10	-1.76	-1.28	-0.69	0.00		0.00	0.51	1.02	1.42	1.67	1.79	1.71	1.43	1.01	0.50	0.00
④	Distance (Ft.)	2.99	0.00	9.73	19.46	29.18	38.91	3.38	47.39	55.87	64.35	72.83	81.31	89.79	4.33	0.00	10.78	21.55	32.33	43.10	53.88	64.65	75.43	86.20	96.98	107.75
	Camber Ordinate (in.)		0.00	-0.81	-1.49	-1.96	-2.26		-2.22	-2.04	-1.71	-1.24	-0.67	0.00		0.00	0.50	1.00	1.39	1.65	1.75	1.68	1.41	0.99	0.49	0.00
⑤	Distance (Ft.)	2.97	0.00	9.64	19.27	28.90	38.53	3.38	46.93	55.33	63.72	72.12	80.52	88.92	4.33	0.00	10.67	21.34	32.00	42.67	53.34	64.01	74.68	85.35	96.02	106.69
	Camber Ordinate (in.)		0.00	-0.79	-1.43	-1.88	-2.14		-2.11	-1.95	-1.63	-1.18	-0.64	0.00		0.00	0.51	0.99	1.37	1.61	1.72	1.63	1.38	0.97	0.49	0.00
⑥	Distance (Ft.)	2.94	0.00	9.53	19.06	28.58	38.11	3.38	46.42	54.72	63.03	71.33	79.64	87.95	4.34	0.00	10.55	21.10	31.66	42.21	52.76	63.32	73.87	84.42	94.98	105.53
	Camber Ordinate (in.)		0.00	-0.74	-1.35	-1.77	-2.03		-2.00	-1.83	-1.54	-1.11	-0.60	0.00		0.00	0.49	0.96	1.34	1.57	1.67	1.59	1.34	0.95	0.48	0.00
⑦	Distance (Ft.)	2.92	0.00	9.42	18.84	28.27	37.69	3.38	45.90	54.12	62.33	70.55	78.76	86.98	4.34	0.00	10.43	20.87	31.31	41.75	52.18	62.62	73.06	83.49	93.93	104.37
	Camber Ordinate (in.)		0.00	-0.68	-1.24	-1.64	-1.89		-1.86	-1.69	-1.41	-1.02	-0.55	0.00		0.00	0.48	0.94	1.30	1.52	1.62	1.54	1.30	0.92	0.46	0.00

NOTES:

Camber ordinates are computed for all dead load deflections and for the curvature of the finished profile grade.

DESIGN-DETAILED	JAB	6-94
CHECKED	HCB	6-94
REVISION		
FIELD CHANGES		

PLANS

3-17-94
ca.s14s17-2

SOUTH APPROACH

STATE OF MAINE
DEPARTMENT OF TRANSPO

PORTLAND - S. PORTLA
OVER FORE RI
CUMBERLAND CO

CAMBER DET
GIRDERS 1-7 SPANS

SHEET 85 OF 182 AUGUSTA, MA

REV. NO.		
1	MAINE	DPI-90691

GIRDER NUMBER		F (Ft.)	Splice #4				℄ Brg. Pier 15S	G (Ft.)				Splice #5	H (Ft.)	Splice #5										Splice #6
①	Distance (ft.)	6.24	0.00	8.49	16.98	25.47	33.96	6.79	42.76	51.56	60.36	69.16	7.56	0.00	11.10	22.20	33.31	44.41	55.51	66.62	77.72	88.82	99.93	111.03
	Camber Ordinate (in.)		0.00	-0.47	-0.83	-1.06	-1.17		-1.02	-0.78	-0.44	0.00		0.00	0.90	1.73	2.45	2.95	3.18	3.15	2.87	2.30	1.41	0.00
②	Distance (ft.)	6.25	0.00	8.40	16.80	25.20	33.60	6.79	42.31	51.02	59.73	68.43	7.55	0.00	10.99	21.98	32.97	43.95	54.94	65.93	76.92	87.90	98.89	109.88
	Camber Ordinate (in.)		0.00	-0.45	-0.82	-1.04	-1.14		-1.00	-0.77	-0.43	0.00		0.00	0.84	1.63	2.30	2.75	2.97	2.93	2.69	2.15	1.32	0.00
③	Distance (ft.)	6.25	0.00	8.31	16.63	24.94	33.25	6.79	41.86	50.48	59.10	67.71	7.54	0.00	10.87	21.74	32.62	43.49	54.36	65.23	76.10	86.97	97.85	108.72
	Camber Ordinate (in.)		0.00	-0.44	-0.79	-1.01	-1.10		-0.97	-0.74	-0.40	0.00		0.00	0.77	1.50	2.09	2.51	2.67	2.62	2.35	1.84	1.05	0.00
④	Distance (ft.)	6.26	0.00	8.23	16.46	24.69	32.93	6.79	41.46	49.99	58.52	67.05	7.53	0.00	10.77	21.53	32.30	43.07	53.83	64.60	75.37	86.13	96.90	107.66
	Camber Ordinate (in.)		0.00	-0.43	-0.77	-0.98	-1.09		-0.95	-0.72	-0.39	0.00		0.00	0.71	1.38	1.92	2.29	2.43	2.36	2.10	1.57	0.82	0.00
⑤	Distance (ft.)	6.26	0.00	8.15	16.30	24.45	32.60	6.79	41.05	49.50	57.95	66.39	7.51	0.00	10.66	21.33	31.99	42.65	53.31	63.97	74.63	85.29	95.95	106.61
	Camber Ordinate (in.)		0.00	-0.42	-0.73	-0.95	-1.04		-0.91	-0.69	-0.39	0.00		0.00	0.66	1.27	1.78	2.11	2.24	2.17	1.93	1.43	0.75	0.00
⑥	Distance (ft.)	6.26	0.00	8.06	16.12	24.19	32.25	6.79	40.60	48.96	57.32	65.67	7.50	0.00	10.55	21.09	31.64	42.18	52.73	63.27	73.82	84.36	94.91	105.45
	Camber Ordinate (in.)		0.00	-0.38	-0.69	-0.88	-0.98		-0.86	-0.66	-0.36	0.00		0.00	0.60	1.16	1.63	1.93	2.07	2.00	1.77	1.33	0.67	0.00
⑦	Distance (ft.)	6.26	0.00	7.97	15.95	23.92	31.89	6.79	40.16	48.42	56.68	64.95	7.49	0.00	10.43	20.86	31.29	41.71	52.14	62.57	73.00	83.43	93.86	104.29
	Camber Ordinate (in.)		0.00	-0.36	-0.64	-0.83	-0.91		-0.80	-0.61	-0.34	0.00		0.00	0.55	1.07	1.48	1.76	1.88	1.82	1.62	1.21	0.61	0.00

GIRDER NUMBER		J (Ft.)	Splice #6						℄ Brg. Pier 16S	K (Ft.)				Splice #7
①	Distance (ft.)	9.42	0.00	8.56	17.11	25.66	34.22	42.77	51.33	9.77	60.66	70.00	79.33	88.67
	Camber Ordinate (in.)		0.00	-0.50	-0.95	-1.32	-1.60	-1.75	-1.79		-1.53	-1.16	-0.63	0.00
②	Distance (ft.)	9.41	0.00	8.46	16.93	25.39	33.86	42.33	50.79	9.79	60.03	69.27	78.50	87.74
	Camber Ordinate (in.)		0.00	-0.48	-0.92	-1.28	-1.56	-1.71	-1.74		-1.50	-1.13	-0.61	0.00
③	Distance (ft.)	9.42	0.00	8.37	16.75	25.13	33.50	41.88	50.25	9.95	59.39	68.53	77.67	86.81
	Camber Ordinate (in.)		0.00	-0.47	-0.91	-1.27	-1.52	-1.66	-1.69		-1.45	-1.11	-0.60	0.00
④	Distance (ft.)	9.42	0.00	8.30	16.59	24.88	33.17	41.46	49.76	10.07	58.80	67.85	76.90	85.95
	Camber Ordinate (in.)		0.00	-0.47	-0.90	-1.25	-1.50	-1.64	-1.67		-1.43	-1.09	-0.60	0.00
⑤	Distance (ft.)	9.41	0.00	8.21	16.42	24.63	32.84	41.04	49.25	10.12	58.21	67.16	76.11	85.07
	Camber Ordinate (in.)		0.00	-0.52	-0.98	-1.39	-1.71	-1.90	-1.87		-1.57	-1.16	-0.64	0.00
⑥	Distance (ft.)	9.40	0.00	8.12	16.24	24.36	32.48	40.60	48.71	10.14	57.57	66.43	75.28	84.14
	Camber Ordinate (in.)		0.00	-0.63	-1.22	-1.74	-2.19	-2.46	-2.32		-1.91	-1.38	-0.75	0.00
⑦	Distance (ft.)	9.38	0.00	8.03	16.06	24.09	32.12	40.15	48.18	10.17	56.94	65.69	74.45	83.21
	Camber Ordinate (in.)		0.00	-0.75	-1.44	-2.09	-2.65	-3.00	-2.78		-2.24	-1.58	-0.84	0.00

GIRDER NUMBER		L (Ft.)	Splice #7										Splice #8	M (Ft.)	Splice #8				℄ Brg. So. Bascule Pier	N (Ft.)
①	Distance (ft.)	10.28	0.00	10.72	21.43	32.15	42.86	53.58	64.30	75.01	85.73	96.44	107.16	11.21	0.00	9.93	19.85	29.78	39.70	10.96
	Camber Ordinate (in.)		0.00	0.95	1.85	2.66	3.21	3.51	3.46	3.03	2.27	1.28	0.00		0.00	0.32	0.36	0.18	0.00	
②	Distance (ft.)	10.32	0.00	10.68	21.35	32.02	42.70	53.37	64.04	74.71	85.39	96.06	106.73	11.25	0.00	9.93	19.86	29.78	39.71	10.94
	Camber Ordinate (in.)		0.00	1.01	1.97	2.82	3.41	3.75	3.74	3.36	2.63	1.51	0.00		0.00	0.29	0.30	0.12	0.00	
③	Distance (ft.)	10.57	0.00	10.63	21.27	31.90	42.53	53.16	63.79	74.42	85.05	95.68	106.31	11.79	0.00	9.92	19.85	29.77	39.70	11.58
	Camber Ordinate (in.)		0.00	1.01	1.97	2.82	3.42	3.75	3.75	3.36	2.63	1.50	0.00		0.00	0.32	0.37	0.21	0.00	
④	Distance (ft.)	10.79	0.00	10.58	21.17	31.76	42.35	52.94	63.52	74.11	84.70	95.29	105.88	12.29	0.00	9.92	19.85	29.77	39.70	12.17
	Camber Ordinate (in.)		0.00	1.00	1.94	2.78	3.39	3.72	3.71	3.33	2.61	1.49	0.00		0.00	0.35	0.44	0.32	0.00	
⑤	Distance (ft.)	10.90	0.00	10.54	21.09	31.64	42.18	52.73	63.27	73.82	84.36	94.91	105.45	12.54	0.00	9.93	19.86	29.78	39.71	12.42
	Camber Ordinate (in.)		0.00	1.05	2.03	2.89	3.50	3.84	3.83	3.45	2.73	1.63	0.00		0.00	0.35	0.45	0.32	0.00	
⑥	Distance (ft.)	11.02	0.00	10.50	21.01	31.51	42.01	52.51	63.02	73.52	84.02	94.53	105.03	12.91	0.00	9.92	19.85	29.78	39.70	12.79
	Camber Ordinate (in.)		0.00	1.09	2.09	2.95	3.59	3.94	3.95	3.62	2.95	1.87	0.00		0.00	0.35	0.44	0.31	0.00	
⑦	Distance (ft.)	11.15	0.00	10.46	20.92	31.38	41.84	52.30	62.76	73.22	83.68	94.14	104.60	13.28	0.00	9.93	19.85	29.78	39.70	13.17
	Camber Ordinate (in.)		0.00	1.14	2.15	3.04	3.69	4.06	4.11	3.81	3.17	2.11	0.00		0.00	0.36	0.44	0.33	0.00	

NOTES:

Camber ordinates are computed for all deflections and for the curvature of the profile grade.

DESIGN-DETAILED	JAB	6-94
CHECKED	MCB	6-94
REVISION		
FIELD CHANGES		

PLANS

3-17-94
ca.s14s17-3

SOUTH APPROACH

STATE OF MAINE
DEPARTMENT OF TRANSPO

PORTLAND - S. PORTLA
OVER FORE RI
CUMBERLAND CO

CAMBER DET
GIRDERS 1-7 SPANS S

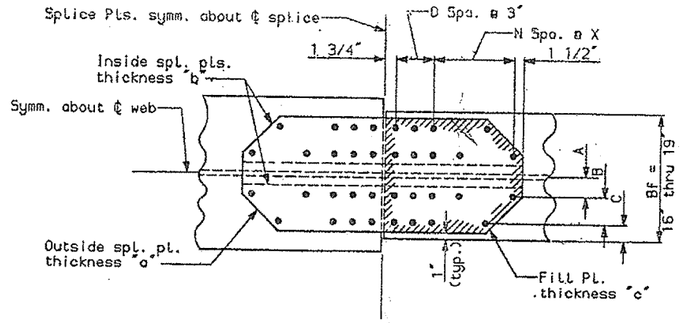

16" THRU 19" TOP FLANGES

TOP FLANGE SPLICE TABLE

SPANS	GIRDER NO.	SPLICE NO.	PLATES a	b	c	A	B	C	D	N	X	BF
Spans S1 thru S4	1	1	0.7500	1.0000	0.125	2.500	3.000	2.500	2	2	3.50	16.0
		2	0.6250	0.7500	0.375	2.500	3.000	2.500	2	1	3.50	16.0
		3	0.6250	0.7500	0.000	2.500	3.000	2.500	2	1	3.50	16.0
		4	0.6250	0.7500	0.250	2.500	3.000	2.500	2	1	3.50	16.0
		5	0.6250	0.7500	0.375	2.500	3.000	2.500	2	1	3.50	16.0
		6	0.7500	1.0000	0.125	2.500	3.000	2.500	2	2	3.50	16.0
	2	1	0.7500	1.0000	0.125	2.500	3.000	2.500	2	2	3.50	16.0
		2	0.6250	0.7500	0.375	2.500	3.000	2.500	2	1	3.50	16.0
		3	0.6250	0.7500	0.000	2.500	3.000	2.500	2	1	3.50	16.0
		4	0.6250	0.7500	0.000	2.500	3.000	2.500	2	1	3.50	16.0
		5	0.6250	0.7500	0.250	2.500	3.000	2.500	2	1	3.50	16.0
		6	0.7500	1.0000	0.000	2.500	3.000	2.500	2	2	3.50	16.0
	3	1	0.7500	1.0000	0.125	2.500	3.000	2.500	2	2	3.50	16.0
		2	0.6250	0.7500	0.375	2.500	3.000	2.500	2	1	3.50	16.0
		3	0.6250	0.7500	0.000	2.500	3.000	2.500	2	1	3.50	16.0
		4	0.6250	0.7500	0.000	2.500	3.000	2.500	2	1	3.50	16.0
		5	0.6250	0.7500	0.375	2.500	3.000	2.500	2	1	3.50	16.0
		6	0.7500	1.0000	0.125	2.500	3.000	2.500	2	2	3.50	16.0
	4	1	0.8750	1.1250	0.000	2.500	3.000	2.500	3	2	3.50	16.0
		2	0.6250	0.7500	0.375	2.500	3.000	2.500	2	1	3.50	16.0
		3	0.6250	0.7500	0.000	2.500	3.000	2.500	2	1	3.50	16.0
		4	0.6250	0.7500	0.125	2.500	3.000	2.500	2	1	3.50	16.0
		5	0.6250	0.7500	0.375	2.500	3.000	2.500	2	1	3.50	16.0
		6	0.7500	1.0000	0.125	2.500	3.000	2.500	2	2	3.50	16.0
	5	1	0.8750	1.1250	0.000	2.500	3.000	2.500	3	2	3.50	16.0
		2	0.6250	0.7500	0.375	2.500	3.000	2.500	2	1	3.50	16.0
		3	0.6250	0.7500	0.000	2.500	3.000	2.500	2	1	3.50	16.0
		4	0.6250	0.7500	0.125	2.500	3.000	2.500	2	1	3.50	16.0
		5	0.6250	0.7500	0.375	2.500	3.000	2.500	2	1	3.50	16.0
		6	0.7500	1.0000	0.125	2.500	3.000	2.500	2	2	3.50	16.0
	6	1	0.8750	1.2500	0.125	3.250	3.250	2.500	4	2	3.75	18.0
		2	0.6250	0.8750	0.250	3.250	3.250	2.500	3	1	3.75	18.0
		3	0.6250	0.8750	0.000	3.250	3.250	2.500	3	1	3.75	18.0
		4	0.6250	0.8750	0.000	3.250	3.250	2.500	3	1	3.75	18.0
		5	0.6250	0.8750	0.250	3.250	3.250	2.500	3	1	3.75	18.0
		6	0.8125	1.1250	0.000	3.250	3.250	2.500	3	2	3.75	18.0
	7	1	1.0000	1.2500	0.000	3.250	3.750	2.500	3	2	4.00	19.0
		2	0.6250	0.8750	0.500	3.250	3.750	2.500	3	1	4.00	19.0
		3	0.6250	0.8750	0.125	3.250	3.750	2.500	3	1	4.00	19.0
		4	0.6250	0.8750	0.375	3.250	3.750	2.500	3	1	4.00	19.0
		5	0.6250	0.8750	0.500	3.250	3.750	2.500	3	1	4.00	19.0
		6	0.8125	1.1250	0.250	3.250	3.750	2.500	3	2	4.00	19.0

SPANS	GIRDER NO.	SPLICE NO.	PLATES a	b	c	A	B	C	D	N	X	BF
Spans S5 thru S9	1	1	0.7500	1.0000	0.000	2.500	3.000	2.500	2	2	3.50	16.0
		2	0.6250	0.7500	0.250	2.500	3.000	2.500	2	1	3.50	16.0
		3	0.6250	0.7500	0.000	2.500	3.000	2.500	2	1	3.50	16.0
		4	0.6250	0.7500	0.000	2.500	3.000	2.500	2	1	3.50	16.0
		5	0.6250	0.7500	0.250	2.500	3.000	2.500	2	1	3.50	16.0
		6	0.6250	0.7500	0.250	2.500	3.000	2.500	2	1	3.50	16.0
		7	0.6250	0.7500	0.625	2.500	3.000	2.500	2	1	3.50	16.0
		8	0.8750	1.2500	0.125	3.250	3.250	2.500	4	2	3.75	18.0
		9	0.8750	1.2500	0.000	3.250	3.250	2.500	5	2	3.75	18.0
	2	1	0.7500	1.0000	0.000	2.500	3.000	2.500	2	2	3.50	16.0
		2	0.6250	0.7500	0.250	2.500	3.000	2.500	2	1	3.50	16.0
		3	0.6250	0.7500	0.000	2.500	3.000	2.500	2	1	3.50	16.0
		4	0.6250	0.7500	0.000	2.500	3.000	2.500	2	1	3.50	16.0
		5	0.6250	0.7500	0.250	2.500	3.000	2.500	2	1	3.50	16.0
		6	0.6250	0.7500	0.250	2.500	3.000	2.500	2	1	3.50	16.0
		7	0.6250	0.7500	0.625	2.500	3.000	2.500	2	1	3.50	16.0
		8	0.8750	1.1250	0.250	2.500	3.000	2.500	3	2	3.50	16.0
		9	0.7500	1.0000	0.125	2.500	3.000	2.500	3	2	3.50	16.0
	3	1	0.8750	1.1250	0.000	2.500	3.000	2.500	3	2	3.50	16.0
		2	0.6250	0.7500	0.375	2.500	3.000	2.500	2	1	3.50	16.0
		3	0.6250	0.7500	0.000	2.500	3.000	2.500	2	1	3.50	16.0
		4	0.6250	0.7500	0.000	2.500	3.000	2.500	2	1	3.50	16.0
		5	0.6250	0.7500	0.250	2.500	3.000	2.500	2	1	3.50	16.0
		6	0.6250	0.7500	0.250	2.500	3.000	2.500	2	1	3.50	16.0
		7	0.6250	0.7500	0.500	2.500	3.000	2.500	2	1	3.50	16.0
		8	0.8750	1.1250	0.125	2.500	3.000	2.500	3	2	3.50	16.0
		9	0.7500	1.0000	0.125	2.500	3.000	2.500	3	2	3.50	16.0
	4	1	0.8750	1.1250	0.000	2.500	3.000	2.500	3	2	3.50	16.0
		2	0.6250	0.7500	0.375	2.500	3.000	2.500	2	1	3.50	16.0
		3	0.6250	0.7500	0.125	2.500	3.000	2.500	2	1	3.50	16.0
		4	0.6250	0.7500	0.000	2.500	3.000	2.500	2	1	3.50	16.0
		5	0.6250	0.7500	0.250	2.500	3.000	2.500	2	1	3.50	16.0
		6	0.6250	0.7500	0.250	2.500	3.000	2.500	2	1	3.50	16.0
		7	0.6250	0.7500	0.500	2.500	3.000	2.500	2	1	3.50	16.0
		8	0.7500	1.0000	0.250	2.500	3.000	2.500	2	2	3.50	16.0
		9	0.7500	1.0000	0.000	2.500	3.000	2.500	3	2	3.50	16.0
	5	1	0.8125	1.1250	0.000	3.000	3.000	2.500	3	2	3.50	17.0
		2	0.6250	0.7500	0.375	2.500	3.000	2.500	2	1	3.50	16.0
		3	0.6250	0.7500	0.125	2.500	3.000	2.500	2	1	3.50	16.0
		4	0.6250	0.7500	0.000	2.500	3.000	2.500	2	1	3.50	16.0
		5	0.6250	0.7500	0.250	2.500	3.000	2.500	2	1	3.50	16.0
		6	0.6250	0.7500	0.375	2.500	3.000	2.500	2	1	3.50	16.0
		7	0.6250	0.7500	0.500	2.500	3.000	2.500	2	1	3.50	16.0
		8	0.7500	1.0000	0.250	2.500	3.000	2.500	2	2	3.50	16.0
		9	0.7500	1.0000	0.000	2.500	3.000	2.500	3	2	3.50	16.0
	6	1	1.0000	1.2500	0.000	3.000	3.000	2.500	4	2	3.50	17.0
		2	0.6250	0.7500	0.500	2.500	3.000	2.500	2	1	3.50	16.0
		3	0.6250	0.7500	0.375	2.500	3.000	2.500	2	1	3.50	16.0
		4	0.6875	0.8750	0.125	2.500	3.000	2.500	2	1	3.50	16.0
		5	0.6875	0.8750	0.375	2.500	3.000	2.500	2	1	3.50	16.0
		6	0.6250	0.7500	0.500	2.500	3.000	2.500	2	1	3.50	16.0
		7	0.6250	0.7500	0.625	2.500	3.000	2.500	2	1	3.50	16.0
		8	0.7500	1.0000	0.375	2.500	3.000	2.500	2	2	3.50	16.0
		9	0.7500	1.0000	0.000	2.500	3.000	2.500	3	2	3.50	16.0

FED. AID REG. NO.	STATE	PROJECT
1	MAINE	DPI-0056

DESIGN-DETAILED	RKB	SLH	6-94
CHECKED	PJB		6-94
REVISION			
FIELD CHANGES			

PLANS

4-11-94

sa. tflg.spl

SOUTH APPROACH S

STATE OF MAINE
DEPARTMENT OF TRANSPORT

PORTLAND - S. PORTLAN
OVER FORE RIVE
CUMBERLAND COU

TOP FLANGE FI
SPLICE DETAILS

SHEET 87 OF 182 AUGUSTA, MAIN

F.H.W.A. REG. NO.	STATE	PROJECT
1	MAINE	DPI-0066

TOP FLANGE SPLICE TABLE (CONTINUED)

SPANS	GIRDER NO.	SPLICE NO.	PLATES a	PLATES b	PLATES c	A	B	C	D	N	X	Bf
Spans S10 thru S13 *	1	1	0.8750	1.2500	0.125	3.250	3.250	2.500	5	2	3.75	18.0
		2	1.0000	1.3750	0.250	3.250	3.250	2.500	4	2	3.75	18.0
		3	0.6250	0.8750	0.750	3.250	3.250	2.500	3	1	3.75	18.0
		4	0.6250	0.8750	0.000	3.250	3.250	2.500	3	1	3.75	18.0
	2	1	0.8750	1.2500	0.000	3.250	3.250	2.500	5	2	3.75	18.0
		2	0.8750	1.2500	0.125	3.250	3.250	2.500	4	2	3.75	18.0
		3	0.6250	0.8750	0.500	3.250	3.250	2.500	3	1	3.75	18.0
		4	0.6250	0.8750	0.000	3.250	3.250	2.500	3	1	3.75	18.0
	3	1	0.8125	1.1250	0.000	3.000	3.000	2.500	4	2	3.50	17.0
		2	0.8125	1.1250	0.250	3.000	3.000	2.500	3	2	3.50	17.0
		3	0.5625	0.8125	0.625	3.000	3.000	2.500	2	1	3.50	17.0
		4	0.5625	0.8125	0.000	3.000	3.000	2.500	2	1	3.50	17.0
	4	1	0.7500	1.0000	0.000	2.500	3.000	2.500	3	2	3.50	16.0
		2	0.7500	1.0000	0.250	2.500	3.000	2.500	2	2	3.50	16.0
		3	0.6250	0.7500	0.500	2.500	3.000	2.500	2	1	3.50	16.0
		4	0.6250	0.7500	0.000	2.500	3.000	2.500	2	1	3.50	16.0
	5	1	0.7500	1.0000	0.000	2.500	3.000	2.500	3	2	3.50	16.0
		2	0.7500	1.0000	0.250	2.500	3.000	2.500	2	2	3.50	16.0
		3	0.6250	0.7500	0.500	2.500	3.000	2.500	2	1	3.50	16.0
		4	0.6250	0.7500	0.000	2.500	3.000	2.500	2	1	3.50	16.0
	6	1	0.7500	1.0000	0.000	2.500	3.000	2.500	3	2	3.50	16.0
		2	0.7500	1.0000	0.250	2.500	3.000	2.500	3	2	3.50	16.0
		3	0.6250	0.7500	0.500	2.500	3.000	2.500	2	1	3.50	16.0
		4	0.6250	0.7500	0.125	2.500	3.000	2.500	2	1	3.50	16.0
Spans S14 thru S17	1	1	0.8750	1.2500	0.125	3.250	3.250	2.500	5	2	3.75	18.0
		2	0.6250	0.8750	0.500	3.250	3.250	2.500	3	1	3.75	18.0
		3	0.6875	0.8750	0.500	2.500	3.000	2.500	3	1	3.50	16.0
		4	0.6875	0.8750	0.250	2.500	3.000	2.500	3	1	3.50	16.0
		5	0.6875	0.8750	0.250	2.500	3.000	2.500	2	1	3.50	16.0
		6	0.6875	0.8750	0.500	2.500	3.000	2.500	2	1	3.50	16.0
		7	0.6250	0.7500	0.625	2.500	3.000	2.500	3	1	3.50	16.0
		8	0.6250	0.7500	0.000	2.500	3.000	2.500	3	1	3.50	16.0
	2	1	0.8125	1.1250	0.000	3.000	3.000	2.500	4	2	3.50	17.0
		2	0.5625	0.8125	0.500	3.000	3.000	2.500	2	1	3.50	17.0
		3	0.6250	0.7500	0.500	2.500	3.000	2.500	2	1	3.50	16.0
		4	0.6250	0.7500	0.000	2.500	3.000	2.500	2	1	3.50	16.0
		5	0.6250	0.7500	0.000	2.500	3.000	2.500	2	1	3.50	16.0
		6	0.6250	0.7500	0.375	2.500	3.000	2.500	2	1	3.50	16.0
		7	0.6250	0.7500	0.375	2.500	3.000	2.500	2	1	3.50	16.0
		8	0.6250	0.7500	0.000	2.500	3.000	2.500	3	1	3.50	16.0
	3	1	0.7500	1.0000	0.125	2.500	3.000	2.500	3	2	3.50	16.0
		2	0.8750	1.1250	0.000	2.500	3.000	2.500	3	2	3.50	16.0
		3	0.6250	0.7500	0.375	2.500	3.000	2.500	2	1	3.50	16.0
		4	0.6250	0.7500	0.000	2.500	3.000	2.500	2	1	3.50	16.0
		5	0.6250	0.7500	0.000	2.500	3.000	2.500	2	1	3.50	16.0
		6	0.6250	0.7500	0.375	2.500	3.000	2.500	2	1	3.50	16.0
		7	0.6250	0.7500	0.375	2.500	3.000	2.500	2	1	3.50	16.0
		8	0.6250	0.7500	0.000	2.500	3.000	2.500	2	1	3.50	16.0
	4	1	0.7500	1.0000	0.000	2.500	3.000	2.500	3	2	3.50	16.0
		2	0.7500	1.0000	0.125	2.500	3.000	2.500	2	2	3.50	16.0
		3	0.6250	0.7500	0.375	2.500	3.000	2.500	2	1	3.50	16.0
		4	0.6250	0.7500	0.000	2.500	3.000	2.500	2	1	3.50	16.0
		5	0.6250	0.7500	0.000	2.500	3.000	2.500	2	1	3.50	16.0
		6	0.6250	0.7500	0.250	2.500	3.000	2.500	2	1	3.50	16.0
		7	0.6250	0.7500	0.250	2.500	3.000	2.500	2	1	3.50	16.0
		8	0.6250	0.7500	0.000	2.500	3.000	2.500	2	1	3.50	16.0
	5	1	0.7500	1.0000	0.000	2.500	3.000	2.500	3	2	3.50	16.0
		2	0.7500	1.0000	0.125	2.500	3.000	2.500	2	2	3.50	16.0
		3	0.6250	0.7500	0.375	2.500	3.000	2.500	2	1	3.50	16.0
		4	0.6250	0.7500	0.000	2.500	3.000	2.500	2	1	3.50	16.0
		5	0.6250	0.7500	0.000	2.500	3.000	2.500	2	1	3.50	16.0
		6	0.6250	0.7500	0.250	2.500	3.000	2.500	2	1	3.50	16.0
		7	0.6250	0.7500	0.250	2.500	3.000	2.500	2	1	3.50	16.0
		8	0.6250	0.7500	0.000	2.500	3.000	2.500	2	1	3.50	16.0
	6	1	0.7500	1.0000	0.000	2.500	3.000	2.500	3	2	3.50	16.0
		2	0.7500	1.0000	0.125	2.500	3.000	2.500	2	2	3.50	16.0
		3	0.6250	0.7500	0.375	2.500	3.000	2.500	2	1	3.50	16.0
		4	0.6250	0.7500	0.000	2.500	3.000	2.500	2	1	3.50	16.0
		5	0.6250	0.7500	0.000	2.500	3.000	2.500	2	1	3.50	16.0
		6	0.6250	0.7500	0.375	2.500	3.000	2.500	2	1	3.50	16.0
		7	0.6250	0.7500	0.375	2.500	3.000	2.500	2	1	3.50	16.0
		8	0.6250	0.7500	0.000	2.500	3.000	2.500	2	1	3.50	16.0
Spans S14 thru S17	7	1	0.7500	1.0000	0.000	2.500	3.000	2.500	3	2	3.50	16.0
		2	0.7500	1.0000	0.250	2.500	3.000	2.500	2	2	3.50	16.0
		3	0.6250	0.7500	0.500	2.500	3.000	2.500	2	1	3.50	16.0
		4	0.6250	0.7500	0.125	2.500	3.000	2.500	2	1	3.50	16.0
		5	0.6250	0.7500	0.125	2.500	3.000	2.500	2	1	3.50	16.0
		6	0.6250	0.7500	0.500	2.500	3.000	2.500	2	1	3.50	16.0
		7	0.6250	0.7500	0.500	2.500	3.000	2.500	2	1	3.50	16.0
		8	0.6250	0.7500	0.000	2.500	3.000	2.500	3	1	3.50	16.0

* Spans S10 thru S13 have a total of eight (8) splices per girder, symmetrical about pier 115

CHECKED	PDB	6-94
REVISION		
FIELD CHANGES		

PLANS

sa.tflg.spl.2

SOUTH APPROACH S

STATE OF MAINE
DEPARTMENT OF TRANSPORT

PORTLAND - S. PORTLAN
OVER FORE RIVE
CUMBERLAND COU

TOP FLANGE FI
SPLICE DETAILS

SHEET 88 OF 182 AUGUSTA, MAINE

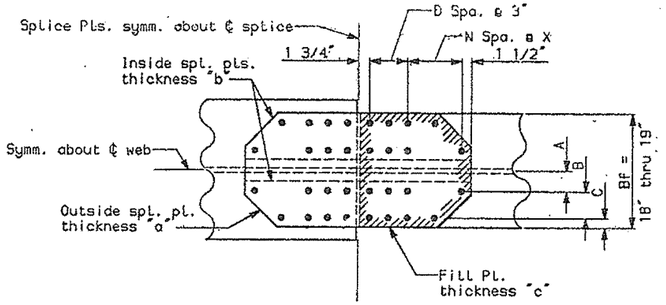

18" THRU 19" BOTTOM FLANGES

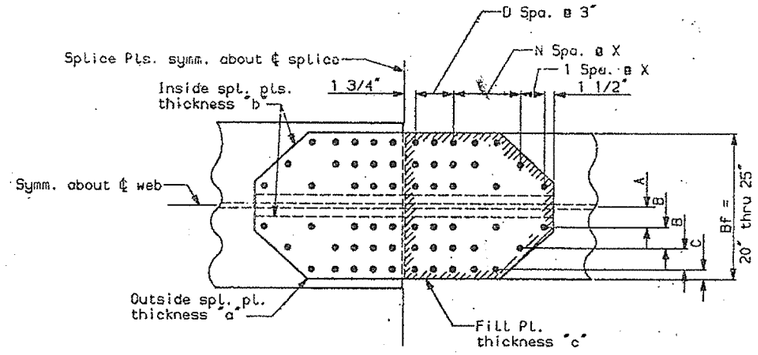

20" THRU 25" BOTTOM FLANGES

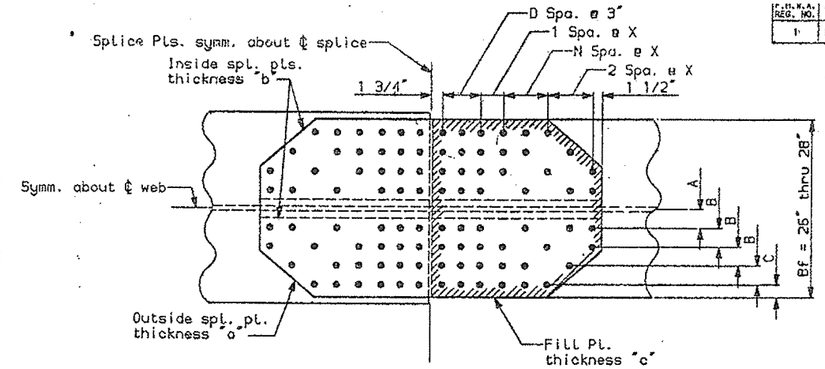

26" THRU 28" BOTTOM FLANGES

F.H.W.A. REG. NO.	STATE	PROJECT
1	MAINE	DPI-0068

BOTTOM FLANGE SPLICE TABLE

SPANS	GIRDER NO.	SPLICE NO.	PLATES a	b	c	A	B	C	D	N	X	Bf
Spans S1 thru S4	1	1	1.0000	1.1250	0.250	2.500	3.000	1.500	3	2	3.50	20.0
		2	0.6875	1.0000	0.500	3.250	4.250	1.500	4	1	3.00	18.0
		3	0.6875	1.0000	0.250	3.250	4.250	1.500	4	1	3.00	18.0
		4	0.6875	1.0000	0.250	3.250	4.250	1.500	4	1	3.00	18.0
		5	0.6875	1.0000	0.500	3.250	4.250	1.500	4	1	3.00	18.0
		6	1.0000	1.1250	0.250	3.000	3.000	1.500	3	2	3.50	21.0
	2	1	1.0000	1.1250	0.250	2.500	3.000	1.500	3	2	3.50	20.0
		2	0.6875	1.0000	0.500	3.250	4.250	1.500	4	1	3.00	18.0
		3	0.6875	1.0000	0.125	3.250	4.250	1.500	4	1	3.00	18.0
		4	0.6875	1.0000	0.125	3.250	4.250	1.500	4	1	3.00	18.0
		5	0.6875	1.0000	0.500	3.250	4.250	1.500	4	1	3.00	18.0
		6	1.0000	1.1250	0.250	2.500	3.000	1.500	3	2	3.50	20.0
	3	1	1.0000	1.1250	0.250	2.500	3.000	1.500	3	2	3.50	20.0
		2	0.6875	1.0000	0.500	3.250	4.250	1.500	4	1	3.00	18.0
		3	0.6875	1.0000	0.125	3.250	4.250	1.500	4	1	3.00	18.0
		4	0.6875	1.0000	0.125	3.250	4.250	1.500	4	1	3.00	18.0
		5	0.6875	1.0000	0.500	3.250	4.250	1.500	4	1	3.00	18.0
		6	1.0000	1.1250	0.250	2.500	3.000	1.500	3	2	3.50	20.0
	4	1	1.0000	1.1250	0.250	2.500	3.000	1.500	3	2	3.50	20.0
		2	0.6875	1.0000	0.500	3.250	4.250	1.500	4	1	3.00	18.0
		3	0.6875	1.0000	0.125	3.250	4.250	1.500	4	1	3.00	18.0
		4	0.6875	1.0000	0.125	3.250	4.250	1.500	4	1	3.00	18.0
		5	0.6875	1.0000	0.500	3.250	4.250	1.500	4	1	3.00	18.0
		6	1.0000	1.1250	0.250	2.500	3.000	1.500	3	2	3.50	20.0
	5	1	0.8750	1.1250	0.250	3.000	3.000	1.500	3	2	3.50	21.0
		2	0.6875	1.0000	0.500	3.250	4.250	1.500	4	1	3.00	18.0
		3	0.6875	1.0000	0.125	3.250	4.250	1.500	4	1	3.00	18.0
		4	0.6875	1.0000	0.125	3.250	4.250	1.500	4	1	3.00	18.0
		5	0.6875	1.0000	0.500	3.250	4.250	1.500	4	1	3.00	18.0
		6	0.8750	1.1250	0.250	3.000	3.000	1.500	3	2	3.50	21.0
	6	1	1.0000	1.2500	0.000	3.250	3.375	1.500	5	2	3.00	23.0
		2	0.7500	1.0000	0.375	3.250	4.250	1.500	4	2	3.00	18.0
		3	0.7500	1.0000	0.125	3.250	4.250	1.500	4	2	3.00	18.0
		4	0.7500	1.0000	0.125	3.250	4.250	1.500	4	2	3.00	18.0
		5	0.7500	1.0000	0.375	3.250	4.250	1.500	4	2	3.00	18.0
		6	1.0000	1.2500	0.000	3.250	3.375	1.500	4	2	3.00	23.0
	7	1	1.1250	1.3750	0.000	3.250	3.875	1.500	5	2	3.00	25.0
		2	0.7500	1.0000	0.625	3.250	4.750	1.500	5	1	3.00	19.0
		3	0.7500	1.0000	0.375	3.250	4.750	1.500	5	1	3.00	19.0
		4	0.7500	1.0000	0.375	3.250	4.750	1.500	5	1	3.00	19.0
		5	0.7500	1.0000	0.625	3.250	4.750	1.500	5	1	3.00	19.0
		6	1.2500	1.3750	0.000	2.500	3.000	1.500	2	0	3.50	26.0

SPANS	GIRDER NO.	SPLICE NO.	PLATES a	b	c	A	B	C	D	N	X	Bf
Spans S5 thru S9	1	1	0.8750	1.1250	0.250	3.000	3.000	1.500	3	2	3.50	21.0
		2	0.6875	1.0000	0.500	3.250	4.250	1.500	4	1	3.00	18.0
		3	0.6875	1.0000	0.250	3.250	4.250	1.500	4	1	3.00	18.0
		4	0.6875	1.0000	0.250	3.250	4.250	1.500	4	1	3.00	18.0
		5	0.6875	1.0000	0.250	3.250	4.250	1.500	4	1	3.00	18.0
		6	0.6875	1.0000	0.250	3.250	4.250	1.500	4	1	3.00	18.0
		7	0.6875	1.0000	0.750	3.250	4.250	1.500	4	1	3.00	18.0
		8	1.0000	1.1250	0.500	2.500	3.000	1.500	2	0	3.50	26.0
		9	1.1250	1.2500	0.250	3.000	3.000	1.500	4	0	3.50	27.0
	2	1	0.8750	1.1250	0.250	3.000	3.000	1.500	3	2	3.50	21.0
		2	0.6875	1.0000	0.500	3.250	4.250	1.500	4	1	3.00	18.0
		3	0.6875	1.0000	0.250	3.250	4.250	1.500	4	1	3.00	18.0
		4	0.6875	1.0000	0.250	3.250	4.250	1.500	4	1	3.00	18.0
		5	0.6875	1.0000	0.250	3.250	4.250	1.500	4	1	3.00	18.0
		6	0.6875	1.0000	0.250	3.250	4.250	1.500	4	1	3.00	18.0
		7	0.6875	1.0000	0.750	3.250	4.250	1.500	4	1	3.00	18.0
		8	0.7500	0.8750	0.750	3.250	3.625	1.500	3	1	3.00	24.0
		9	1.0000	1.3750	0.250	3.250	3.125	1.500	5	2	3.00	22.0
	3	1	0.8750	1.1250	0.250	3.000	3.000	1.500	3	2	3.50	21.0
		2	0.6875	1.0000	0.500	3.250	4.250	1.500	4	1	3.00	18.0
		3	0.6875	1.0000	0.250	3.250	4.250	1.500	4	1	3.00	18.0
		4	0.6875	1.0000	0.250	3.250	4.250	1.500	4	1	3.00	18.0
		5	0.6875	1.0000	0.250	3.250	4.250	1.500	4	1	3.00	18.0
		6	0.6875	1.0000	0.250	3.250	4.250	1.500	4	1	3.00	18.0
		7	0.6875	1.0000	0.750	3.250	4.250	1.500	4	1	3.00	18.0
		8	0.7500	0.8750	0.750	3.250	3.625	1.500	3	1	3.00	24.0
		9	1.0000	1.3750	0.000	3.250	3.125	1.500	5	2	3.00	22.0
	4	1	0.8750	1.1250	0.250	3.000	3.000	1.500	3	2	3.50	21.0
		2	0.6875	1.0000	0.500	3.250	4.250	1.500	4	1	3.00	18.0
		3	0.6875	1.0000	0.250	3.250	4.250	1.500	4	1	3.00	18.0
		4	0.6875	1.0000	0.250	3.250	4.250	1.500	4	1	3.00	18.0
		5	0.6875	1.0000	0.250	3.250	4.250	1.500	4	1	3.00	18.0
		6	0.6875	1.0000	0.250	3.250	4.250	1.500	4	1	3.00	18.0
		7	0.6875	1.0000	0.750	3.250	4.250	1.500	4	1	3.00	18.0
		8	0.7500	0.8750	0.750	3.250	3.625	1.500	3	1	3.00	24.0
		9	0.8750	1.1250	0.250	3.250	3.125	1.500	4	2	3.00	22.0
	5	1	1.0000	1.2500	0.000	3.250	3.625	1.500	5	2	3.00	24.0
		2	0.6875	1.0000	0.500	3.250	4.250	1.500	4	1	3.00	18.0
		3	0.6875	1.0000	0.250	3.250	4.250	1.500	4	1	3.00	18.0
		4	0.6875	1.0000	0.250	3.250	4.250	1.500	4	1	3.00	18.0
		5	0.6875	1.0000	0.500	3.250	4.250	1.500	4	1	3.00	18.0
		6	0.6875	1.0000	0.250	3.250	4.250	1.500	4	1	3.00	18.0
		7	0.6875	1.0000	0.750	3.250	4.250	1.500	4	1	3.00	18.0
		8	0.7500	0.8750	0.750	3.250	3.625	1.500	3	1	3.00	24.0
		9	0.8750	1.1250	0.250	3.250	3.125	1.500	4	2	3.00	22.0
	6	1	1.1250	1.3750	0.000	3.250	3.625	1.500	6	2	3.00	24.0
		2	0.7500	1.0000	0.625	3.250	4.250	1.500	4	2	3.00	18.0
		3	0.7500	1.0000	0.375	3.250	4.250	1.500	4	2	3.00	18.0
		4	1.1250	1.2500	0.000	3.000	3.000	1.500	3	2	3.50	21.0
		5	1.1250	1.2500	0.000	3.000	3.000	1.500	3	2	3.50	21.0
		6	0.7500	1.0000	0.375	3.250	4.250	1.500	4	2	3.00	18.0
		7	0.7500	1.0000	0.625	3.250	4.250	1.500	4	2	3.00	18.0
		8	0.8750	1.1250	0.625	3.250	3.625	1.500	3	2	3.00	24.0
		9	1.0000	1.3750	0.250	3.250	3.125	1.500	5	2	3.00	22.0

21+2+1¾ = 24¾

24+3¾=27¾

24+3¾=27¾

21+0¾

21+0¾

27¾

DESIGN-DETAILED	HCB	SLH	6-94
CHECKED	PDB		6-94
REVISION			
FIELD CHANGES			

PLANS

4-13-94

sa.bflg.spl

SOUTH APPROACH

STATE OF MAINE
DEPARTMENT OF TRANSPOR

PORTLAND - S. PORTLA
OVER FORE RIV
CUMBERLAND CO

BOTTOM FLANGE
SPLICE DETAIL

BOTTOM FLANGE SPLICE TABLE (CONTINUED)

SPANS	GIRDER NO.	SPLICE NO.	PLATES a	PLATES b	PLATES c	A	B	C	D	N	X	Bf
Spans S10 thru S13*	1	1	1.0000	1.2500	0.250	3.250	3.625	1.500	6	2	3.00	24.0
		2	0.8750	1.0000	0.625	2.500	3.000	1.500	2	0	3.50	26.0
		3	0.6875	1.0000	0.750	3.250	4.250	1.500	5	1	3.00	18.0
		4	0.6875	1.0000	0.250	3.250	4.250	1.500	5	1	3.00	18.0
	2	1	1.0000	1.3750	0.250	3.250	3.125	1.500	5	2	3.00	22.0
		2	0.7500	0.8750	0.750	3.250	3.625	1.500	3	1	3.00	24.0
		3	0.6875	1.0000	0.750	3.250	4.250	1.500	5	1	3.00	18.0
		4	0.6875	1.0000	0.250	3.250	4.250	1.500	4	1	3.00	18.0
	3	1	0.8750	1.1250	0.250	3.250	3.125	1.500	4	2	3.00	22.0
		2	0.7500	1.0000	0.750	3.250	3.125	1.500	3	1	3.00	22.0
		3	0.6875	1.0000	0.750	3.250	4.250	1.500	4	1	3.00	18.0
		4	0.6875	1.0000	0.250	3.250	4.250	1.500	4	1	3.00	18.0
	4	1	0.8125	1.1250	0.250	3.250	4.250	1.500	6	2	3.00	18.0
		2	0.6875	0.8125	0.625	3.000	3.000	1.500	3	1	3.50	21.0
		3	0.6875	1.0000	0.500	3.250	4.250	1.500	4	1	3.00	18.0
		4	0.6875	1.0000	0.250	3.250	4.250	1.500	4	1	3.00	18.0
	5	1	0.8125	1.1250	0.250	3.250	4.250	1.500	6	2	3.00	18.0
		2	0.6875	0.8125	0.625	3.000	3.000	1.500	3	1	3.50	21.0
		3	0.6875	1.0000	0.500	3.250	4.250	1.500	4	1	3.00	18.0
		4	0.6875	1.0000	0.250	3.250	4.250	1.500	4	1	3.00	18.0
	6	1	0.8750	1.1250	0.250	3.250	3.125	1.500	4	2	3.00	22.0
		2	0.7500	1.0000	0.750	3.250	3.125	1.500	3	1	3.00	22.0
		3	0.6875	1.0000	0.750	3.250	4.250	1.500	5	1	3.00	18.0
		4	0.6875	1.0000	0.250	3.250	4.250	1.500	5	1	3.00	18.0
Spans S14 thru S17	1	1	1.0000	1.2500	0.250	3.250	3.625	1.500	6	2	3.00	24.0
		2	0.8125	1.0000	0.500	3.000	3.000	1.500	3	0	3.50	27.0
		3	0.7500	1.0000	0.625	3.250	4.250	1.500	5	2	3.00	18.0
		4	0.7500	1.0000	0.375	3.250	4.250	1.500	4	2	3.00	18.0
		5	0.7500	1.0000	0.125	3.250	4.250	1.500	4	2	3.00	18.0
		6	0.7500	1.0000	0.625	3.250	4.250	1.500	4	2	3.00	18.0
		7	0.7500	0.8750	0.625	3.000	3.000	1.500	3	2	3.50	21.0
		8	0.8125	1.1250	0.250	3.250	4.250	1.500	5	2	3.00	18.0
	2	1	0.8125	1.0000	0.250	3.000	3.000	1.500	4	2	3.50	21.0
		2	0.8125	1.0000	0.625	3.250	3.625	1.500	3	2	3.00	24.0
		3	0.6875	1.0000	0.750	3.250	4.250	1.500	5	1	3.00	18.0
		4	0.6875	1.0000	0.250	3.250	4.250	1.500	5	1	3.00	18.0
		5	0.6875	1.0000	0.125	3.250	4.250	1.500	4	1	3.00	18.0
		6	0.6875	1.0000	0.500	3.250	4.250	1.500	4	1	3.00	18.0
		7	0.6875	0.8125	0.500	3.000	3.000	1.500	3	2	3.50	21.0
		8	0.7500	1.0000	0.375	3.250	4.250	1.500	5	2	3.00	18.0
	3	1	0.8125	1.1250	0.250	3.250	4.250	1.500	6	2	3.00	18.0
		2	0.6875	0.8125	0.500	3.000	3.000	1.500	2	2	3.50	21.0
		3	0.6875	1.0000	0.500	3.250	4.250	1.500	4	1	3.00	18.0
		4	0.6875	1.0000	0 250	3.250	4.250	1.500	4	1	3.00	18.0
		5	0.6875	1.0000	0.125	3.250	4.250	1.500	4	1	3.00	18.0
		6	0.6875	1.0000	0.500	3.250	4.250	1.500	4	1	3.00	18.0
		7	0.6250	0.7500	0.625	3.000	3.000	1.500	3	1	3.50	21.0
		8	0.6250	0.8125	0.250	3.250	4.250	1.500	5	1	3.00	18.0
	4	1	0.7500	1.0000	0.125	3.250	4.250	1.500	5	2	3.00	18.0
		2	0.6250	0.7500	0.625	3.000	3.000	1.500	2	1	3.50	21.0
		3	0.6875	1.0000	0.500	3.250	4.250	1.500	4	1	3.00	18.0
		4	0.6875	1.0000	0.125	3.250	4.250	1.500	4	1	3.00	18.0
		5	0.6875	1.0000	0.125	3.250	4.250	1.500	4	1	3.00	18.0
		6	0.6875	1.0000	0.500	3.250	4.250	1.500	4	1	3.00	18.0
		7	0.6250	0.7500	0.625	3.000	3.000	1.500	3	1	3.50	21.0
		8	0.6250	0.8125	0.250	3.250	4.250	1.500	5	1	3.00	18.0
	5	1	0.7500	1.0000	0.125	3.250	4.250	1.500	5	2	3.00	18.0
		2	0.6250	0.7500	0.625	3.000	3.000	1.500	2	1	3.50	21.0
		3	0.6875	1.0000	0.500	3.250	4.250	1.500	4	1	3.00	18.0
		4	0.6875	1.0000	0.125	3.250	4.250	1.500	4	1	3.00	18.0
		5	0.6875	1.0000	0.125	3.250	4.250	1.500	4	1	3.00	18.0
		6	0.6875	1.0000	0.500	3.250	4.250	1.500	4	1	3.00	18.0
		7	0.6250	0.7500	0.625	3.000	3.000	1.500	3	1	3.50	21.0
		8	0.6250	0.8125	0.250	3.250	4.250	1.500	5	1	3.00	18.0
	6	1	0.7500	1.0000	0.125	3.250	4.250	1.500	5	2	3.00	18.0
		2	0.6250	0.7500	0.625	3.000	3.000	1.500	3	1	3.50	21.0
		3	0.6875	1.0000	0.500	3.250	4.250	1.500	4	1	3.00	18.0
		4	0.6875	1.0000	0.125	3.250	4.250	1.500	4	1	3.00	18.0
		5	0.6875	1.0000	0.125	3.250	4.250	1.500	4	1	3.00	18.0
		6	0.6875	1.0000	0.500	3.250	4.250	1.500	4	1	3.00	18.0
		7	0.6250	0.7500	0.625	3.000	3.000	1.500	3	1	3.50	21.0
		8	0.6875	1.0000	0.250	3.250	4.250	1.500	5	1	3.00	18.0

SPANS	GIRDER NO.	SPLICE NO.	PLATES a	PLATES b	PLATES c	A	B	C	D	N	X	Bf
Spans S14 thru S17	7	1	0.8125	1.1250	0.250	3.250	4.250	1.500	6	2	3.00	18.0
		2	0.7500	0.8750	0.625	3.000	3.000	1.500	3	2	3.50	21.0
		3	0.6875	1.0000	0.750	3.250	4.250	1.500	5	1	3.00	18.0
		4	0.6875	1.0000	0.250	3.250	4.250	1.500	5	1	3.00	18.0
		5	0.6875	1.0000	0.250	3.250	4.250	1.500	4	1	3.00	18.0
		6	0.6875	1.0000	0.500	3.250	4.250	1.500	5	1	3.00	18.0
		7	0.7500	0.8750	0.500	3.250	3.625	1.500	4	1	3.00	24.0
		8	0.8125	1.0000	0.250	3.250	3.125	1.500	4	2	3.00	22.0

* Spans S10 thru S13 have a total of eight (8) splices per girder, symmetrical about pier 115

DESIGN-DETAILED	HCB	SLH	6-94
CHECKED	PCB		6-94
REVISION			
FIELD CHANGES			

PLANS

sa.bflg.spl.2

SOUTH APPROACH

STATE OF MAINE
DEPARTMENT OF TRANSPO

PORTLAND - S. PORTLA
OVER FORE RI
CUMBERLAND CO

BOTTOM FLANG
SPLICE DETAI

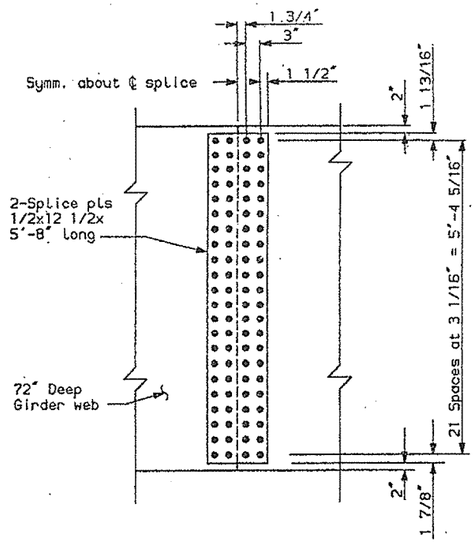

SPAN S1-S4

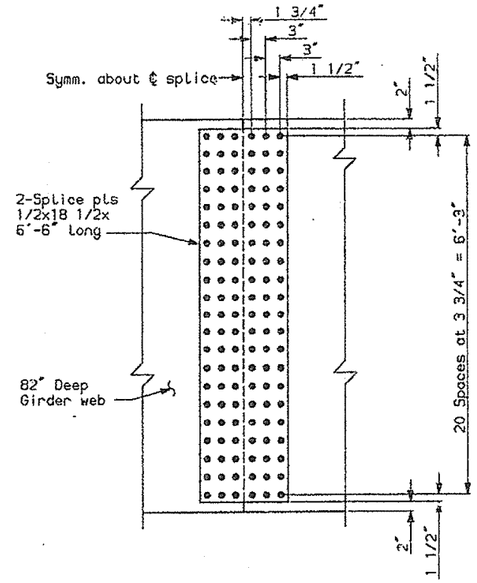

SPAN S10-S13

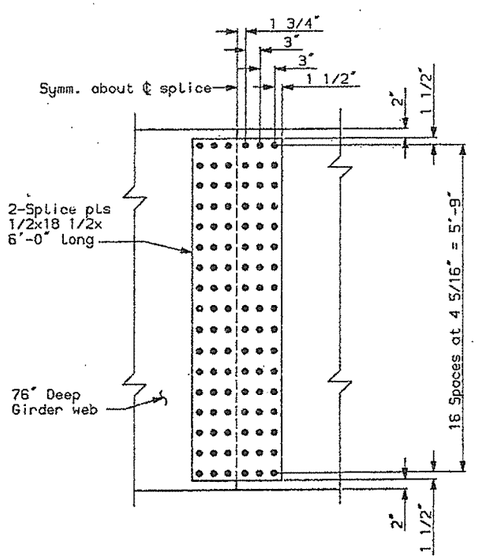

SPAN S5-S9

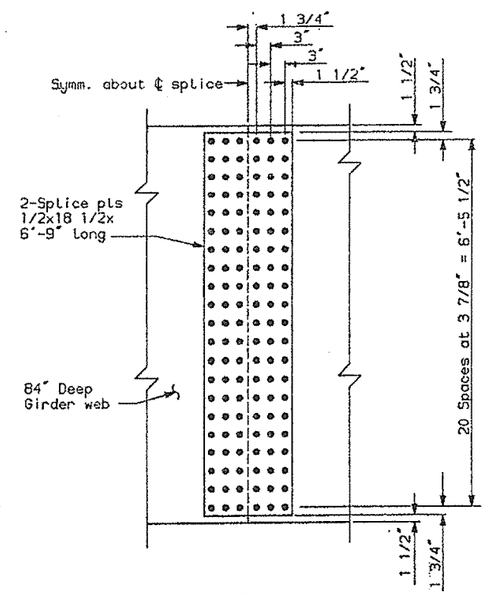

SPAN S14-S17

PROJECT DESIGN ENGINEER		BY	DATE
DESIGN-DETAILED	DWP	EAR	6-94
CHECKED		HCB	6-94
REVISION			
FIELD CHANGES			

PLANS

sa.web.spl

1	MAINE	DPI-00

SOUTH APPROAC

STATE OF MAI
DEPARTMENT OF TRANS

PORTLAND - S. PORTL
OVER FORE R
CUMBERLAND C

WEB FIELD S
DETAILS

SHEET 91 OF 182 AUGUSTA,

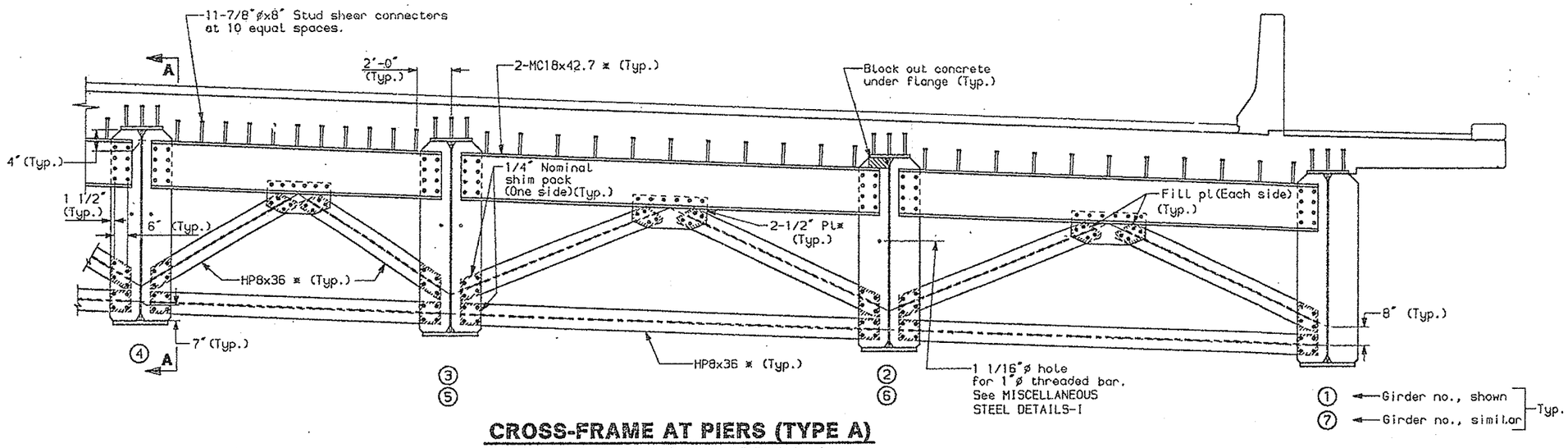

CROSS-FRAME AT PIERS (TYPE A)

(Spans S1-S4 shown, Spans S14-S17 similar)

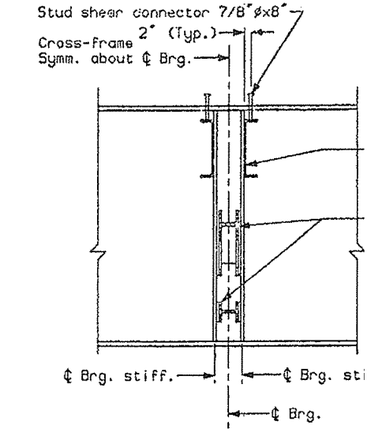

SECTION A-A

(Interior pier)

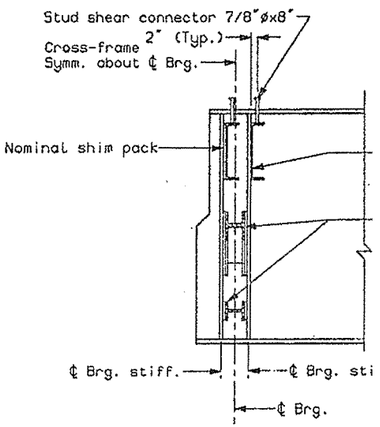

SECTION A-A

(Exterior pier)

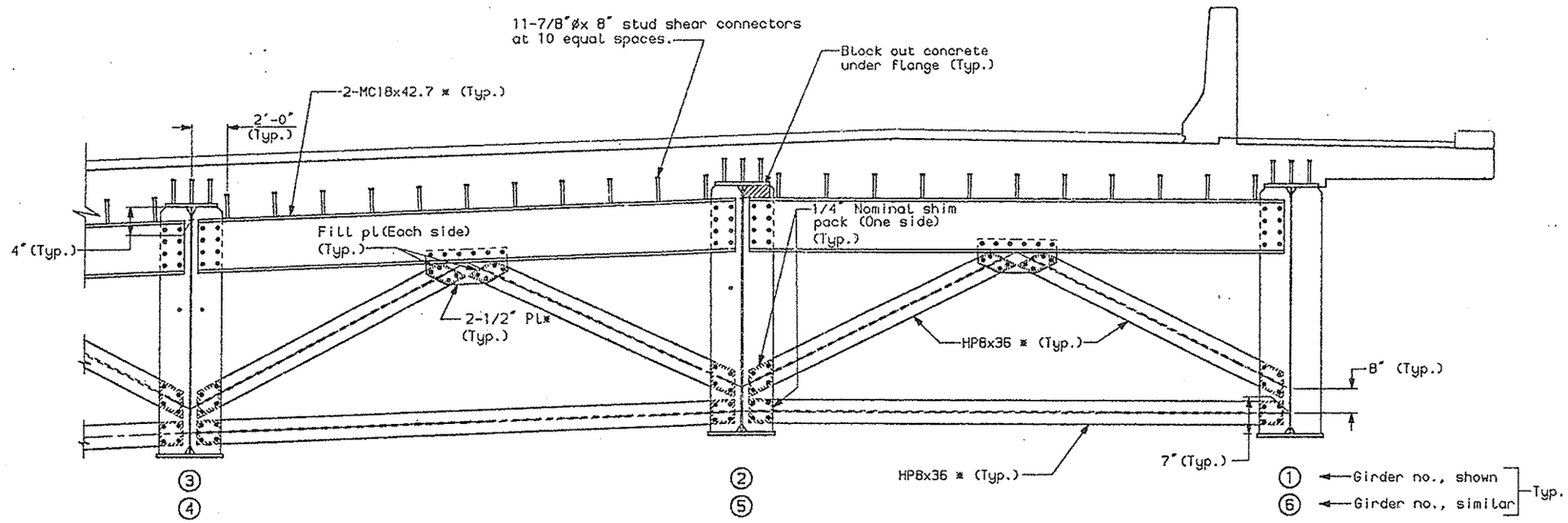

CROSS-FRAME AT PIERS (TYPE B)

(Spans S5-S9 shown, Spans S10-S13 similar)

NOTES:

*AASHTO M270(ASTM A709), Gr. 36

DESIGN-DETAILED	MCI	ELS	6-94
CHECKED		POB	6-94
REVISION			
FIELD CHANGES			

PLANS

ea.cframe.in

1	MAINE	DPI-C068(

SOUTH APPROACH

STATE OF MAINE
DEPARTMENT OF TRANSPOR

PORTLAND - S. PORTLA
OVER FORE RIV
CUMBERLAND CO

SOUTH APPRO
CROSS-FRAME DE

SHEET 92 OF 182 AUGUSTA, MA

F.H.W.A. REG. NO.	STATE	PROJECT
1	MAINE	BP1-00

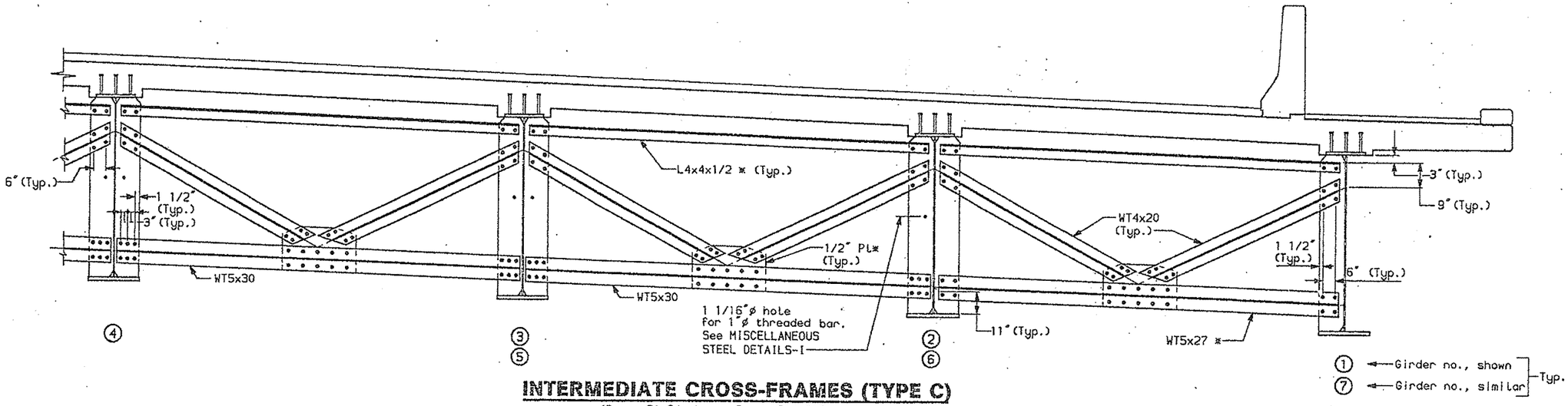

INTERMEDIATE CROSS-FRAMES (TYPE C)

(Spans S1-S4 shown; Spans S14-S17 similar)

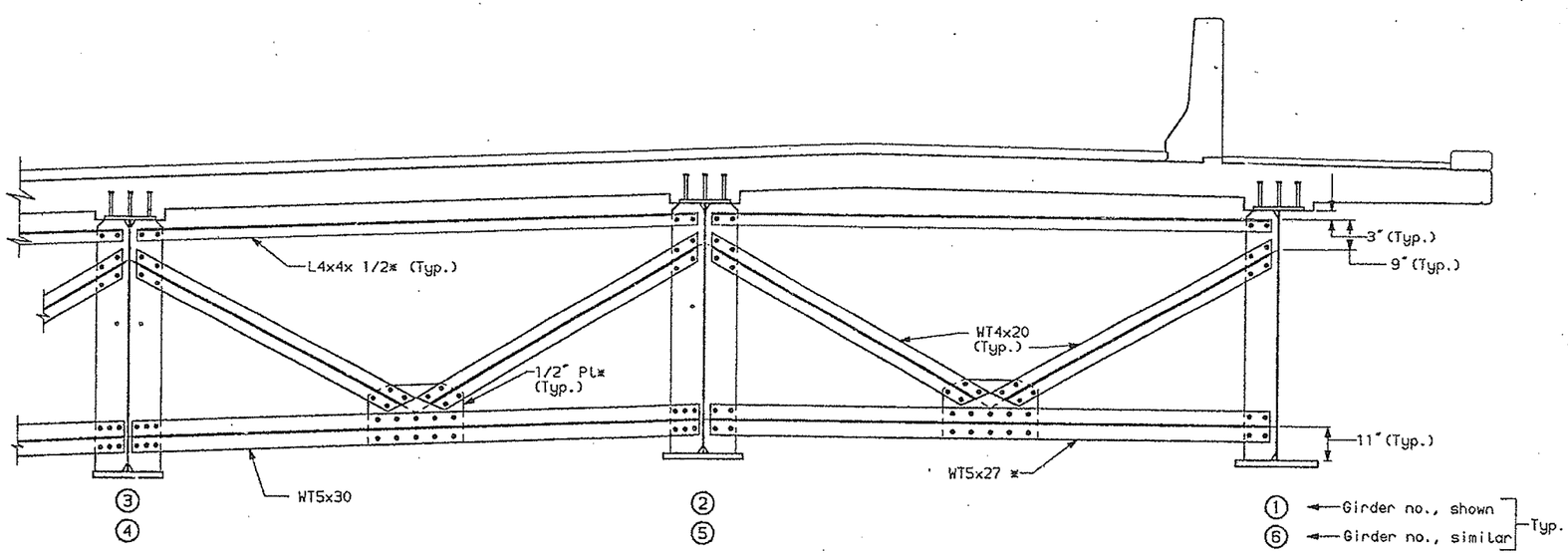

INTERMEDIATE CROSS-FRAMES (TYPE D)

(Spans S10-S13 shown; Spans S5-S9 similar)

NOTES:

*AASHTO M270 (ASTM A709), Gr. 36

DESIGN-DETAILED	MCI	ELS	6-94
CHECKED	POB		6-94
REVISION			
FIELD CHANGES			

PLANS

sd.cframe.4

SOUTH APPROACH

STATE OF MAINE
DEPARTMENT OF TRANSPO

PORTLAND - S. PORTLA
OVER FORE RI
CUMBERLAND CO

SOUTH APPRO
CROSS-FRAME DE

SHEET 93 OF 182 AUGUSTA, MA

F.H.W.A. REG. NO.	STATE	PRO
1	MAINE	OPI

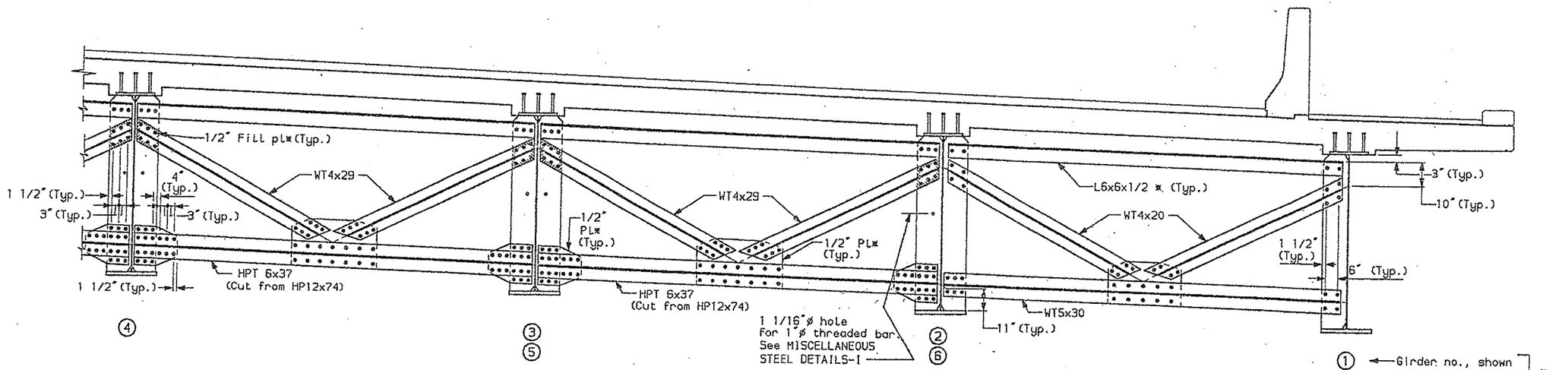

INTERMEDIATE CROSS-FRAMES (TYPE E)

(Typical spans S1-S4)

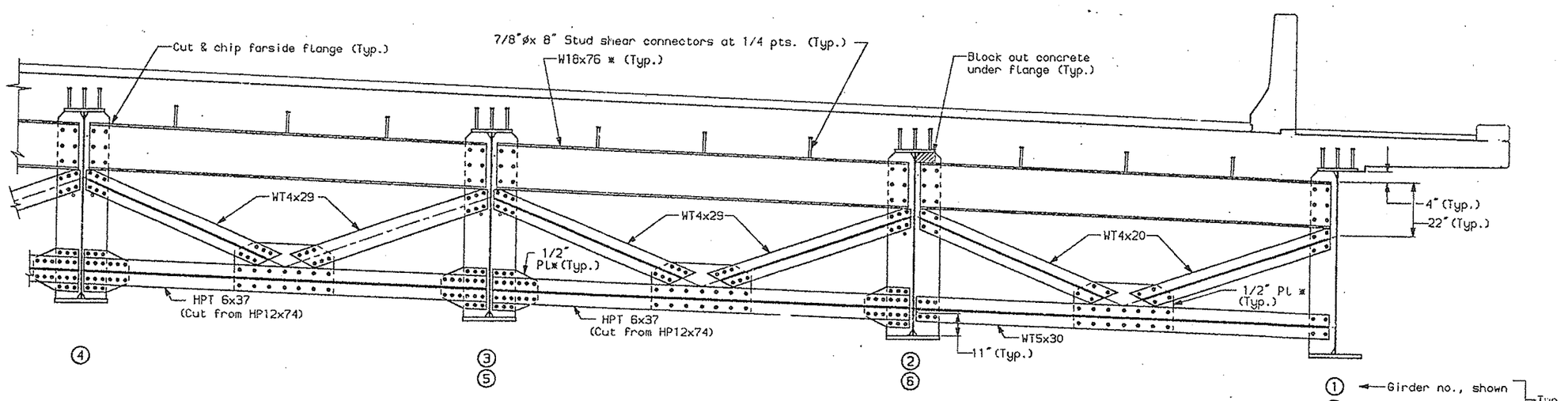

INTERMEDIATE CROSS-FRAMES (TYPE CF1)

(Typical spans S1-S4)

NOTES:

*AASHTO M270(ASTM A709), Gr. 36

PLANS			
DESIGN-DETAILED	MCI	ELS	6-94
CHECKED		PDB	6-94
REVISION			
FIELD CHANGES			

SOUTH APPROACH

STATE OF MAIN
DEPARTMENT OF TRANSP

PORTLAND - S. PORTL
OVER FORE R
CUMBERLAND C

SOUTH APPR
CROSS-FRAME DE

SHEET 94 OF 182 AUGUSTA, M

sa.cframe.2n

REV. NO.		
1	MAINE	DPI-0060(

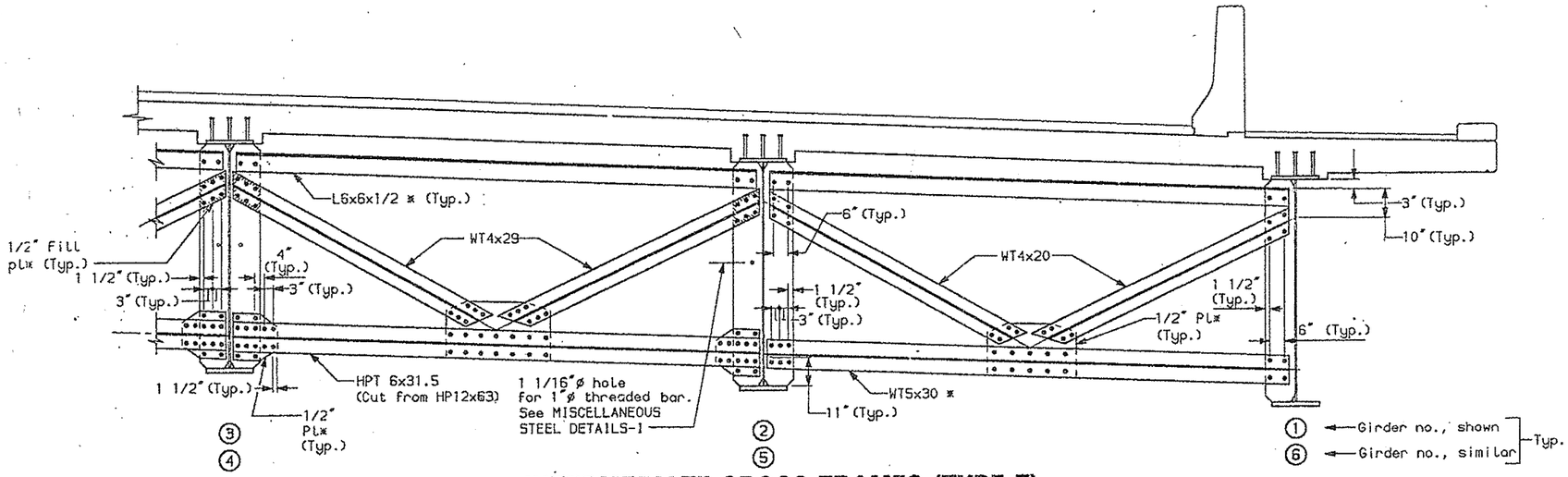

INTERMEDIATE CROSS-FRAMES (TYPE F)

(Typical spans S5-S9)

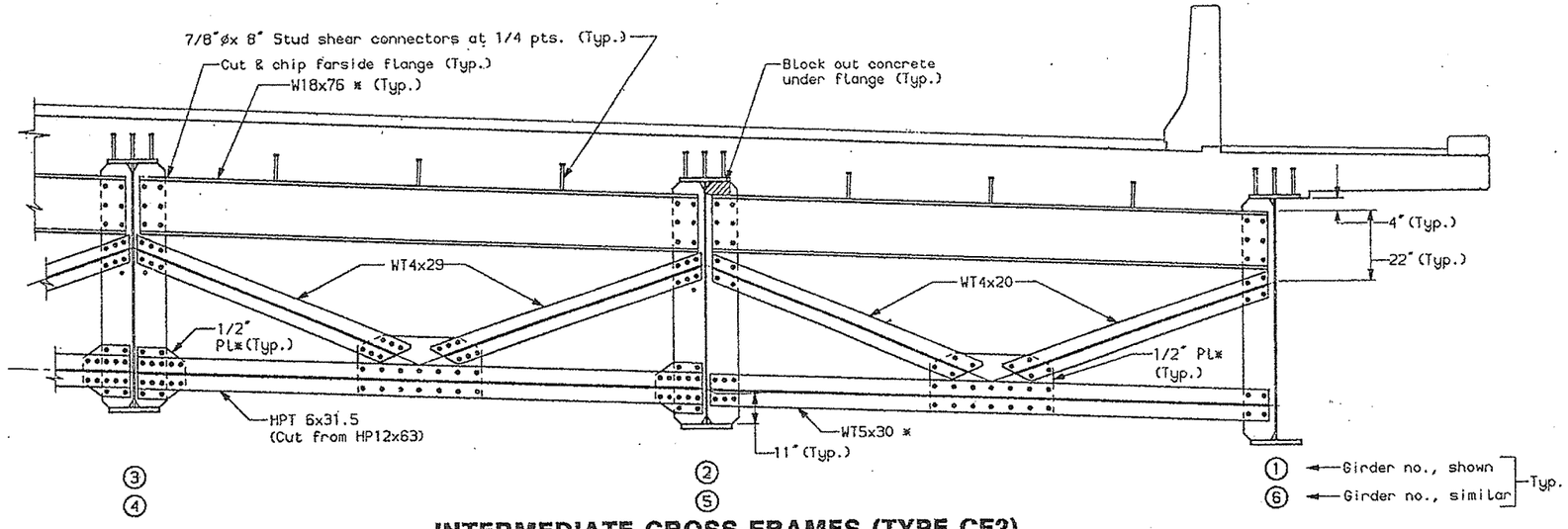

INTERMEDIATE CROSS-FRAMES (TYPE CF2)

(Typical spans S5-S9)

NOTES:

*AASHTO M270(ASTM A709), Gr. 36

DESIGN-DETAILED	MCI	ELS	6-94
CHECKED	POB		6-94
REVISION			
FIELD CHANGES			

PLANS

sa.cframe.7

SOUTH APPROACH

STATE OF MAINE
DEPARTMENT OF TRANSP

PORTLAND - S. PORTL
OVER FORE RI
CUMBERLAND C

SOUTH APPR
CROSS FRAME DE

SHEET 95 OF 182 AUGUSTA, M

F.H.W.A. REG. NO.	STATE	PROJEC
1	MAINE	OPI-0

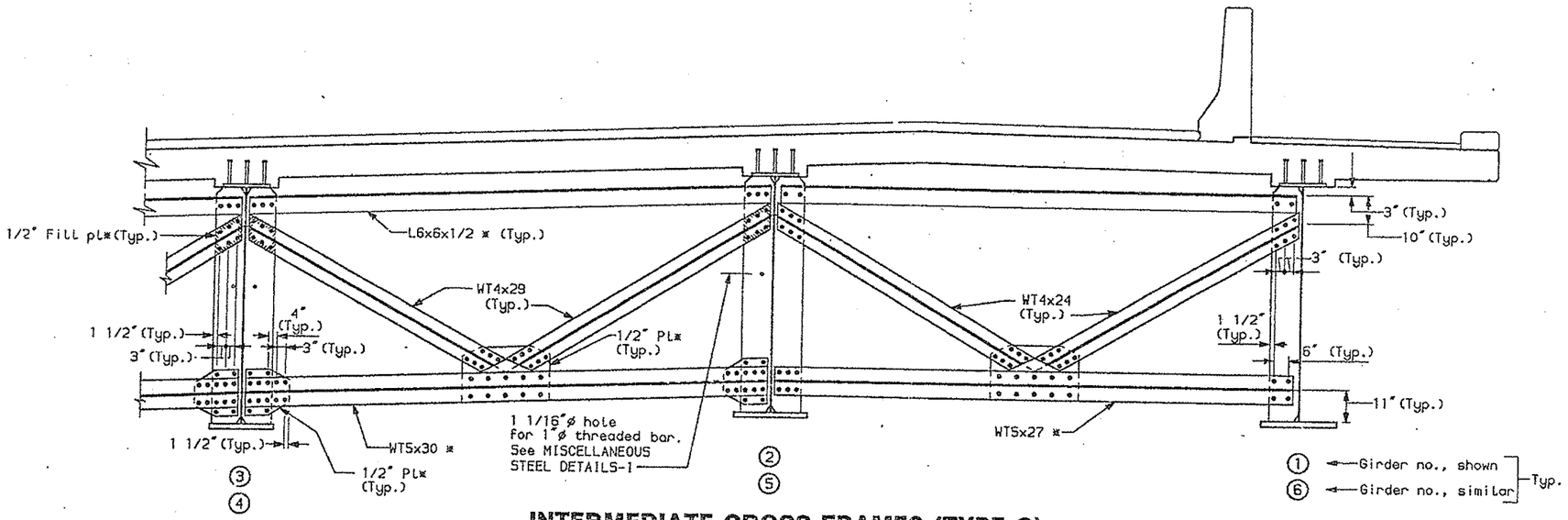

INTERMEDIATE CROSS-FRAMES (TYPE G)

(Typical spans S10-S13)

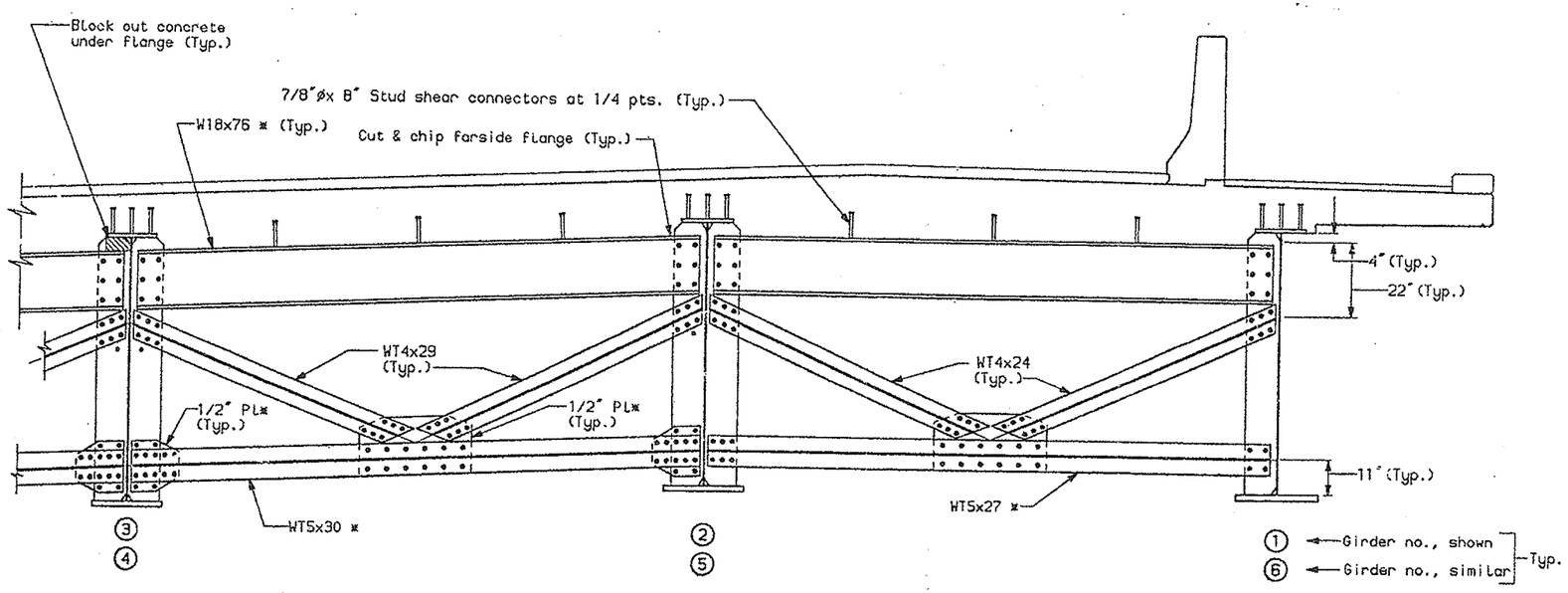

INTERMEDIATE CROSS-FRAMES (TYPE CF3)

(Typical spans S10-S13)

NOTES:

*AASHTO M270(ASTM A709), Gr. 36

PLANS			
DESIGN-DETAILED	MCI	ELS	6-94
CHECKED	PDB		6-94
REVISION			
FIELD CHANGES			

sa.cframe.3.n

SOUTH APPROACH

STATE OF MAINE
DEPARTMENT OF TRANSPO

PORTLAND - S. PORTLA
OVER FORE RIV
CUMBERLAND CO

SOUTH APPRO
CROSS-FRAME DE

SHEET 96 OF 182 AUGUSTA, MAI

REG. NO.	STATE	PROJECT
1	MAINE	DPI-0069

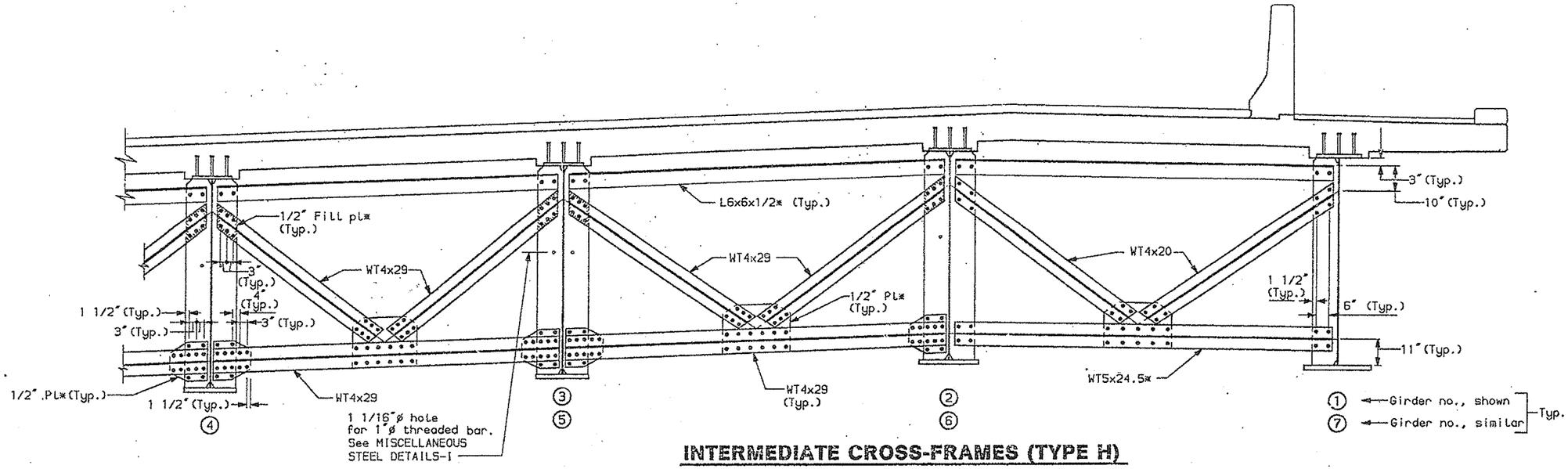

INTERMEDIATE CROSS-FRAMES (TYPE H)

(Typical spans S14-S17)

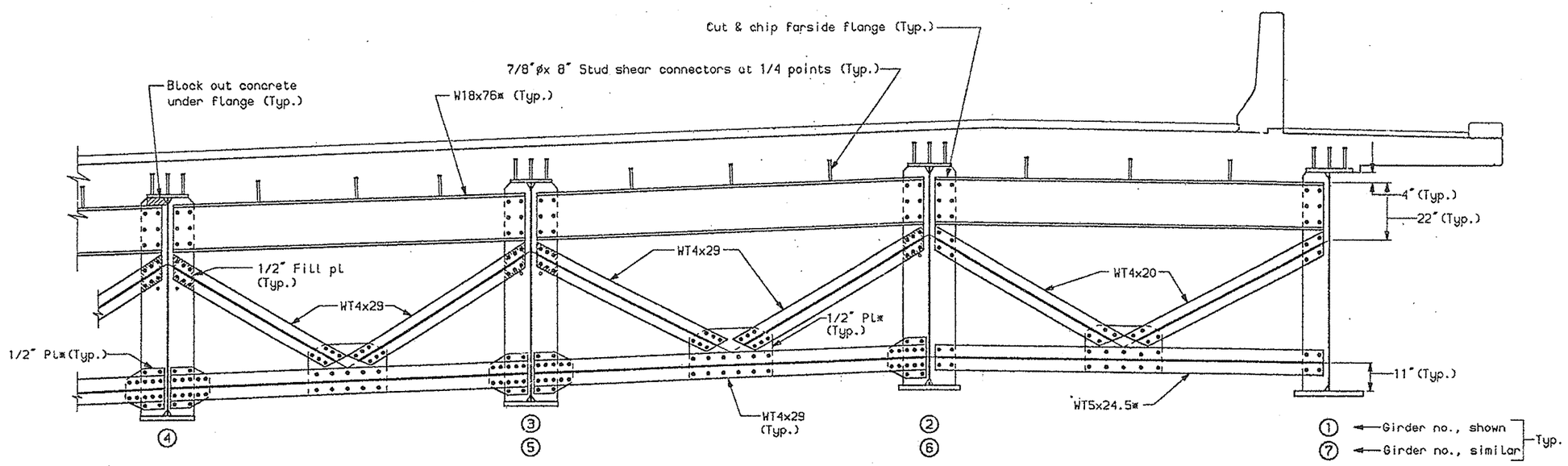

INTERMEDIATE CROSS-FRAMES (TYPE CF4)

(Typical spans S14-S17)

NOTES:

*AASHTO M270 (ASTM A709), Gr. 36

DESIGN-DETAILED	MCI	ELS	5-94
CHECKED	PDB		6-94
REVISION			
FIELD CHANGES			

PLANS

SOUTH APPROACH

STATE OF MAINE
DEPARTMENT OF TRANSPO

PORTLAND - S. PORTLA
OVER FORE RI
CUMBERLAND CO

SOUTH APPRO
CROSS-FRAME DE

SHEET 97 OF 182 AUGUSTA, MA

ga.cframe.11

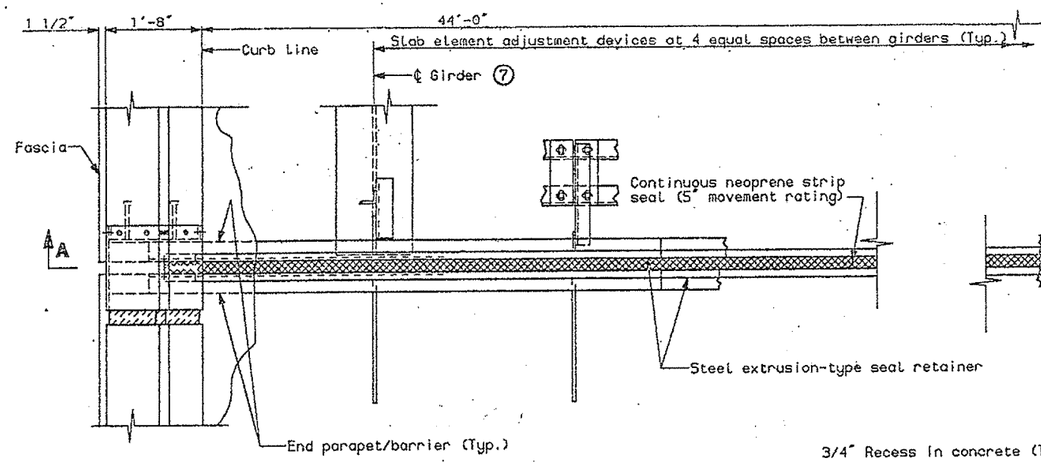

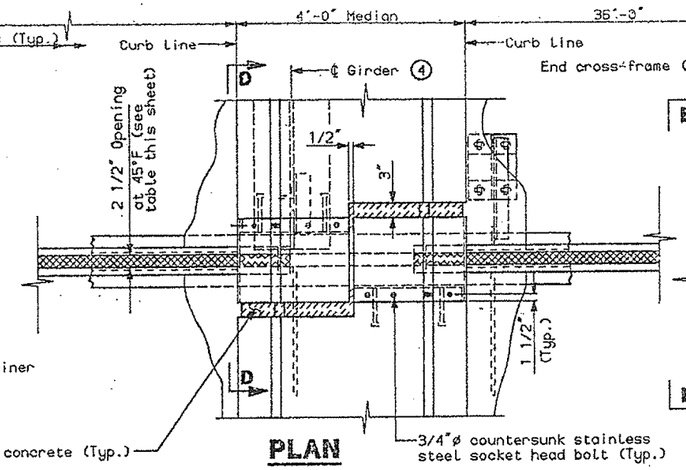

PLAN

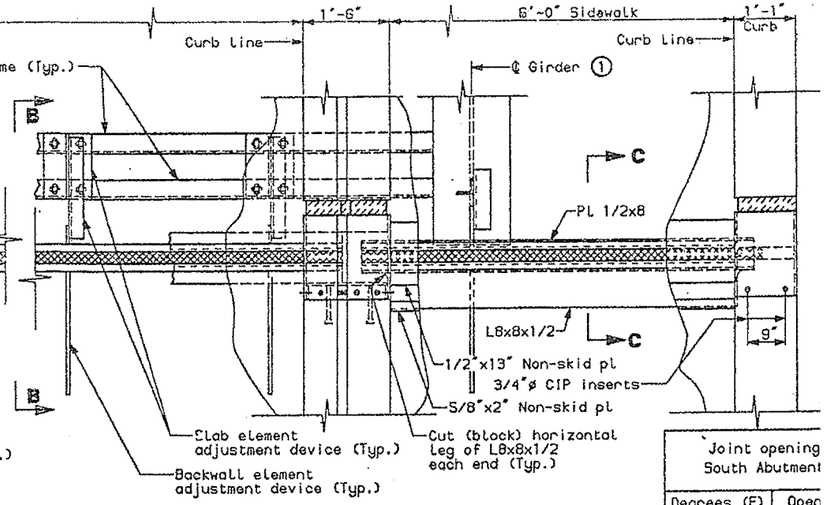

Joint opening South Abutment	
Degrees (F)	Open
120	9/1
105	15/
90	1 5/
75	1 3.
60	2 1.
45	2 1.
30	2 7.
15	3 1.
0	3 11.
-15	4 1/
-30	4 7/

Parapet face details are typical for parapets and median barrier unless noted.

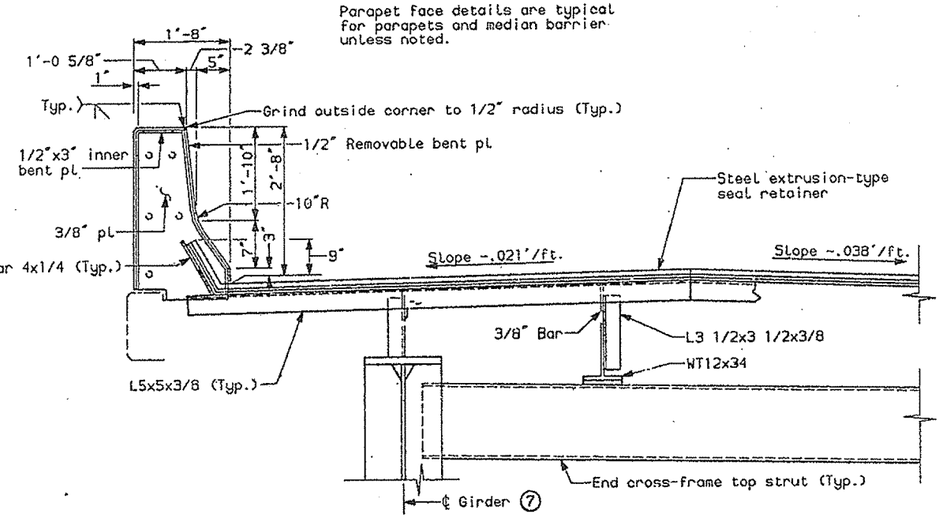

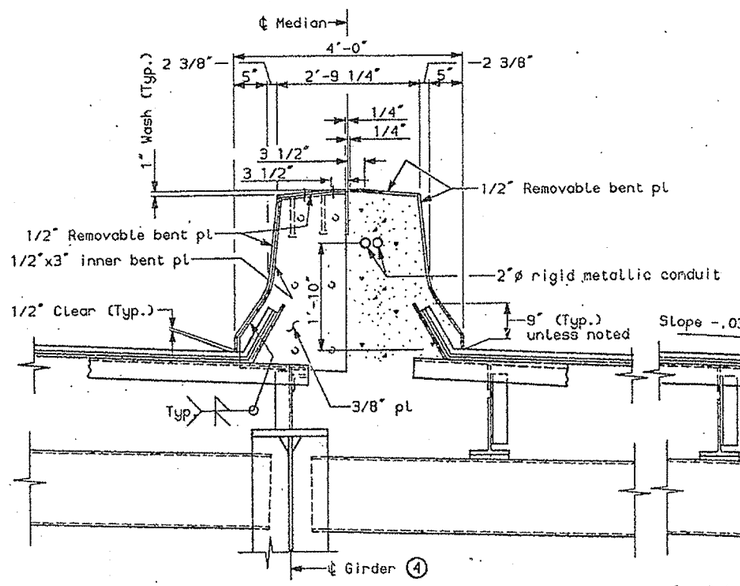

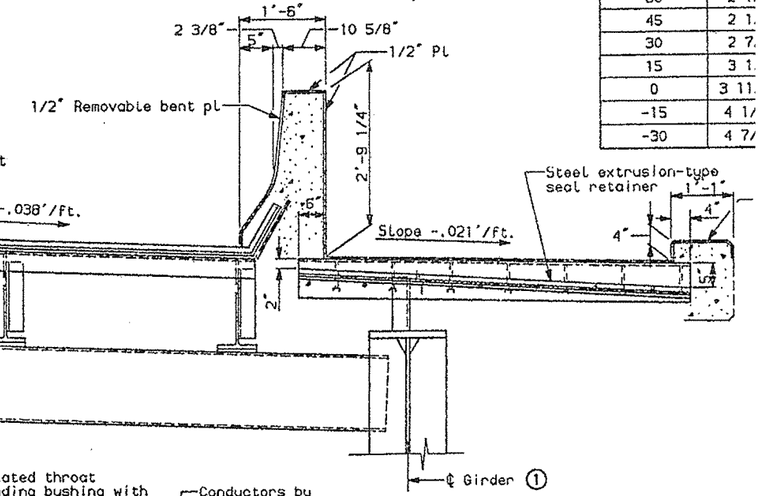

SECTION A-A

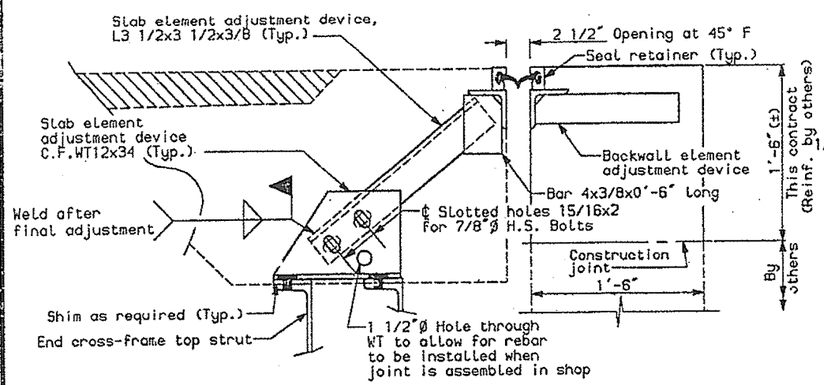

SECTION B-B

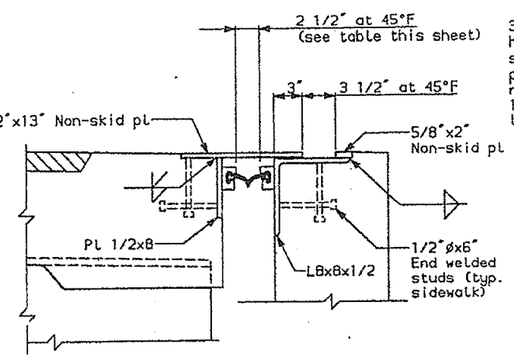

SECTION C-C

3/4"øx6" stud (Typ.)

3/4"ø countersunk stainless steel socket head bolt at 6" c. to c. Provide temporary stud during construction and replace with permanent bolt. Tack weld heavy full hex. nut (stainless steel) to the underside of 1/2"x3" inner plate for fastening. Apply liberal coating of Neversieze to screw threads.

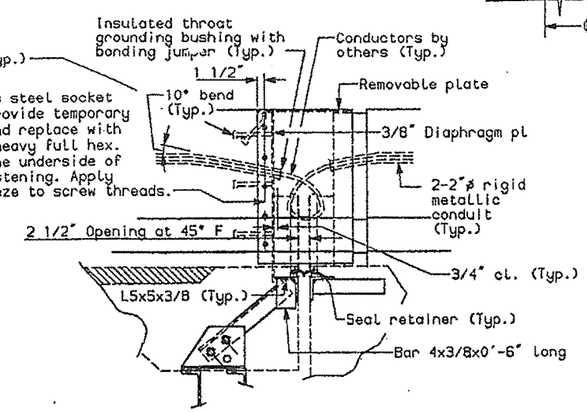

SECTION D-D

NOTES:

For additional details, see DETAILS BD 302-93.
All retainer and support str details on this sheet shall M270(A709), Gr. 36 unless no

SOUTH APPROACH

STATE OF MAINE
DEPARTMENT OF TRANSPO

PORTLAND - S. PORTLA
OVER FORE RI
CUMBERLAND CO

GLAND SEAL D
SOUTH ABUT

DESIGN-DETAILED	MCI	EAR	6-94
CHECKED	JAR		6-94
REVISION			
FIELD-CHANGES			

PLANS

6-27-94

Joint.sa.1

F.H.W.A. REG. NO.	STATE	PROJECT NUMBER
1	MAINE	DPI-0025(002)

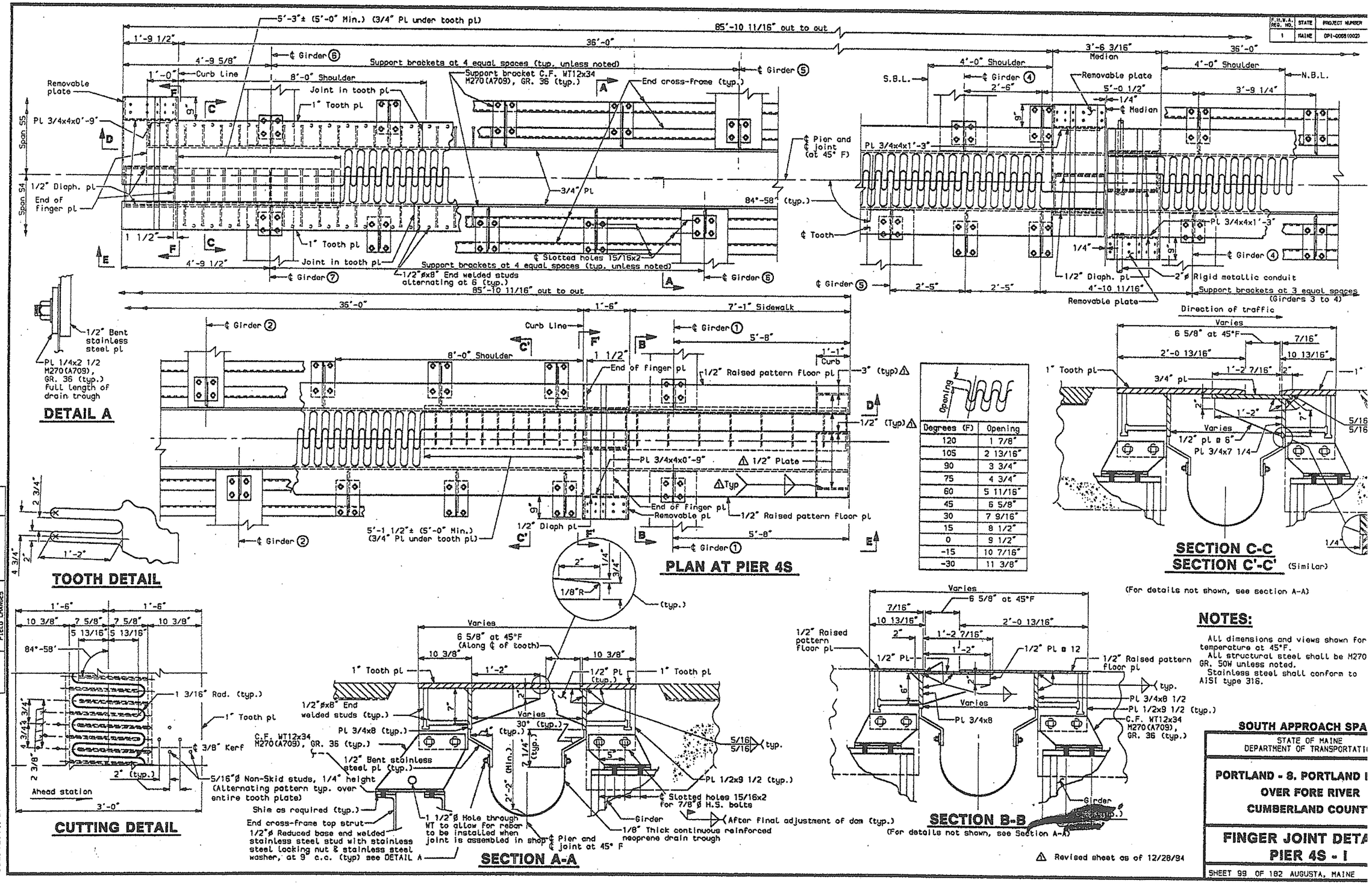

NOTES:

All dimensions and views shown for temperature at 45°F.

All structural steel shall be M270 GR. 50W unless noted.

Stainless steel shall conform to AISI type 316.

PROJECT DESIGN ENGINEER	BY	DATE
DESIGN-DETAILED	MCI	SLH	5-94
CHECKED		JAR	5-94
REVISION		MCI	12-94
FIELD CHANGES			

PLANS

12-28-94

dam.4s.1.rev

SOUTH APPROACH SPA

STATE OF MAINE
DEPARTMENT OF TRANSPORTATI

PORTLAND - S. PORTLAND
OVER FORE RIVER
CUMBERLAND COUNT

FINGER JOINT DETA
PIER 4S - I

SHEET 99 OF 182 AUGUSTA, MAINE

F.H.W.A. REG. NO.	STATE	PROJECT NUMBER	SHEET NO.
1	MAINE	DPI-0058(002)	10

Parapet face details are typical for parapets and median barrier unless noted.

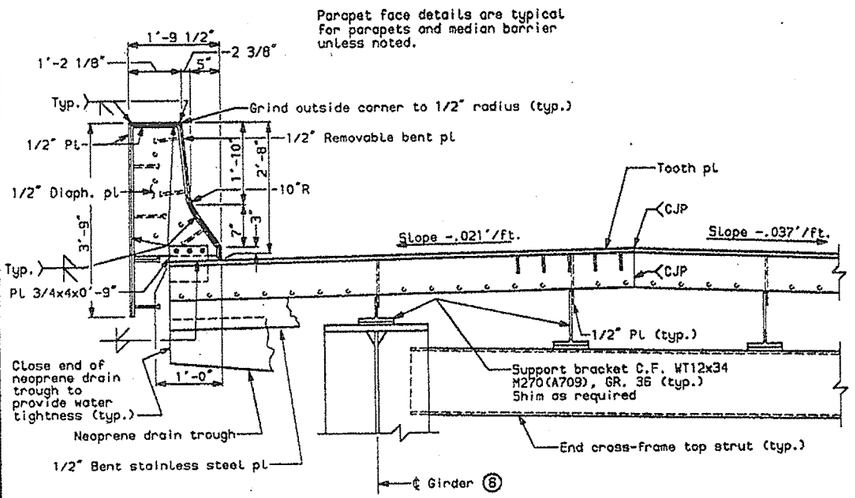

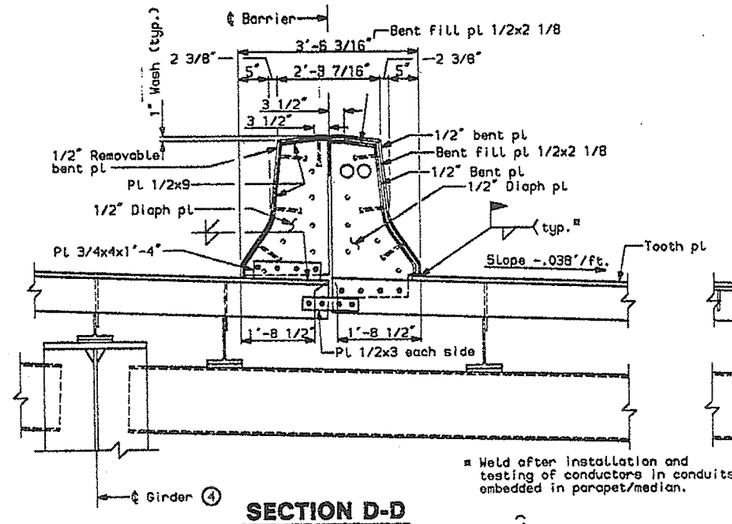

* Weld after installation and testing of conductors in conduits embedded in parapet/median.

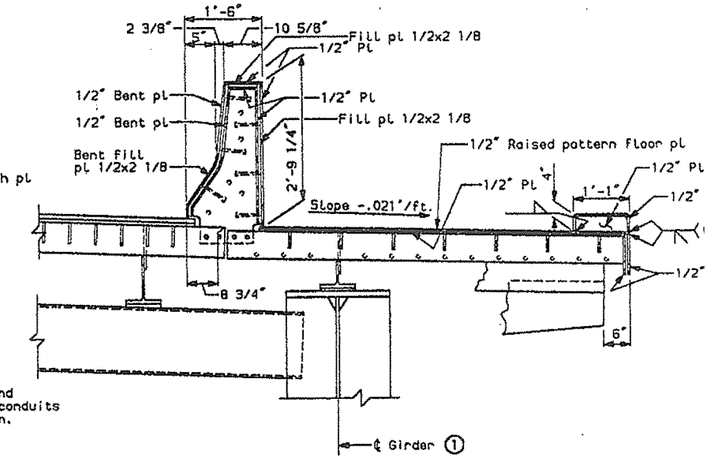

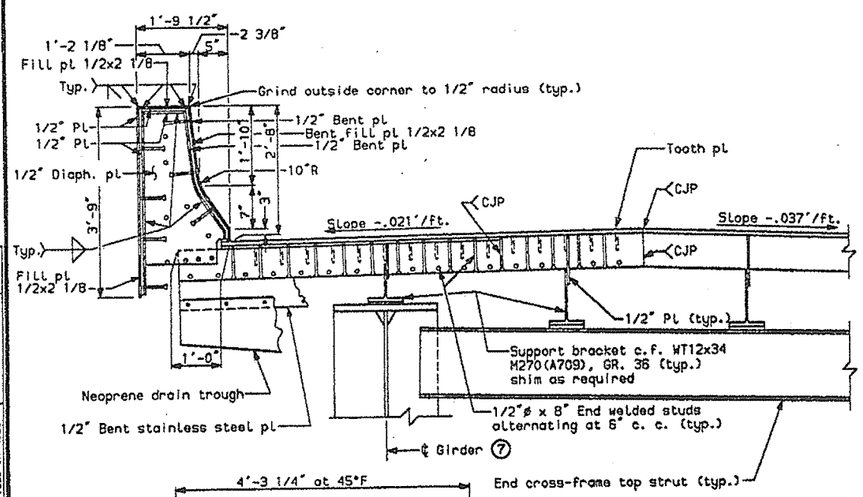

SECTION D-D

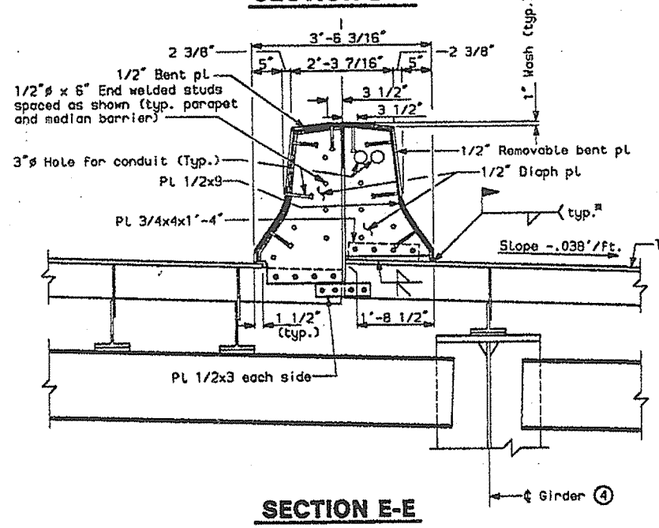

SECTION E-E

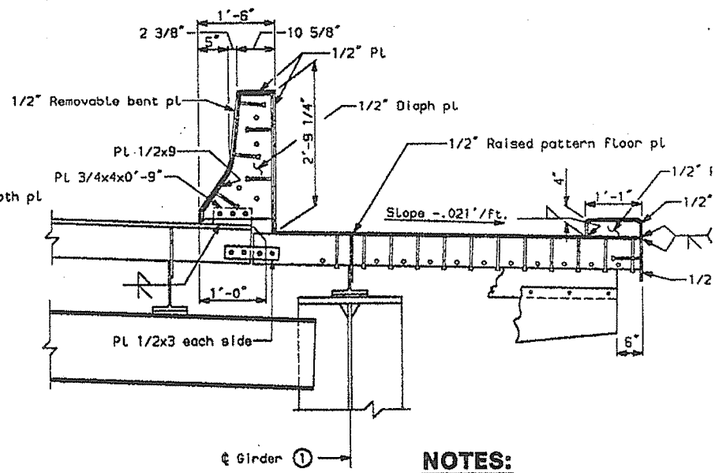

NOTES:

All structural steel shall be M270(GR. 50W unless noted.

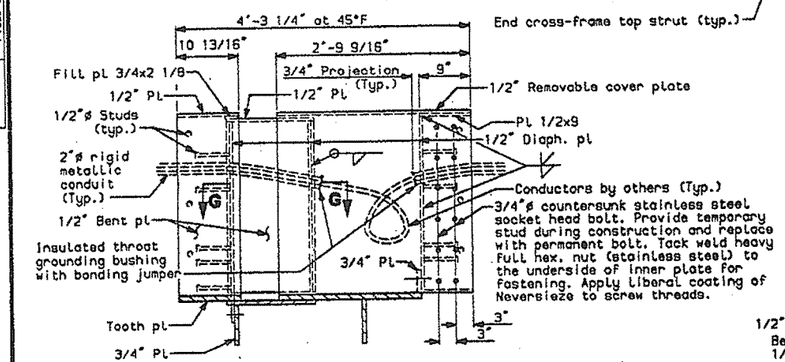

SECTION F-F

(Section F'-F' Similar)

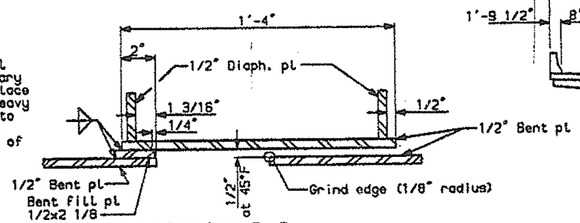

SECTION G-G

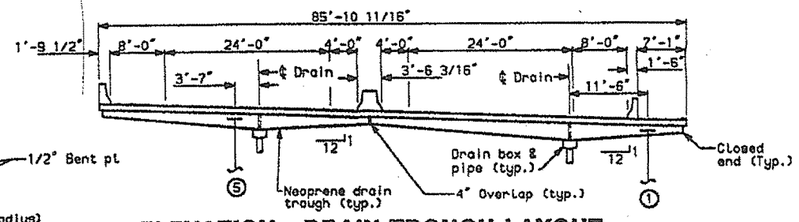

ELEVATION - DRAIN TROUGH LAYOUT

(Girders shown for span 5S, looking ahead station)

⚠ Revised sheet as of 12/28/94

PROJECT DESIGN ENGINEER	BY	DATE
DESIGN-DETAILED	MCI	5-94
CHECKED	JAR	5-94
REVISION	MCI	12-94
FIELD CHANGES		

PLANS

12-28/94

dam.4s.2.rev

SOUTH APPROACH SPA

STATE OF MAINE
DEPARTMENT OF TRANSPORTATIO

PORTLAND - S. PORTLAND E
OVER FORE RIVER
CUMBERLAND COUNTY

FINGER JOINT DETA
PIER 4S - II

SHEET 100 OF 182 AUGUSTA, MAINE

F.H.W.A. REG. NO.	STATE	PROJECT NUMBER
1	MAINE	DP1-0058(002)

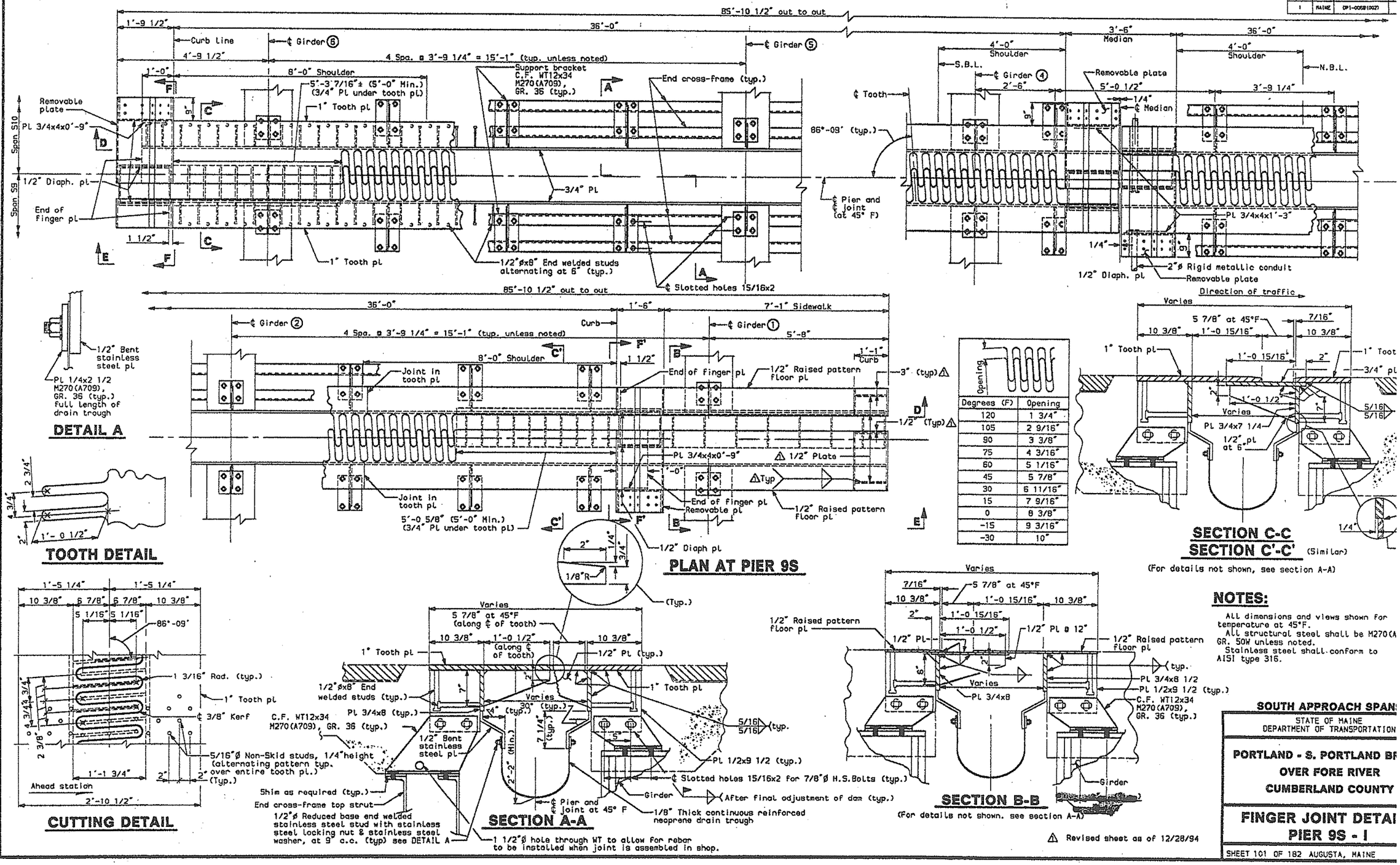

NOTES:

All dimensions and views shown for temperature at 45°F.
All structural steel shall be M270(A709) GR. 50W unless noted.
Stainless steel shall conform to AISI type 316.

△ Revised sheet as of 12/28/94

PROJECT DESIGN ENGINEER	BY	DATE
DESIGN-DETAILED	HCI	SLH	5-94
CHECKED		JAR	5-94
REVISION	HCI	HCI	12-94
FIELD CHANGES			

PLANS

12-28-94

dam.Sa.1.rev

SOUTH APPROACH SPANS

STATE OF MAINE
DEPARTMENT OF TRANSPORTATION

PORTLAND - S. PORTLAND BR
OVER FORE RIVER
CUMBERLAND COUNTY

FINGER JOINT DETAI
PIER 9S - I

SHEET 101 OF 182 AUGUSTA, MAINE

F.H.W.A. REG. NO.	STATE	PROJECT NUMBER
1	MAINE	(P)1-0008(002)

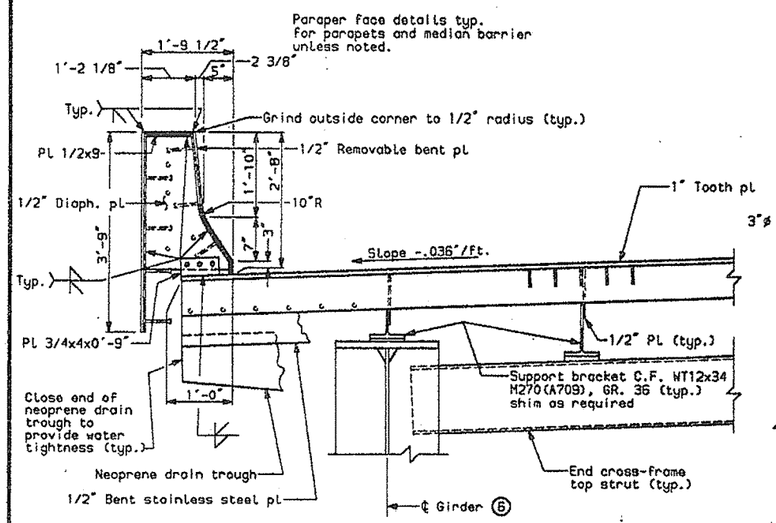

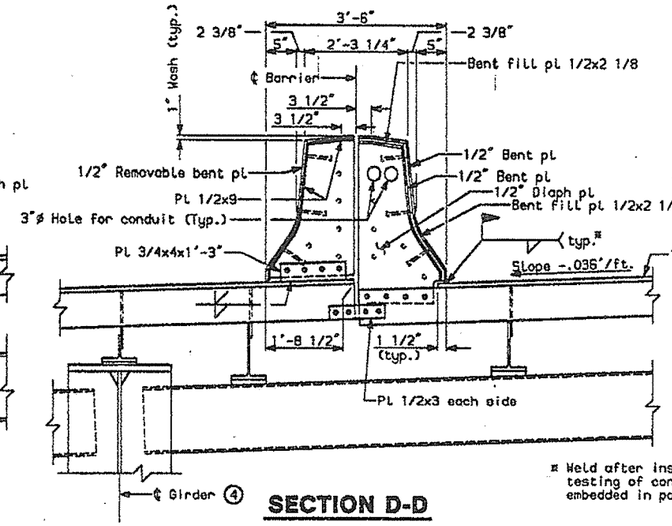

SECTION D-D

* Weld after installation and testing of conductors in conduits embedded in parapet/median.

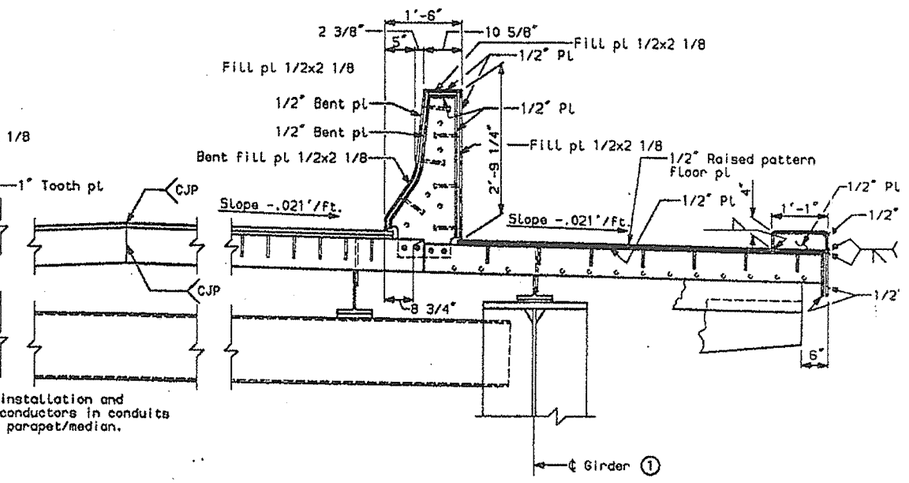

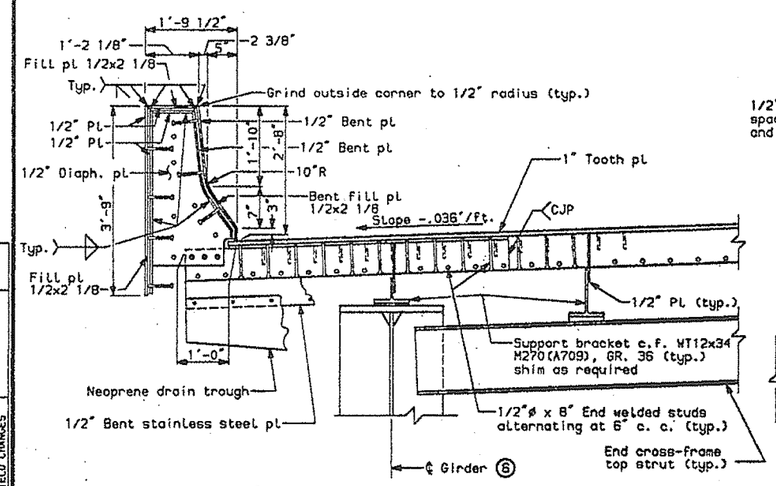

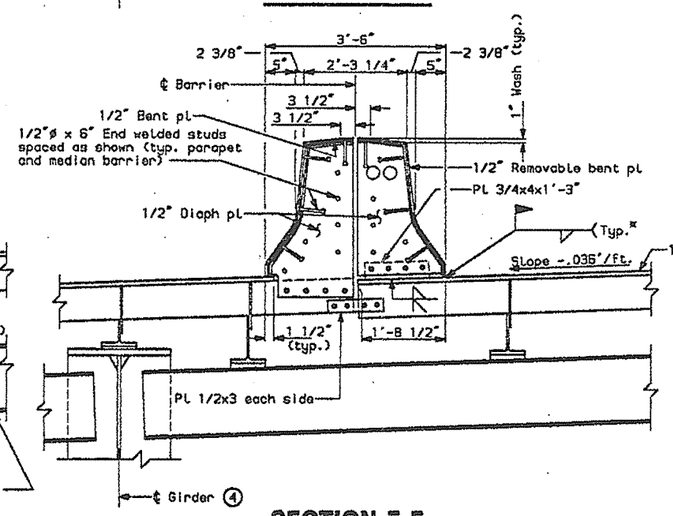

SECTION E-E

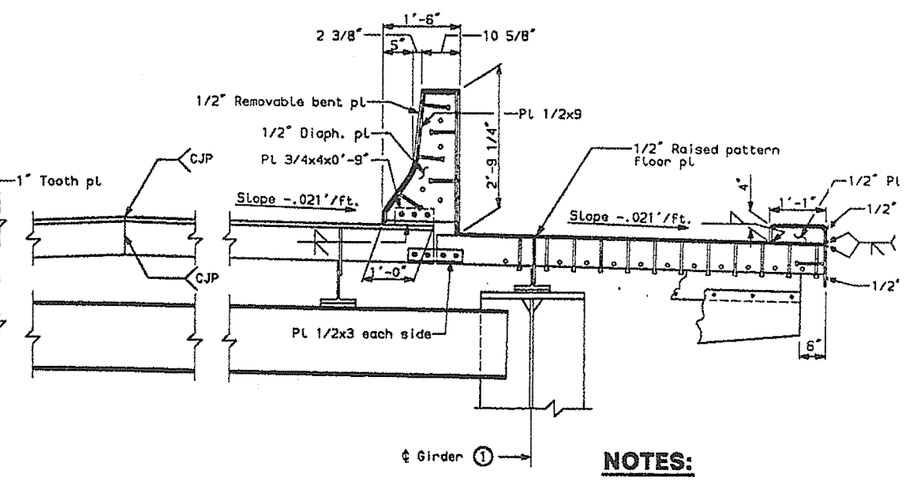

NOTES:

All structural steel shall be M270(A GR. 50W unless noted.

⚠ Revised sheet as of 12/28/9

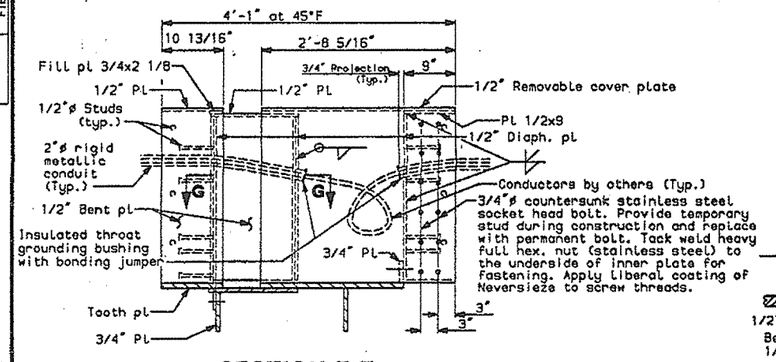

SECTION F-F

(Section F'-F' Similar)

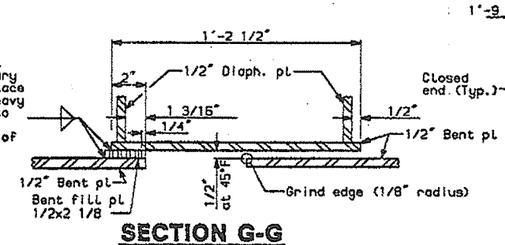

SECTION G-G

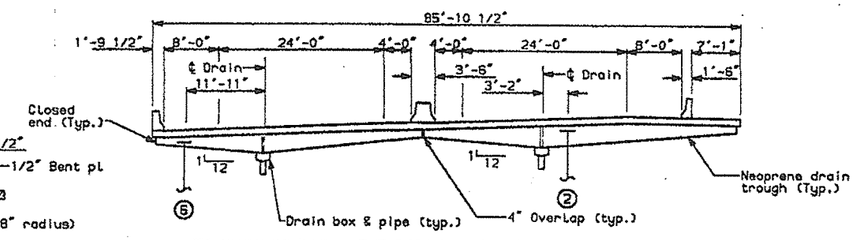

ELEVATION - DRAIN TROUGH LAYOUT

(Looking ahead station)

PROJECT DESIGN ENGINEER	BY	DATE
DESIGN-DETAILED	MCI	5-94
CHECKED	SLH	5-94
REVISION	JAR	12-94
FIELD CHANGES	MCI	

PLANS

12-28-94

dam.9s.2.rev

SOUTH APPROACH SPAN

STATE OF MAINE
DEPARTMENT OF TRANSPORTATION

PORTLAND - S. PORTLAND BI
OVER FORE RIVER
CUMBERLAND COUNTY

FINGER JOINT DETAI
PIER 9S - II

SHEET 102 OF 182 AUGUSTA, MAINE

F.H.W.A. REG. NO.	STATE	PROJECT NUMBER
1	MAINE	DPI-0059(002)

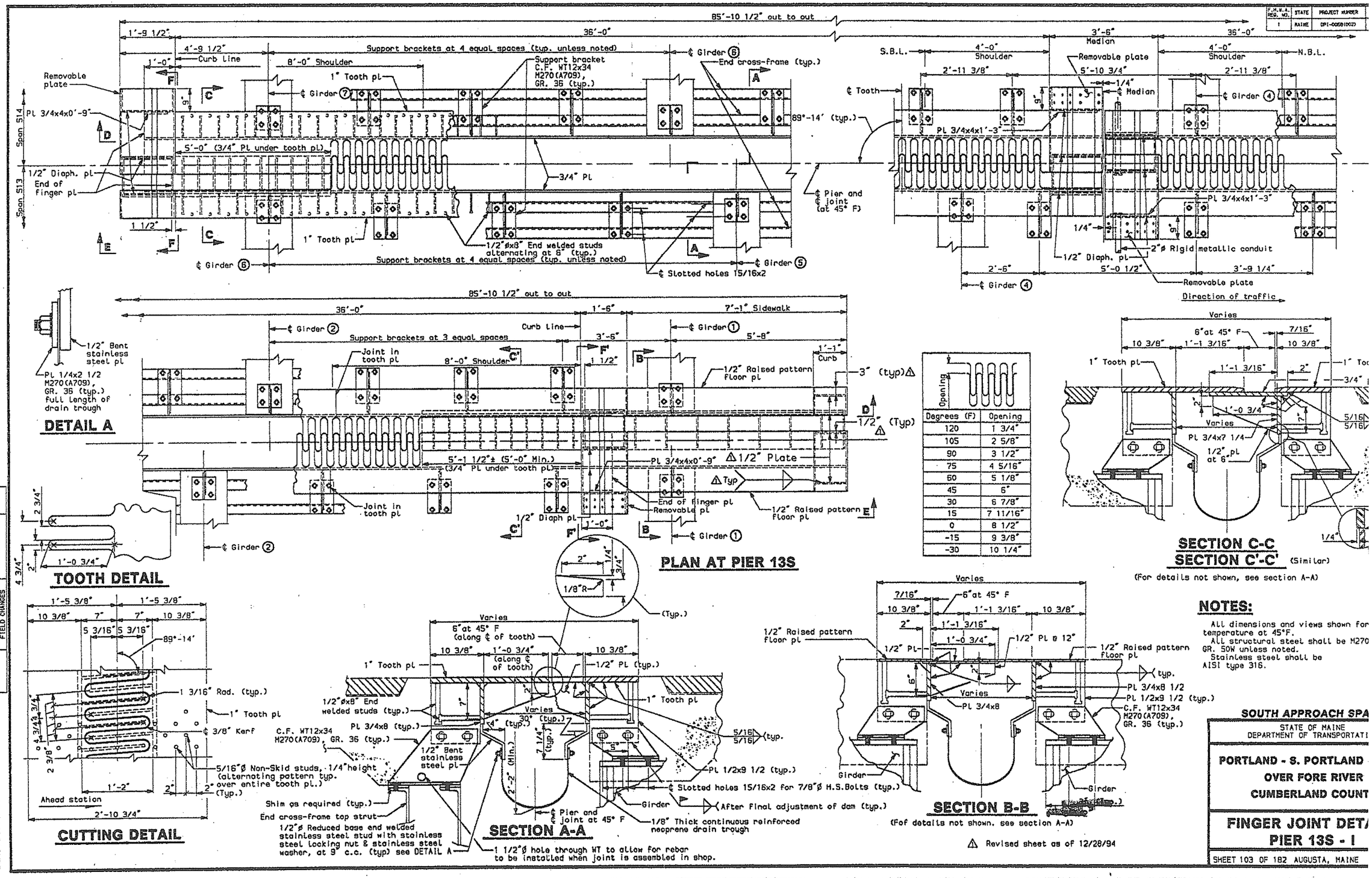

NOTES:

All dimensions and views shown for temperature at 45°F.
All structural steel shall be M270 GR. 50W unless noted.
Stainless steel shall be AISI type 316.

PROJECT DESIGN ENGINEER	BY	DATE
DESIGN-DETAILED	MCI	SLH	5-94
CHECKED		JAR	5-94
REVISION		MCI	12-94
FIELD CHANGES			

PLANS

12-28-94

dam.13s.1.rev

SOUTH APPROACH SPA

STATE OF MAINE
DEPARTMENT OF TRANSPORTATI

PORTLAND - S. PORTLAND
OVER FORE RIVER
CUMBERLAND COUNT

FINGER JOINT DETA
PIER 13S - I

SHEET 103 OF 182 AUGUSTA, MAINE

F.H.W.A. REG. NO.	STATE	PROJECT NUMBER
1	MAINE	DPI-0008(002)

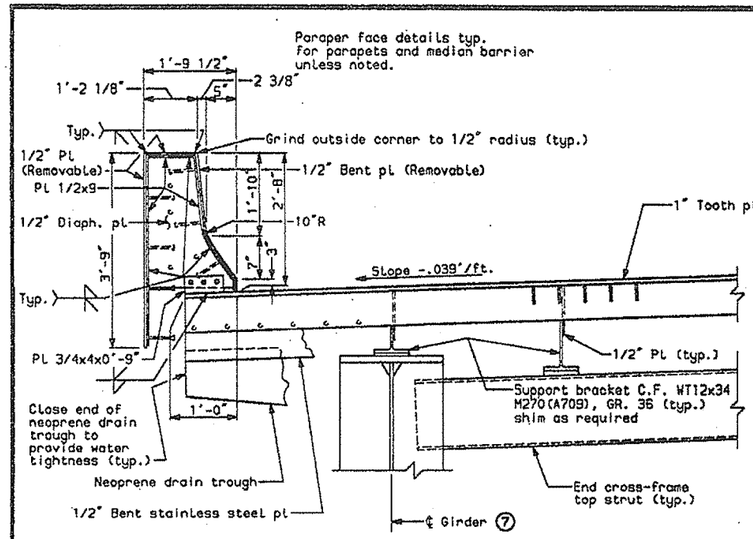

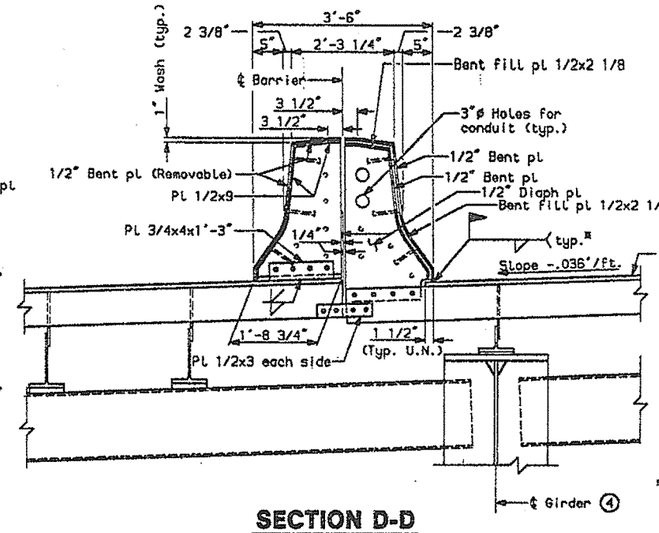

SECTION D-D

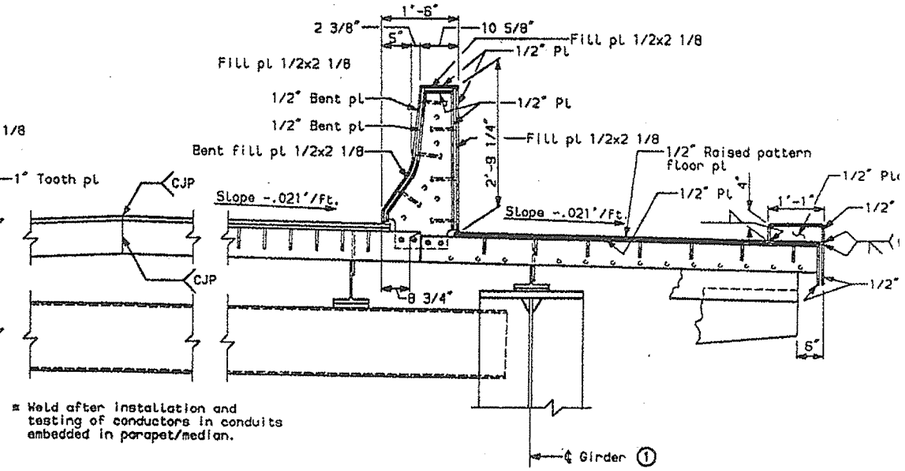

* Weld after installation and testing of conductors in conduits embedded in parapet/median.

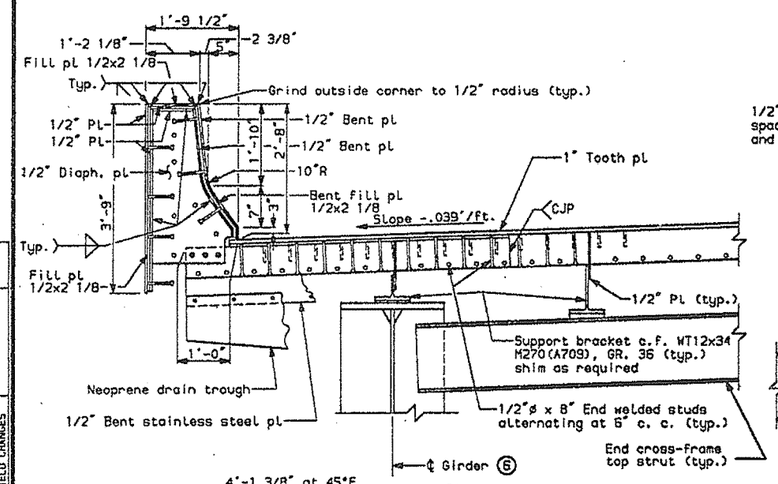

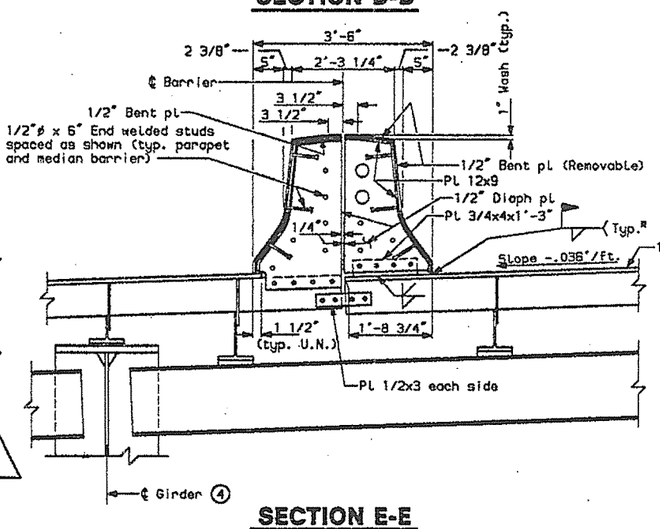

SECTION E-E

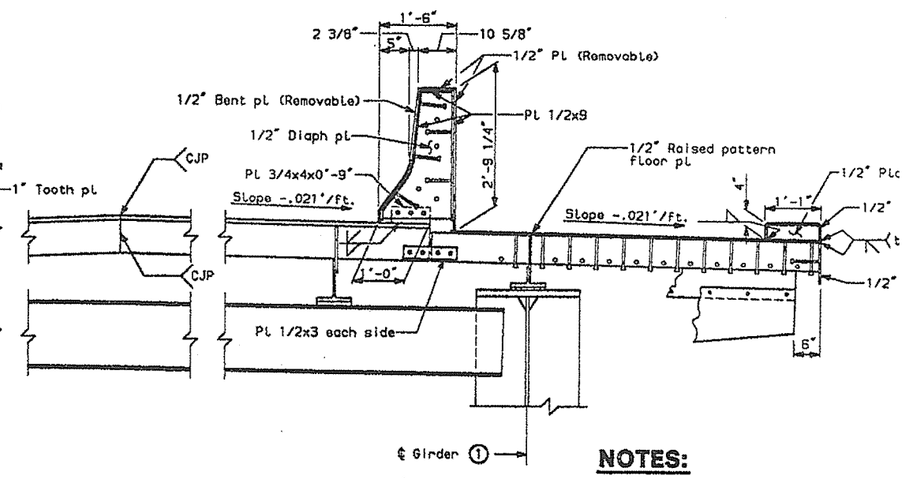

NOTES:

All structural steel shall be M270(A7
GR. 50W unless noted.

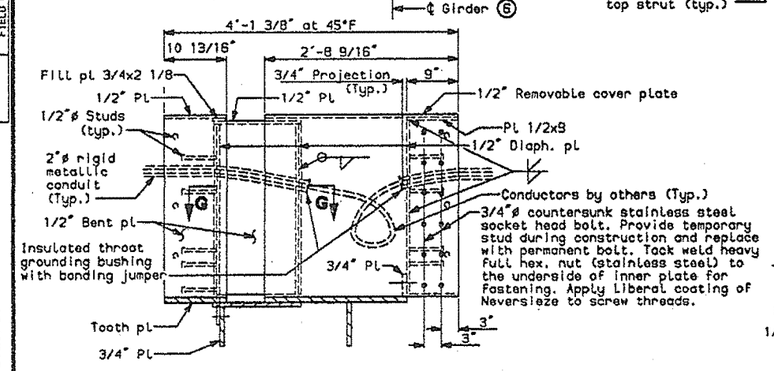

SECTION F-F

(Section F'-F' Similar)

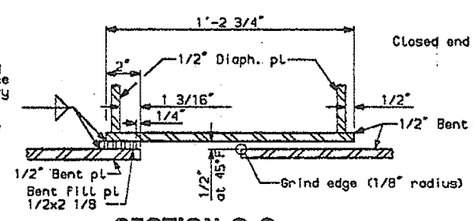

SECTION G-G

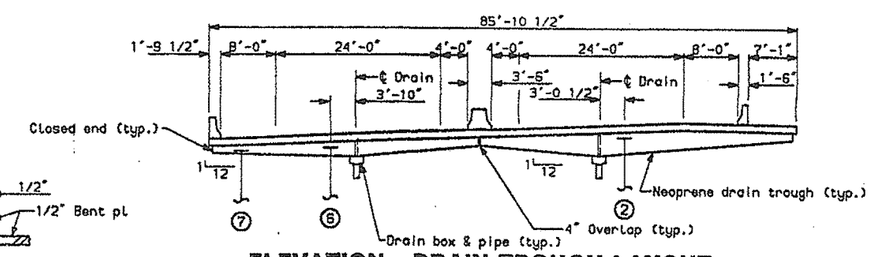

ELEVATION - DRAIN TROUGH LAYOUT

(Girders shown for span S14, looking ahead station)

⚠ Revised sheet as of 12/28/94

PROJECT DESIGN ENGINEER	BY	DATE
DESIGN-DETAILED	MCI	5-94
CHECKED	SLH	5-94
REVISION	JAR	12-94
FIELD CHANGES	MCI	

PLANS

12-28-94

dam.13e.2.rev

SOUTH APPROACH SPANS

STATE OF MAINE
DEPARTMENT OF TRANSPORTATION

PORTLAND - S. PORTLAND BR
OVER FORE RIVER
CUMBERLAND COUNTY

FINGER JOINT DETAI
PIER 13S - II

F.H.W.A. REG. NO.	STATE	PROJECT NUMBER
1	MAINE	DPI-0058(002)

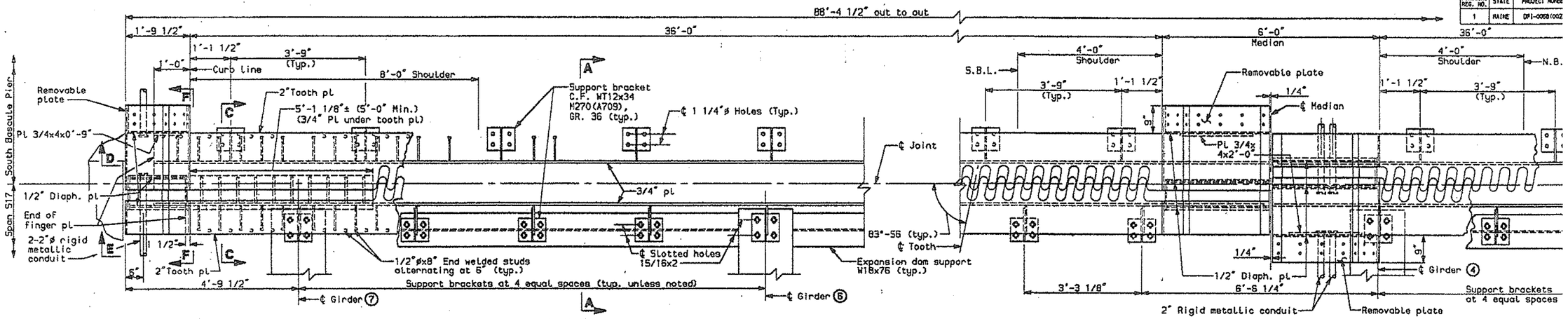

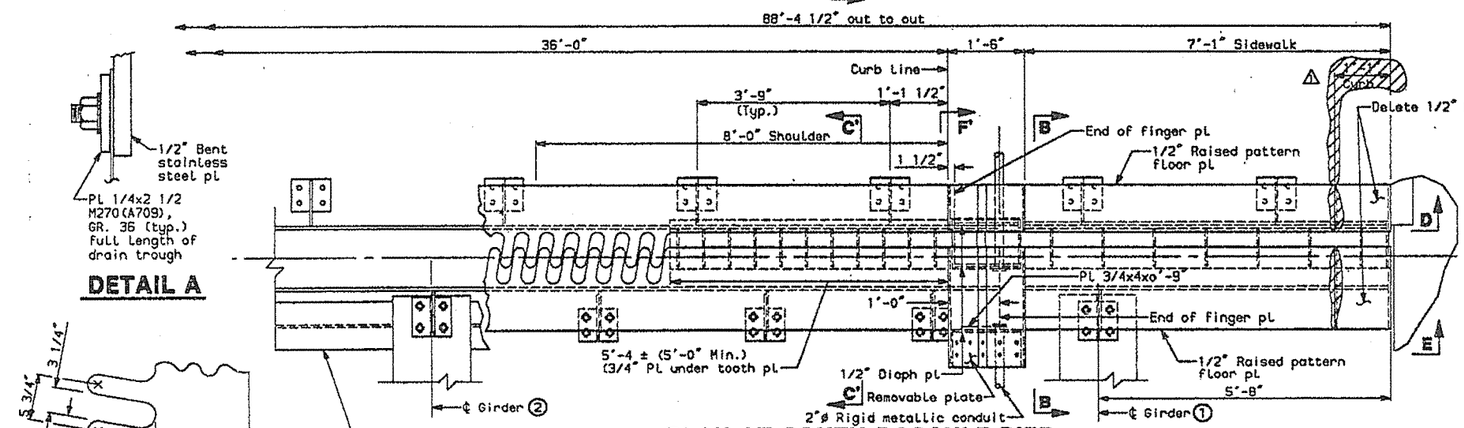

PLAN AT SOUTH BASCULE PIER

DETAIL A

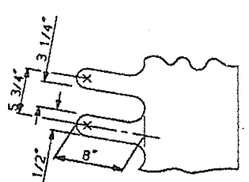

TOOTH DETAIL

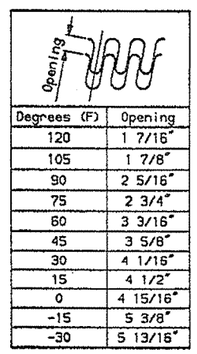

Degrees (F)	Opening
120	1 7/16"
105	1 7/8"
90	2 5/16"
75	2 3/4"
60	3 3/16"
45	3 5/8"
30	4 1/16"
15	4 1/2"
0	4 15/16"
-15	5 3/8"
-30	5 13/16"

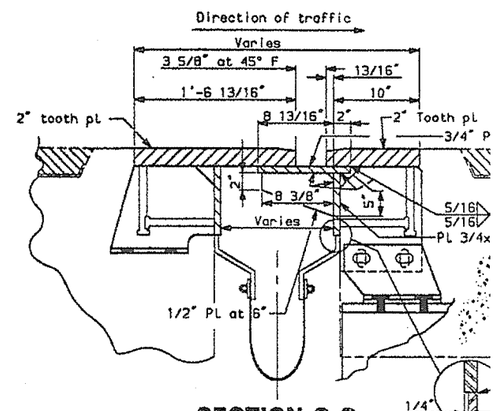

SECTION C-C
SECTION C'-C' (Similar)

(For details not shown, see section A-A)

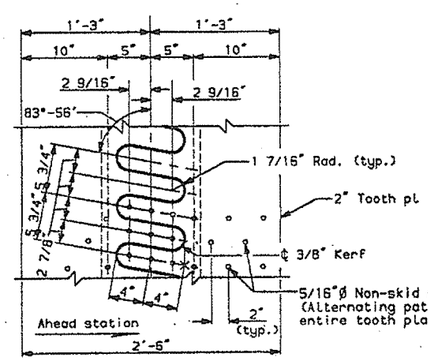

CUTTING DETAIL

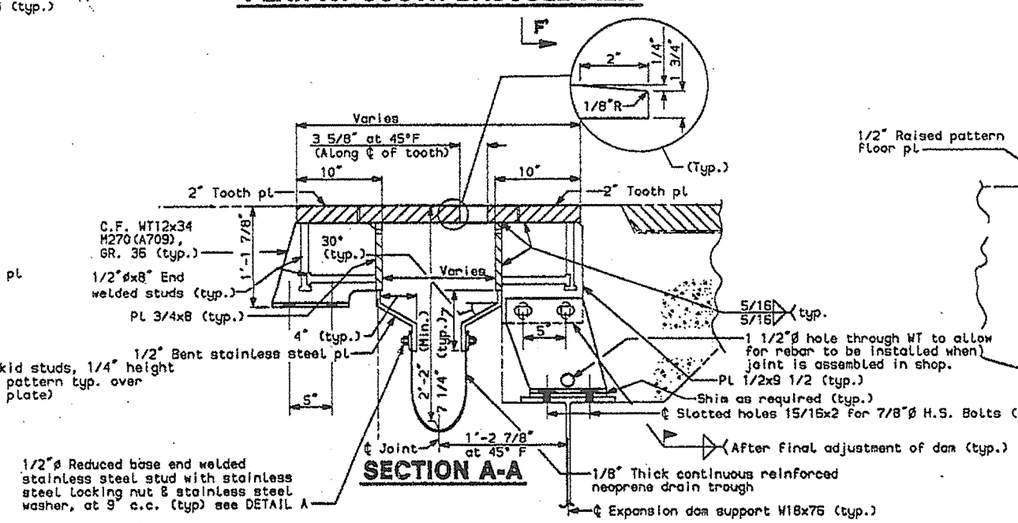

SECTION A-A

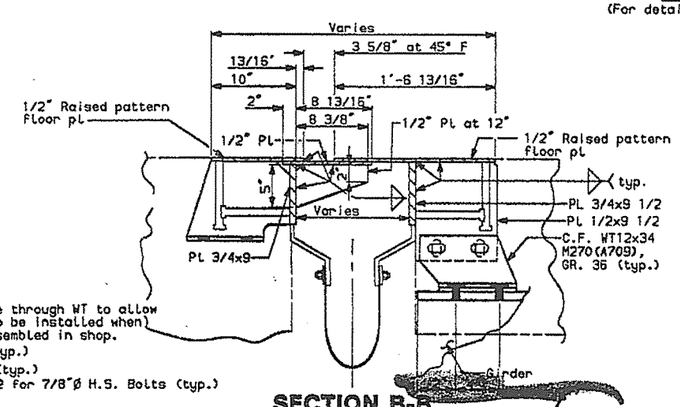

SECTION B-B

(For details not shown, see section A-A)

NOTES:

All dimensions and views shown temperature at 45°F.
All structural steel shall be M. GR. 50W unless noted.
Stainless steel shall be AISI type 316.

⚠ Revised sheet as of 12/28/94

PROJECT DESIGN ENGINEER	BY	DATE
DESIGN-DETAILED	MCI	5-94
CHECKED	SLH	5-94
REVISION	JAR	5-94
FIELD CHANGES	MCI	12-94

PLANS

12-28-94

dam.sbas.1.rev

SOUTH APPROACH S

STATE OF MAINE
DEPARTMENT OF TRANSPORT.

PORTLAND - S. PORTLAN
OVER FORE RIVE
CUMBERLAND COU

FINGER JOINT DE
SOUTH BASCULE F

SHEET 105 OF 182 AUGUSTA, MAINE

F.H.W.A. REG. NO.	STATE	PROJECT NUMBER
1	MAINE	DPI-0068(002)

Parapet face details typ. for parapets and median barrier, unless noted

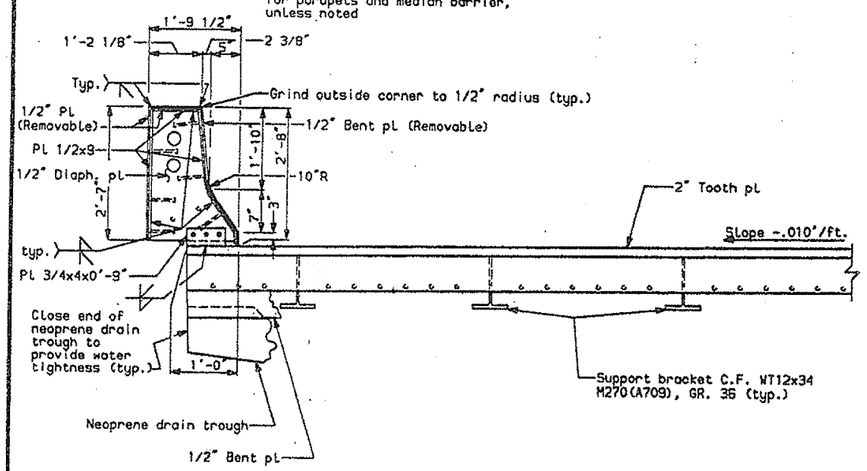

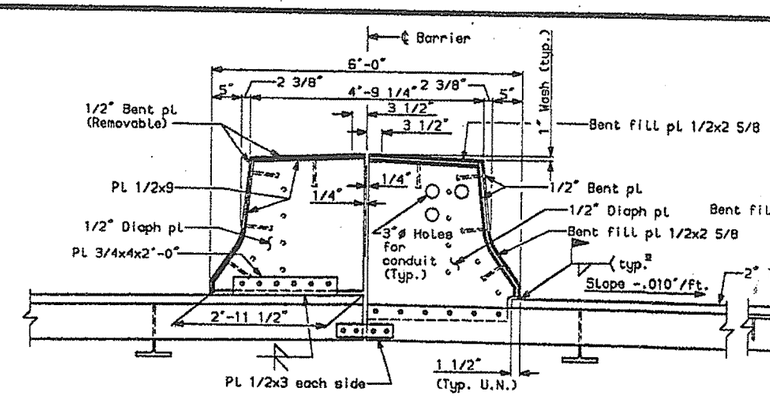

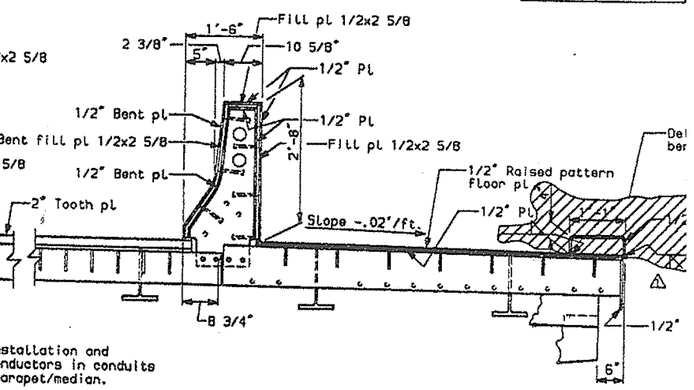

* Weld after installation and testing of conductors in conduits embedded in parapet/median.

SECTION D-D

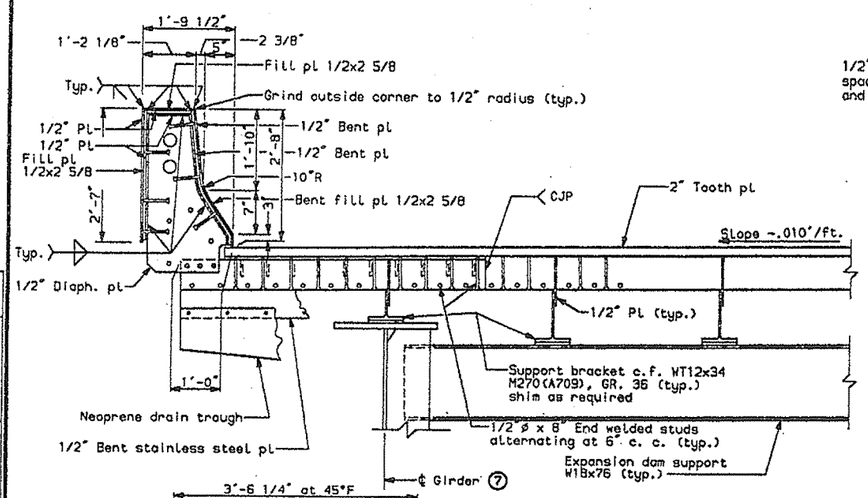

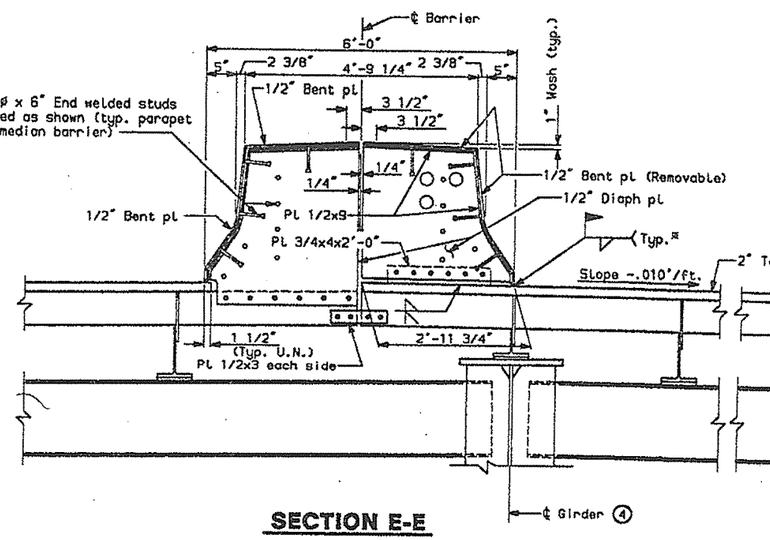

SECTION E-E

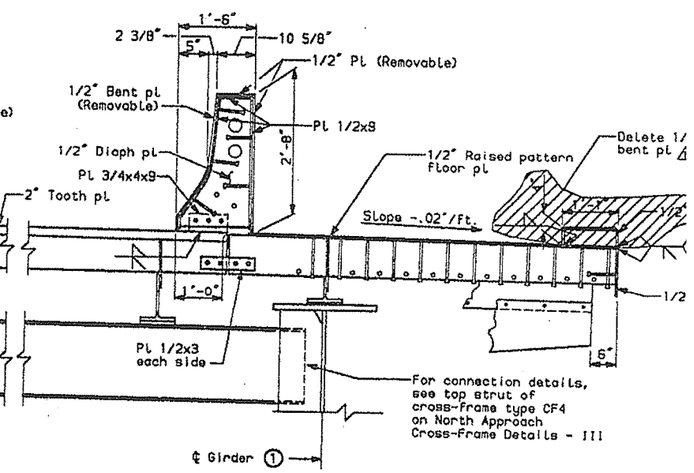

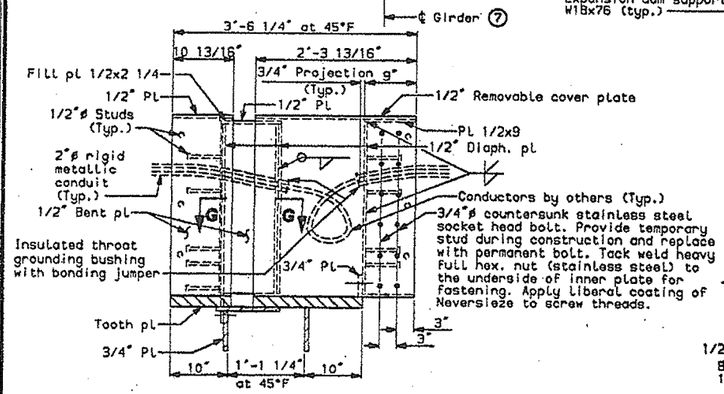

SECTION F-F

(Section F'-F' Similar)

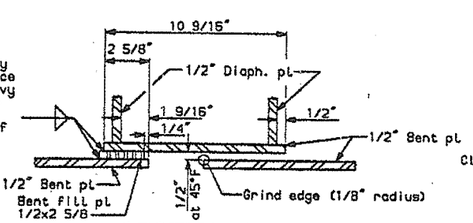

SECTION G-G

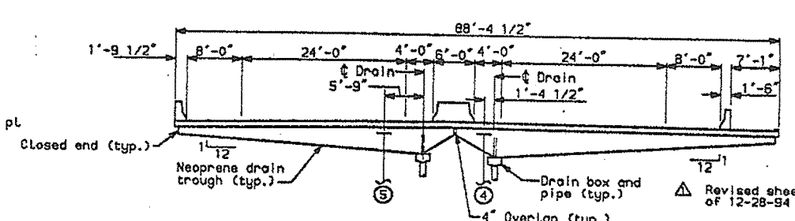

ELEVATION - DRAIN TROUGH LAYOUT

(Looking ahead station)

NOTES:

All structural steel shall be M270(A
GR. 50W unless noted.

PROJECT DESIGN ENGINEER		BY	DATE
PLANS	DESIGN-DETAILED	MCI	5-94
	CHECKED	JNR	5-94
	REVISION	MCI	12-94
	FIELD CHANGES		

12-28-94

dam.abaa.2.rev

SOUTH APPROACH SPAN

STATE OF MAINE
DEPARTMENT OF TRANSPORTATION

PORTLAND - S. PORTLAND BI
OVER FORE RIVER
CUMBERLAND COUNTY

FINGER JOINT DETAI
SOUTH BASCULE PIER

SHEET 106 OF 182 AUGUSTA, MAINE

F.H.W.A. REG. NO.	STATE	PROJECT
1	MAINE	DPI-00

POT BEARING SCHEDULE

Pier Location		South Abut.	1S	2S		3S	4S (Back sta.)	4S (Ahd. sta.)	5S	6S	7S		8S	9S (Back sta.)
Bearing type		Expansion	Expansion	Fixed	Expansion	Expansion	Expansion	Expansion	Expansion	Expansion	Fixed	Expansion	Expansion	Expansion
Quantity		7	7	5	2	7	7	6	6	6	4	2	6	6
Design vertical service loads	Dead	229 kips	647 kips	489 kips		643 kips	217 kips	243 kips	707 kips	570 kips	591 kips		776 kips	261 kips
	Live	106 kips	196 kips	176 kips		199 kips	105 kips	108 kips	182 kips	186 kips	194 kips		161 kips	79 kips
Design horizontal seismic load		285 kips	458 kips	837 kips		453 kips	226 kips	226 kips	455 kips	458 kips	704 kips		458 kips	239 kips
Design rotation		0.015 rad	0.015 rad	0.015 rad		0.015 rad	0.015 rad	0.015 rad	0.015 rad	0.015 rad	0.015 rad		0.015 rad	0.015 rad
Total temperature movement (in.) (one way)		1.97	0.99	—		0.99	1.97	2.93	1.96	1.00	—		1.05	2.10
Calculated seismic movement (in.) (one way)		1.3	1.3	—		1.3	1.3	3.0	3.0	3.0	—		3.0	3.0
Delta (See note "A")		3/8"	—	—		—	5/16"	3/8"	—	—	—		—	7/16"
Maximum pressure on PTFE *		3437 psi	3456 psi	—	3463 psi	3452 psi	3467 psi	3445 psi	3494 psi	3479 psi	—	3492 psi	3486 psi	3478 psi
Maximum pressure on elastomer *		3147 psi	3268 psi	3463 psi	3202 psi	3264 psi	3169 psi	3161 psi	3308 psi	3278 psi	3492 psi	3247 psi	3305 psi	3185 psi
Allowable coefficient of friction on PTFE/stainless steel, at min. load		0.04	0.04	—		0.04	0.04	0.04	0.04	0.04	—		0.04	0.04
"DT" (See notes)		0.258	0.130	—		0.130	0.259	0.377	0.255	0.129	—		0.140	0.280
Surface coating requirements & specifications		(See specifications)												

Pier Location		9S (ahd. sta.)	10S	11S		12S	13S (Back sta.)	13S (Ahd. sta.)	14S	15S		16S	South Bascule
Bearing type		Expansion	Expansion	Fixed	Expansion	Expansion	Expansion	Expansion	Expansion	Fixed	Expansion	Expansion	Expansion
Quantity		6	6	4	2	6	6	7	7	5	2	7	7
Design vertical service loads	Dead	264 kips	752 kips	567 kips		752 kips	264 kips	259 kips	706 kips	547 kips		696 kips	207 kips
	Live	81 kips	190 kips	188 kips		194 kips	81 kips	78 kips	191 kips	173 kips		226 kips	100 kips
Design horizontal seismic load		245 kips	465 kips	510 kips		465 kips	216 kips	216 kips	395 kips	440 kips		350 kips	231 kips
Design rotation		0.015 rad	0.015 rad	0.015 rad		0.015 rad	0.015 rad	0.015 rad	0.015 rad	0.015 rad		0.015 rad	0.015 rad
Total temperature movement (in.) (one way)		2.14	1.08	—		1.08	2.14	2.21	1.11	—		1.11	2.17
Calculated seismic movement (in.) (one way)		4.0	4.0	—		4.0	4.0	6.0	6.0	—		6.0	6.0
Delta (See note "A")		7/16"	—	—		—	7/16"	7/16"	—	—		—	3/8"
Maximum pressure on PTFE *		3451 psi	3458 psi	—	3451 psi	3458 psi	3441 psi	3447 psi	3477 psi	—	3472 psi	3477 psi	3440 psi
Maximum pressure on elastomer *		3164 psi	3280 psi	3451 psi	3205 psi	3280 psi	3154 psi	3157 psi	3293 psi	3472 psi	3219 psi	3296 psi	3138 psi
Allowable coefficient of friction on PTFE/stainless steel, at min. load		0.04	0.04	—		0.04	0.04	0.04	0.04	—		0.04	0.04
"DT" (See notes)		0.271	0.137	—		0.137	0.271	0.288	0.146	—		0.147	0.287
Surface coating requirements & specifications		(See specifications)											

EQ Load is per bearing, and is ½ of total EQ Load.

* 3500 psi maximum allowable, 700 psi minimum allowable

BEARING SEAT ELEVATIONS

Location	Girder number 1	2	3	4	5	6	7
South Abutment	17.05	17.41	17.95	18.36	18.90	19.41	19.79
Pier 1S	20.66	21.06	21.59	21.98	22.29	22.83	23.19
Pier 2S	24.45	24.85	25.39	25.80	25.96	26.49	26.80
Pier 3S	27.87	28.26	28.79	29.19	29.40	29.89	30.23
Pier 4S (back)	31.42	31.80	32.32	32.69	32.94	33.46	33.80
Pier 4S (ahd)	31.10	31.52	32.09	32.53	33.07	33.47	—
Pier 5S	33.82	34.22	34.80	35.24	35.81	36.21	—
Pier 6S	36.86	37.26	37.83	38.27	38.82	39.25	—
Pier 7S	39.94	40.36	40.86	41.25	41.75	42.03	—
Pier 8S	44.07	44.16	44.14	44.13	44.11	44.13	—
Pier 9S (back)	48.41	48.38	47.84	47.43	46.90	46.49	—
Pier 9S (ahd)	47.99	47.95	47.40	47.00	46.45	46.03	—

Location	Girder numb 1	2	3	4	
Pier 10S	50.84	50.79	50.21	49.75	49
Pier 11S	54.12	54.14	53.56	53.10	52
Pier 12S	57.23	57.18	56.59	56.14	55
Pier 13S (bak)	60.76	60.72	60.13	59.69	59
Pier 13S (ahd)	60.74	60.77	60.27	59.81	59
Pier 14S	63.76	63.80	63.32	62.86	62
Pier 15S	67.25	67.37	66.86	66.40	66
Pier 16S	70.15	70.23	69.88	69.55	69
South Bascule Pier	71.71	71.71	71.83	71.96	71

FIXED BEARINGS

Location	Quantity	Beveled sole plate C1	C2	C3	C4	Slope %	Piston pla H x ø
Pier 2S	5	2'-9"	2'-9"	2 3/4"	1 5/16"	+2.1437	3 3/4" x 15.595
Pier 7S	4	2'-11"	2'-11"	2 1/2"	1"	+1.7756	3 1/4" x 16.845
Pier 11S	4	2'-7"	2'-7"	2 1/4"	3/4"	+1.7756	2 3/4" x 16.595
Pier 15S	5	2'-7"	2'-7"	2 1/4"	11/16"	+1.7756	2 5/8" x 16.220

Location	Elastomeric disc H x ø	Brass sealing ring	Pot plate L x W	C6	C7	
Pier 2S	1 1/8" x 15 5/8"ø	5/16"ø	1'-5 1/8" x 1'-5 1/8"	4.0000"	3/4"	3
Pier 7S	1 1/4" x 16 7/8"ø	5/16"ø	1'-6 1/2" x 1'-6 1/2"	4.0000"	13/16"	7
Pier 11S	1 1/8" x 16 5/8"ø	5/16"ø	1'-6 1/8" x 1'-6 1/8"	3.5000"	3/4"	3
Pier 15S	1 1/8" x 16 1/4"ø	5/16"ø	1'-5 3/4" x 1'-5 3/4"	3.5000"	3/4"	3

Location	Masonry plate C10	C11	C12	C13	C14	Anchor Bolt C15	C16	C17	
Pier 2S	3 1/2"	1'-10"	3 1/2"	4'-2"	3 1/2"	3 1/4"ø	13"	15"	4
Pier 7S	3 3/4"	2'-0 1/2"	3 1/2"	4'-3"	3 1/2"	3"ø	13"	15"	4
Pier 11S	3 3/4"	1'-11 1/2"	3"	3'-10"	3"	2 1/2"ø	13"	14"	3
Pier 15S	3 1/2"	1'-11"	3"	3'-10"	3"	2 1/2"ø	13"	14"	3

TABLE "V"

Location	Weld size
Pier 2S	7/16"
Pier 7S	3/8"
Piers 11S and 15S	1/4"

NOTE A:

The bearing details are shown for a normal temperature of 45° F.. It is anticipated that the girder bottom flange at the location listed in the table will move the distance, Delta, indicated away from the fixed bearings due to placement of the superstructure concrete.

No separate payment will be made for resetting bearing to the final position if an adjustment is required.

TABLE "W"

Location	Weld size
Piers 2S, 7S, 11S and 15S	3/8"

NOTES:

All structural steel shall be M270 (A709), Gr. 50, unless noted.

Vertical group loads are not factored.

Horizontal group loads are factored.

Each bearing with transverse restraint is desigr 50% of the total horizontal load.

The seismic design loads are for the connection between the superstructure and substructure.

"DT" is the distance in inches between the cent masonry and sole plates. "DT" is measured perper the transverse centerline of the plate.

"DT"= 0.00" at 45°F. Adjust "DT" by multiples c shown in the table for all multiples of 10 degre temperature variation above or below 45° F.

"DT" is measured toward the fixed bearing for t below 45° F., and away from the fixed bearing fo temperatures above 45° F.

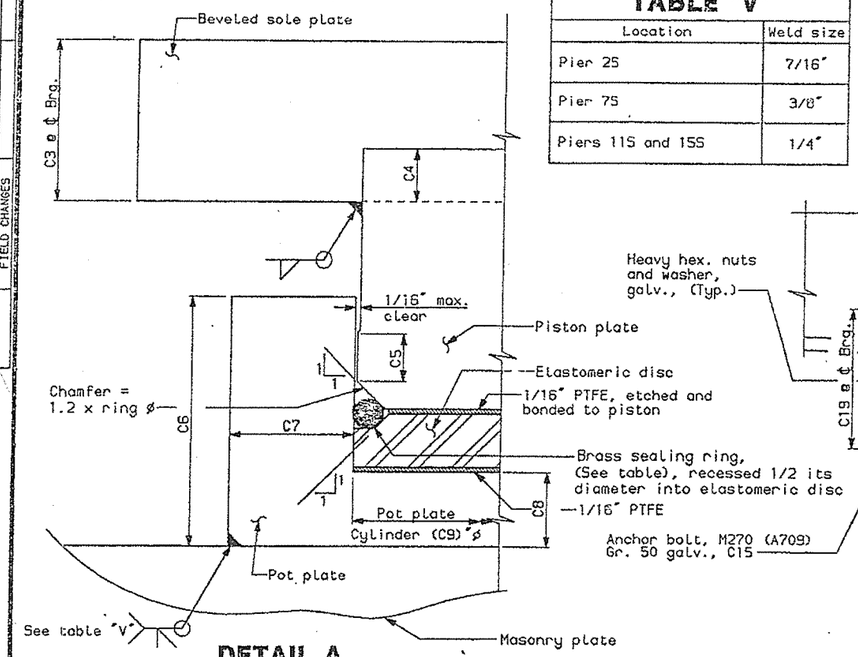

DETAIL A

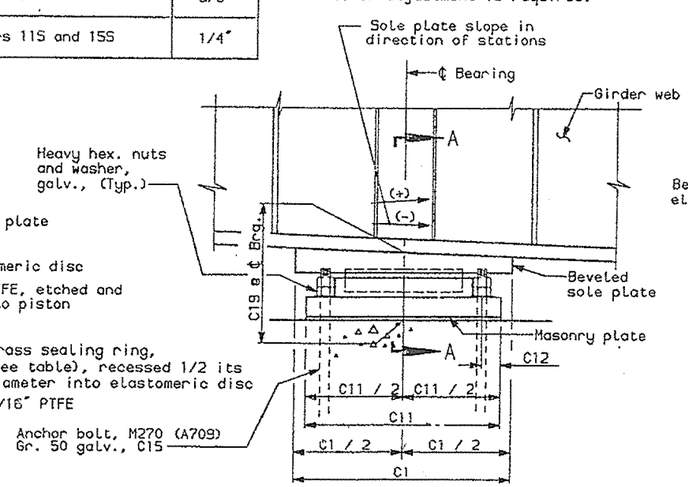

ELEVATION
FIXED BEARING
(At 45° F.)

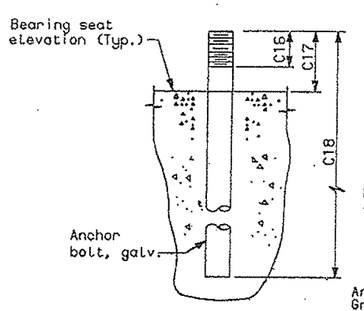

ANCHOR BOLT DETAIL

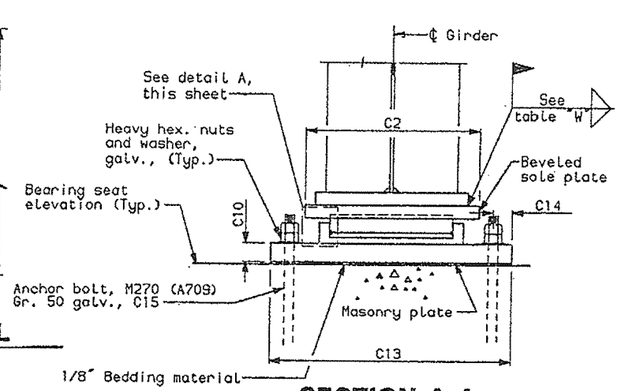

SECTION A-A

DESIGN-DETAILED	NCI	GLH, DTP	6-94
CHECKED		FDB	6-94
REVISION			
FIELD CHANGES			

PLANS

sa.brg1

SOUTH APPROACH

STATE OF MAINE
DEPARTMENT OF TRANSPOR

PORTLAND - S. PORTLA
OVER FORE RIV
CUMBERLAND CO

POT BEARIN
DETAILS -

GUIDED EXPANSION BEARINGS

Location	Quantity	Beveled sole plate A1	Beveled sole plate A2	Beveled sole plate A3	Slope %	Guide plate L x W	Guide plate A4	Guide plate A5	Piston plate H x ø	Piston plate A6	Elastomeric disc H x ø	Brass sealing ring
S. Abut.	5	1'-11"	2'-7"	1 3/4"	+2.300	1'-2" x 1'-2"	1 5/8"	5/8"	2 1/4" x 11.595"ø	5/8"	7/8" x 11 5/8"ø	3/16"ø
Pier 1S	5	2'-4 1/2"	3'-3"	1 3/4"	+2.2914	1'-8 3/4" x 1'-8 3/4"	1 5/8"	5/8"	2 5/8" x 18.095"ø	5/8"	1 1/4" x 18 1/8"ø	3/8"ø
Pier 3S	5	2'-4 1/2"	3'-3"	1 3/4"	+1.9961	1'-8 5/8" x 1'-6 5/8"	1 5/8"	5/8"	2 5/8" x 18.095"ø	5/8"	1 1/4" x 18 1/8"ø	3/8"ø
Pr.4S Bak.	5	1'-10 1/2"	2'-6"	1 5/8"	+1.8498	1'-1 5/8" x 1'-1 5/8"	1 1/2"	1/2"	1 7/8" x 11.345"ø	1/2"	7/8" x 11 3/8"ø	3/16"ø
Pr.4S Ahd.	4	2'-1 1/2"	2'-5"	1 7/8"	+1.8470	1'-2 1/8" x 1'-2 1/8"	1 1/2"	1/2"	1 7/8" x 11.845"ø	1/2"	7/8" x 11 7/8"ø	3/16"ø
Pier 5S	4	3'-0"	3'-3"	1 3/4"	+1.7756	1'-7" x 1'-7"	1 5/8"	5/8"	2 5/8" x 18.470"ø	5/8"	1 1/4" x 18 1/2"ø	3/8"ø
Pier 6S	4	2'-3 1/2"	2'-11"	1 7/8"	+1.7756	1'-7 1/2" x 1'-7 1/2"	1 3/4"	11/16"	2 3/4" x 17.095"ø	11/16"	1 1/4" x 17 1/8"ø	5/16"ø
Pier 8S	4	2'-6"	3'-3"	1 3/4"	+1.7756	1'-9 1/2" x 1'-9 1/2"	1 5/8"	5/8"	2 5/8" x 18.970"ø	5/8"	1 3/8" x 19"ø	3/8"ø
Pr.9S Bak.	4	1'-9 1/2"	2'-6"	1 5/8"	+1.7756	1'-2" x 1'-2"	1 1/2"	1/2"	1 7/8" x 11.720"ø	1/2"	7/8" x 11 5/8"ø	3/16"ø
Pr.9S Ahd.	4	1'-11"	2'-3"	1 5/8"	+1.7756	1'-2" x 1'-2"	1 1/2"	1/2"	1 7/8" x 11.720"ø	1/2"	7/8" x 11 3/4"ø	3/16"ø
Pier 10S	4	2'-6"	3'-3"	1 3/4"	+1.7756	1'-9 5/8" x 1'-9 5/8"	1 5/8"	5/8"	2 5/8" x 19.095"ø	5/8"	1 3/8" x 19 1/8"ø	3/8"ø
Pier 12S	4	2'-6"	3'-3"	1 3/4"	+1.7756	1'-9 5/8" x 1'-9 5/8"	1 5/8"	5/8"	2 5/8" x 19.095"ø	5/8"	1 3/8" x 19 1/8"ø	3/8"ø
Pr.13S Bak	4	1'-11 1/2"	2'-3"	1 5/8"	+1.7756	1'-2" x 1'-2"	1 1/2"	1/2"	1 7/8" x 11.720"ø	1/2"	7/8" x 11 3/4"ø	3/16"ø
Pr.13S Ahd	5	1'-11 1/2"	2'-3"	1 5/8"	+1.7756	1'-2" x 1'-2"	1 1/2"	1/2"	1 7/8" x 11.720"ø	1/2"	7/8" x 11 5/8"ø	3/16"ø
Pier 14S	5	2'-6"	3'-1"	1 5/8"	+1.7756	1'-9 1/8" x 1'-9 1/8"	1 1/2"	9/16"	2 1/2" x 18.595"ø	9/16"	1 1/4" x 18 5/8"ø	3/8"ø
Pier 16S	5	2'-5"	3'-1"	1 5/8"	+1.4384	1'-9 3/8" x 1'-9 3/8"	1 1/2"	1/2"	2 3/8" x 18.845"ø	1/2"	1 3/8" x 18 7/8"ø	3/8"ø
S.Bas.Pr.	5	1'-10"	2'-1"	1 3/4"	+0.7167	1'-1 3/8" x 1'-1 3/8"	1 5/8"	5/8"	2 1/8" x 11.095"ø	5/8"	3/4" x 11 1/8"ø	3/16"ø

Location	Pot plate L x W	Pot plate A7	Pot plate A8	Pot plate A9	Pot plate A10
S. Abut.	1'-1 1/8" x 1'-1 1/8"	3.0000"	3/4"	3/4"	11 5/8"ø
Pier 1S	1'-7 7/8" x 1'-7 7/8"	3.7500"	7/8"	7/8"	18 1/8"ø
Pier 3S	1'-7 7/8" x 1'-7 7/8"	3.7500"	7/8"	7/8"	18 1/8"ø
Pr.4S Bak.	1'-0 7/8" x 1'-0 7/8"	2.7500"	3/4"	3/4"	11 3/8"ø
Pr.4S Ahd.	1'-1 3/8" x 1'-1 3/8"	2.7500"	3/4"	3/4"	11 7/8"ø
Pier 5S	1'-8 1/4" x 1'-8 1/4"	3.7500"	7/8"	7/8"	18 1/2"ø
Pier 6S	1'-6 3/4" x 1'-6 3/4"	3.6250"	13/16"	13/16"	17 1/8"ø
Pier 8S	1'-8 3/4" x 1'-8 3/4"	3.8750"	7/8"	7/8"	19"ø
Pr.9S Bak.	1'-1 1/4" x 1'-1 1/4"	2.7500"	3/4"	3/4"	11 3/4"ø
Pr.9S Ahd.	1'-1 1/4" x 1'-1 1/4"	2.7500"	3/4"	3/4"	11 3/4"ø
Pier 10S	1'-8 7/8" x 1'-8 7/8"	3.8750"	7/8"	7/8"	19 1/8"ø
Pier 12S	1'-8 7/8" x 1'-8 7/8"	3.8750"	7/8"	7/8"	19 1/8"ø
Pr.13S Bak	1'-1 1/4" x 1'-1 1/4"	2.7500"	3/4"	3/4"	11 3/4"ø
Pr.13S Ahd	1'-1 1/4" x 1'-1 1/4"	2.7500"	3/4"	3/4"	11 3/4"ø
Pier 14S	1'-8 3/8" x 1'-8 3/8"	3.6250"	7/8"	7/8"	18 5/8"ø
Pier 16S	1'-8 5/8" x 1'-8 5/8"	3.7500"	7/8"	7/8"	18 7/8"ø
S.Bas.Pr.	1'-0 5/8" x 1'-0 5/8"	2.7500"	3/4"	3/4"	11 1/8"ø

Location	Masonry plate A11	Masonry plate A12	Masonry plate A13	Masonry plate A14	Masonry plate A15	Anchor Bolt A16	Anchor Bolt A17	Anchor Bolt A18	Anchor Bolt A19	1/8" Thick PTFE Horizontal plate	1/8" Thick PTFE Vertical plate	Depth A20
S. Abut.	2 1/4"	1'-4 1/2"	2 1/2"	3'-8"	2 1/2"	2"ø	9"	10"	30"	11 1/8"ø	1'-2" x 1 1/8"	0.7510'
Pier 1S	3 1/2"	2'-1"	3"	4'-6"	3"	2 1/2"ø	13"	14"	39"	17 5/8"ø	1'-8 3/4" x 1 1/8"	0.9281'
Pier 3S	4"	2'-1"	3"	4'-6"	3"	2 1/2"ø	14"	15"	39"	17 5/8"ø	1'-8 5/8" x 1 1/8"	0.9697'
Pr.4S Bak.	2 1/4"	1'-4 1/2"	2 1/2"	3'-7"	2 1/2"	2"ø	9"	10"	30"	10 7/8"ø	1'-1 5/8" x 1"	0.7197'
Pr.4S Ahd.	2 1/4"	1'-4 1/2"	2 1/2"	3'-7"	2 1/2"	2"ø	9"	10"	30"	11 3/8"ø	1'-2 1/8" x 1"	0.7197'
Pier 5S	3 1/2"	2'-1 1/2"	3"	4'-6"	3"	2 1/2"ø	13"	14"	39"	18"ø	1'-9" x 1 1/8"	0.9281'
Pier 6S	3 1/2"	2'-0"	3"	4'-2"	3"	2 1/2"ø	13"	14"	39"	16 5/8"ø	1'-7 1/2" x 1 1/4"	0.9385'
Pier 8S	3 1/2"	2'-2"	3"	4'-6"	3"	2 1/2"ø	13"	14"	39"	18 1/2"ø	1'-9 1/2" x 1 1/8"	0.9385'
Pr.9S Bak.	2"	1'-4"	2 1/2"	3'-7"	2 1/2"	2"ø	9"	10"	30"	11 1/4"ø	1'-2" x 1"	0.6989'
Pr.9S Ahd.	2"	1'-4"	2 1/2"	3'-4"	2 1/2"	2"ø	9"	10"	30"	11 1/4"ø	1'-2" x 1"	0.6989'
Pier 10S	3 3/4"	2'-2"	3"	4'-4"	3"	2 1/2"ø	13"	14"	39"	18 5/8"ø	1'-9 5/8" x 1 1/8"	0.9594'
Pier 12S	3 3/4"	2'-2"	3"	4'-4"	3"	2 1/2"ø	13"	14"	39"	18 5/8"ø	1'-9 5/8" x 1 1/8"	0.9594'
Pr.13S Bak	2"	1'-4"	2 1/2"	3'-4"	2 1/2"	2"ø	9"	10"	30"	11 1/4"ø	1'-2" x 1"	0.6989'
Pr.13S Ahd	2"	1'-4"	2 1/2"	3'-4"	2 1/2"	2"ø	9"	10"	30"	11 1/4"ø	1'-2" x 1"	0.6989'
Pier 14S	3 3/4"	2'-2"	3"	4'-4"	3"	2 1/2"ø	13"	14"	39"	18 1/8"ø	1'-9 1/8" x 1"	0.9333'
Pier 16S	3 3/4"	2'-2"	3"	4'-4"	3"	2 1/2"ø	13"	14"	39"	18 3/8"ø	1'-9 3/8 x 1 1/8"	0.9385'
S.Bas.Pr.	2"	1'-4"	3"	3'-4"	3"	2 1/2"ø	13"	14"	39"	10 5/8"ø	1'-1 1/4" x 1 1/8"	0.7094'

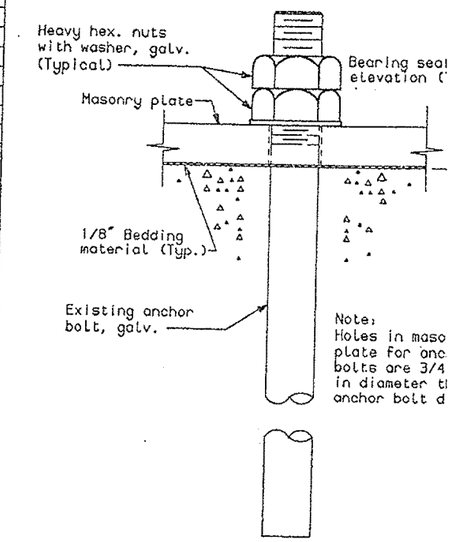

BEARING ANCHOR DETA

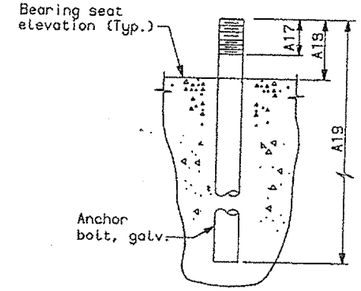

ANCHOR BOLT DETAIL

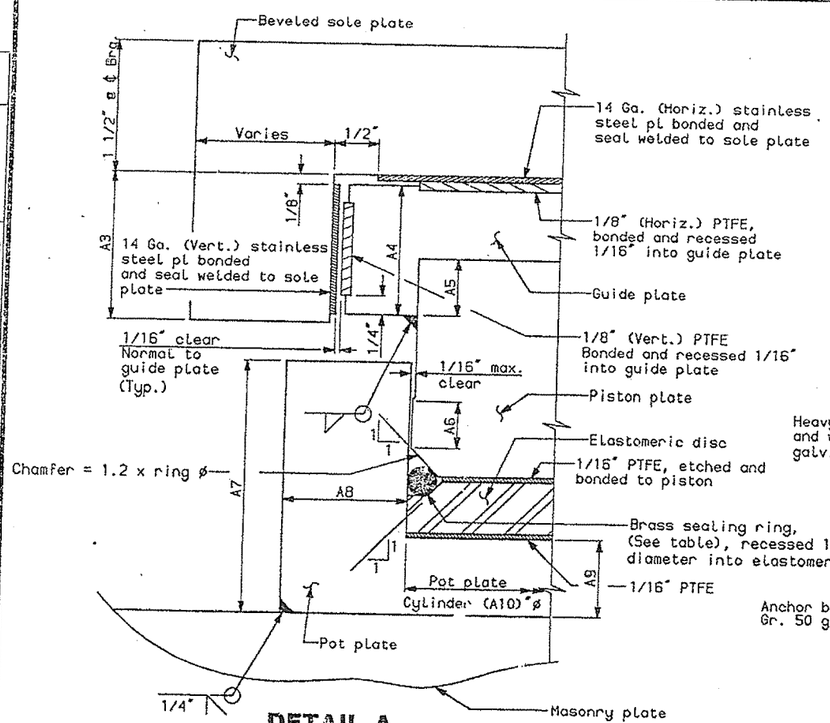

DETAIL A

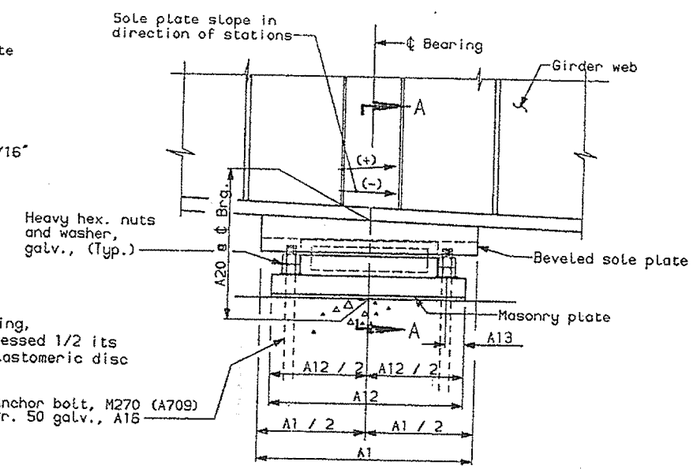

ELEVATION
GUIDED EXPANSION BEARING
(At 45° F.)

TABLE "W"

Location	Weld size
S. Abut., Piers 5S, 14S, 16S and South bascule pier	5/16"
Piers 1S, 3S, 6S, 8S, 10S and 12S	3/8"
Piers 4S (Back), 4S (Ahead), 9S (Back) 9S (Ahead), 13S (Back), 13S (Ahead)	1/4"

NOTES:

All structural steel shall be M270 (A709), Gr. 50, unless noted.

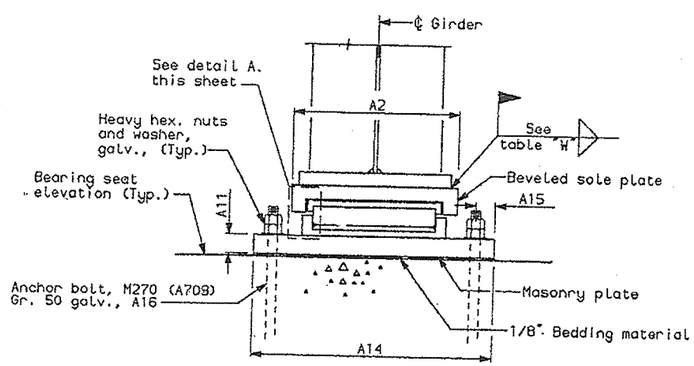

SECTION A-A

F.H.W.A. REG. NO.	STATE	PROJE
1	MAINE	DPI-

SOUTH APPROACH S
STATE OF MAINE
DEPARTMENT OF TRANSPOR

PORTLAND - S. PORTLAI
OVER FORE RIVI
CUMBERLAND COU

POT BEARIN
DETAILS - I

SHEET 108 OF 182 AUGUSTA, MAIN

DESIGN-DETAILED	MCI	DTP	6-94
CHECKED	PDB		6-94
REVISION			
FIELD CHANGES			

PLANS

sa.brg2

REG. NO.	STATE	PROJECT N
1	MAINE	DPI-0050

NON-GUIDED EXPANSION BEARINGS

Location		Quantity	Beveled sole plate		Slope	Piston plate		Elastomeric disc	Brass sealing	Pot plate				
Pier	Girder		B1	B2	%	H x ø	B5	H x ø	ring	L x W	B6	B7	B8	B9
S. Abut.	1,7	2	1'-11"	2'-7"	+2.3000	1 9/16" x 11.595"ø	5/8"	7/8" x 11 5/8"ø	3/16"ø	1'-1 1/8" x 1'-1 1/8"	3.0000"	3/4"	3/4"	11 5/8"ø
Pier 1S	1,7	2	2'-4 1/2"	3'-3"	+2.2914	2" x 18.095"ø	5/8"	1 1/4" x 18 1/8"ø	3/8"ø	1'-7 7/8" x 1'-7 7/8"	3.7500"	7/8"	7/8"	18 1/8"ø
Pier 2S	1,7	2	2'-9"	2'-9"	+2.1437	2 3/8" x 16.220"ø	1 5/16"	1 1/8" x 16 1/4"ø	5/16"ø	1'-5 3/4" x 1'-5 3/4"	4.0000"	3/4"	3/4"	16 1/4"ø
Pier 3S	1,7	2	2'-4 1/2"	3'-3"	+1.9961	1 15/16" x 18.095"ø	5/8"	1 1/4" x 18 1/8"ø	3/8"ø	1'-7 7/8" x 1'-7 7/8"	3.7500"	7/8"	7/8"	18 1/8"ø
Pr.4S Bak.	1,7	2	1'-10 1/2"	2'-6"	+1.8498	1 5/16" x 11.345"ø	1/2"	7/8" x 11 3/8"ø	3/16"ø	1'-0 7/8" x 1'-0 7/8"	2.7500"	3/4"	3/4"	11 3/8"ø
Pr.4S Ahd.	1,6	2	2'-1 1/2"	2'-5"	+1.8470	1 5/16" x 11.845"ø	1/2"	7/8" x 11 7/8"ø	3/16"ø	1'-1 3/8" x 1'-1 3/8"	2.7500"	3/4"	3/4"	11 7/8"ø
Pier 5S	1,6	2	3'-0"	3'-3"	+1.7756	1 15/16" x 18.470"ø	5/8"	1 1/4" x 18 1/2"ø	3/8"ø	1'-8 1/4" x 1'-8 1/4"	3.7500"	7/8"	7/8"	18 1/2"ø
Pier 6S	1,6	2	2'-3 1/2"	2'-11"	+1.7756	2" x 17.095"ø	11/16"	1 1/4" x 17 1/8"ø	5/16"ø	1'-6 3/4" x 1'-6 3/4"	3.6250"	13/16"	13/16"	17 1/8"ø
Pier 7S	1,6	2	2'-11"	2'-11"	+1.7756	2 1/4" x 17.470"ø	1"	1 1/4" x 17 1/2"ø	5/16"ø	1'-7" x 1'-7"	4.0000"	3/4"	7/8"	17 1/2"ø
Pier 8S	1,6	2	2'-6"	3'-3"	+1.7756	2" x 18.970"ø	5/8"	1 3/8" x 19"ø	3/8"ø	1'-8 3/4" x 1'-8 3/4"	3.8750"	7/8"	7/8"	19"ø
Pr.9S Bak.	1,6	2	1'-9 1/2"	2'-6"	+1.7756	1 5/16" x 11.720"ø	1/2"	7/8" x 11 5/8"ø	3/16"ø	1'-1 1/4" x 1'-1 1/4"	2.7500"	3/4"	3/4"	11 3/4"ø
Pr.9S Ahd.	1,6	2	1'-11"	2'-3"	+1.7756	1 5/16" x 11.720"ø	1/2"	7/8" x 11 3/4"ø	3/16"ø	1'-1 1/4" x 1'-1 1/4"	2.7500"	3/4"	3/4"	11 3/4"ø
Pier 10S	1,6	2	2'-6"	3'-3"	+1.7756	2" x 19.095"ø	5/8"	1 3/8" x 19 1/8"ø	3/8"ø	1'-8 7/8" x 1'-8 7/8"	3.8750"	7/8"	7/8"	19 1/8"ø
Pier 11S	1,6	2	2'-7"	2'-7"	+1.7756	1 7/8" x 17.220"ø	3/4"	1 1/8" x 17 1/4"ø	5/16"ø	1'-6 3/4" x 1'-6 3/4"	3.5000"	3/4"	3/4"	17 1/4"ø
Pier 12S	1,6	2	2'-6"	3'-3"	+1.7756	2" x 19.095"ø	5/8"	1 3/8" x 19 1/8"ø	3/8"ø	1'-8 7/8" x 1'-8 7/8"	3.8750"	7/8"	7/8"	19 1/8"ø
Pr.13S Bak	1,6	2	1'-11 1/2"	2'-3"	+1.7756	1 3/8" x 11.720"ø	1/2"	7/8" x 11 3/4"ø	3/16"ø	1'-1 1/4" x 1'-1 1/4"	2.7500"	3/4"	3/4"	11 3/4"ø
Pr.13S Ahd	1,7	2	1'-11 1/2"	2'-3"	+1.7756	1 3/8" x 11.720"ø	1/2"	7/8" x 11 5/8"ø	3/16"ø	1'-1 1/4" x 1'-1 1/4"	2.7500"	3/4"	3/4"	11 3/4"ø
Pier 14S	1,7	2	2'-6"	3'-1"	+1.7756	1 7/8" x 18.595"ø	9/16"	1 1/4" x 18 5/8"ø	3/8"ø	1'-8 3/8" x 1'-8 3/8"	3.6250"	7/8"	7/8"	18 5/8"ø
Pier 15S	1,7	2	2'-7"	2'-7"	+1.7756	1 7/8" x 16.845"ø	11/16"	1 1/8" x 16 7/8"ø	5/16"ø	1'-6 3/8" x 1'-6 3/8"	3.5000"	3/4"	3/4"	16 7/8"ø
Pier 16S	1,7	2	2'-5"	3'-1"	+1.4384	1 7/8" x 18.845"ø	1/2"	1 3/8" x 18 7/8"ø	3/8"ø	1'-8 5/8" x 1'-8 5/8"	3.7500"	7/8"	7/8"	18 7/8"ø
S.Bas.Pr.	1,7	2	1'-10"	2'-1"	+0.7167	1 1/2" x 11.095"ø	5/8"	3/4" x 11 1/8"ø	3/16"ø	1'-0 5/8" x 1'-0 5/8"	2.7500"	3/4"	3/4"	11 1/8"ø

Location	Masonry plate					Anchor bolt				1/8" Thick PTFE	14 Ga. stainless steel	Depth
	B10	B11	B12	B13	B14	B15	B16	B17	B18	Horizontal plate	Horizontal plate, S	B19
S. Abut.	2 1/4"	1'-4 1/2"	2 1/2"	3'-8"	2 1/2"	2"ø	9"	10"	30"	11 1/8"ø	15 1/8"	0.6103'
Pier 1S	3 1/2"	2'-1"	3"	4'-6"	3"	2 1/2"ø	13"	14"	39"	17 5/8"ø	21 5/8"	0.7927'
Pier 2S	3 1/2"	1'-10"	3 1/2"	4'-2"	3 1/2"	3 1/4"ø	13"	15"	48"	15 5/8"ø	19 5/8"	0.8031'
Pier 3S	4"	2'-1"	3"	4'-6"	3"	2 1/2"ø	14"	15"	39"	17 5/8"ø	21 5/8"	0.8291'
Pr.4S Bak.	2 1/4"	1'-4 1/2"	2 1/2"	3'-7"	2 1/2"	2"ø	9"	10"	30"	10 7/8"ø	14 7/8"	0.5895'
Pr.4S Ahd.	2 1/4"	1'-4 1/2"	2 1/2"	3'-7"	2 1/2"	2"ø	9"	10"	30"	11 3/8"ø	15 3/8"	0.5895'
Pier 5S	3 1/2"	2'-1 1/2"	3"	4'-6"	3"	2 1/2"ø	13"	14"	39"	18"ø	22"	0.7874'
Pier 6S	3 1/2"	2'-0"	3"	4'-2"	3"	2 1/2"ø	13"	14"	39"	16 5/8"ø	20 5/8"	0.7875'
Pier 7S	3 3/4"	2'-0 1/2"	3 1/2"	4'-3"	3 1/2"	3"ø	13"	15"	45"	16 7/8"ø	20 7/8"	0.8344'
Pier 8S	3 1/2"	2'-2"	3"	4'-6"	3"	2 1/2"ø	13"	14"	39"	18 1/2"ø	22 1/2"	0.8031'
Pr.9S Bak.	2"	1'-4"	2 1/2"	3'-7"	2 1/2"	2"ø	9"	10"	30"	11 1/4"ø	15 1/4"	0.5687'
Pr.9S Ahd.	2"	1'-4"	2 1/2"	3'-4"	2 1/2"	2"ø	9"	10"	30"	11 1/4"ø	15 1/4"	0.5687'
Pier 10S	3 3/4"	2'-2"	3"	4'-4"	3"	2 1/2"ø	13"	14"	39"	18 5/8"ø	22 5/8"	0.8239'
Pier 11S	3 3/4"	1'-11 1/2"	3"	3'-10"	3"	2 1/2"ø	13"	14"	39"	16 5/8"ø	20 5/8"	0.7823'
Pier 12S	3 3/4"	2'-2"	3"	4'-4"	3"	2 1/2"ø	13"	14"	39"	18 5/8"ø	22 5/8"	0.8239'
Pr.13S Bak	2"	1'-4"	2 1/2"	3'-4"	2 1/2"	2"ø	9"	10"	30"	11 1/4"ø	15 1/4"	0.5739'
Pr.13S Ahd	2"	1'-4"	2 1/2"	3'-4"	2 1/2"	2"ø	9"	10"	30"	11 1/4"ø	15 1/4"	0.5739'
Pier 14S	3 3/4"	2'-2"	3"	4'-4"	3"	2 1/2"ø	13"	14"	39"	18 1/8"ø	22 1/8"	0.8031'
Pier 15S	3 1/2"	1'-11"	3"	3'-10"	3"	2 1/2"ø	13"	14"	39"	16 1/4"ø	20 1/4"	0.7614'
Pier 16S	3 3/4"	2'-2"	3"	4'-4"	3"	2 1/2"ø	13"	14"	39"	18 3/8"ø	22 3/8"	0.8135'
S.Bas.Pr.	2"	1'-4"	3"	3'-4"	3"	2 1/2"ø	13"	14"	39"	10 5/8"ø	14 5/8"	0.5739'

TABLE "W"

Location	Weld size
S. Abut., Piers 5S, 14S, 16S and South bascule pier	5/16"
Piers 1S, 2S, 3S, 6S, 7S, 8S, 10S, 11S, 12S and 15S	3/8"
Piers 4S (Back), 4S (Ahead), 9S (Back) 9S (Ahead), 13S (Back), 13S (Ahead)	1/4"

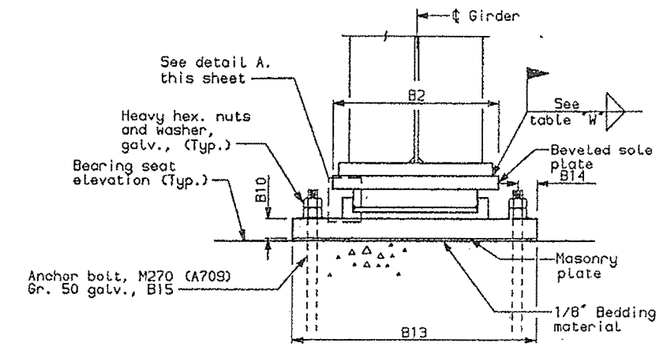

SECTION A-A

NOTE:

All structural steel shall be M270 (A709), Gr. 50, unless noted.

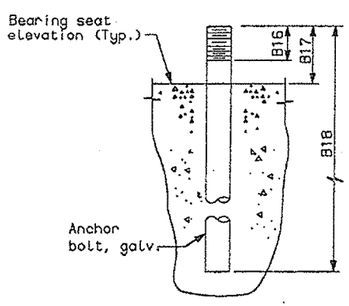

ANCHOR BOLT DETAIL

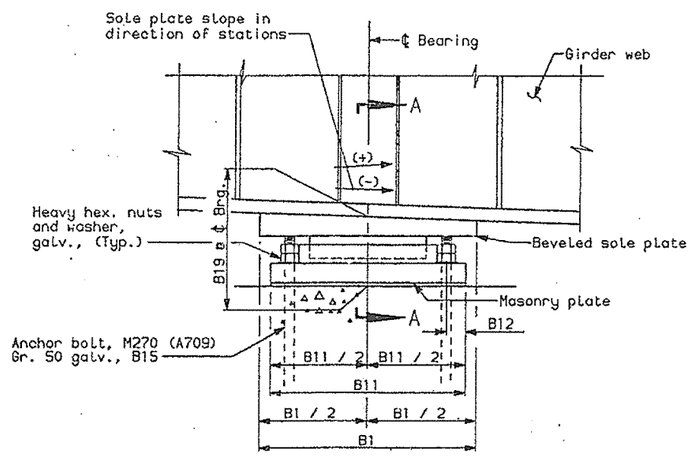

ELEVATION
NON-GUIDED EXPANSION BEARING

(At 45°F.)

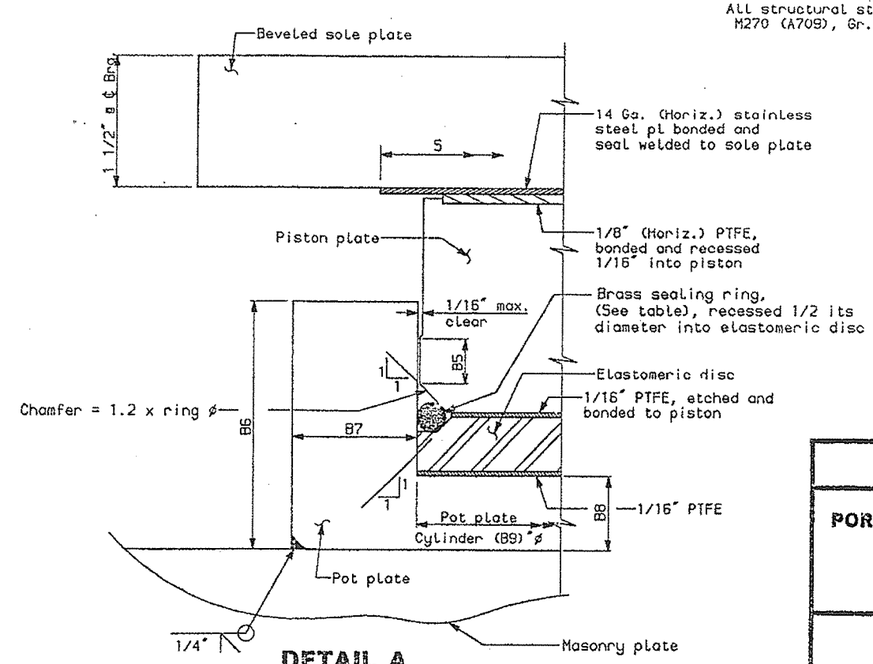

DETAIL A

SOUTH APPROACH

STATE OF MAINE
DEPARTMENT OF TRANSPO

PORTLAND - S. PORTLA
OVER FORE RIV
CUMBERLAND CO

POT BEARIN
DETAILS - I

SHEET 109 OF 182 AUGUSTA, MA

DESIGN-DETAILED	MCI	SLH, DTP	6-94
CHECKED		PDG	6-94
REVISION			
FIELD CHANGES			

PLANS

sa.br93

REG. NO.	STATE	PROJECT NO.
1	MAINE	DPI-0068(0

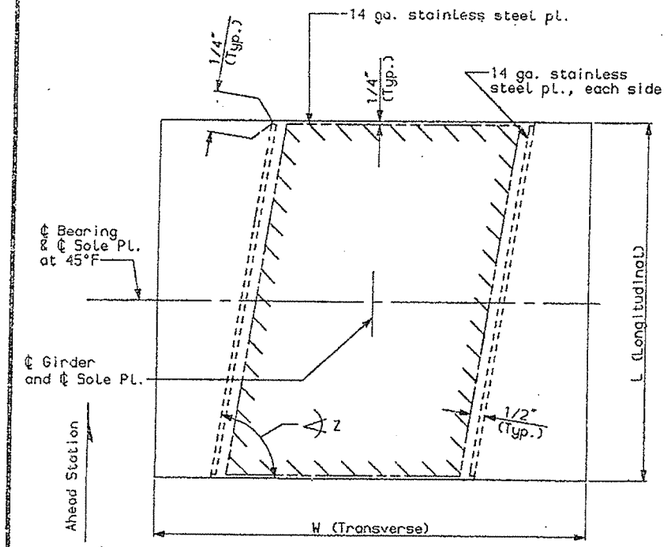

PLAN - BEVELED SOLE PLATE GUIDED EXPANSION BEARING

(Interior girders, typical)
S. Abut, Piers 1S, 4S ahead, 5S, 6S,
9S back, 12S, 13S back, 16S S. Bascule Pier.

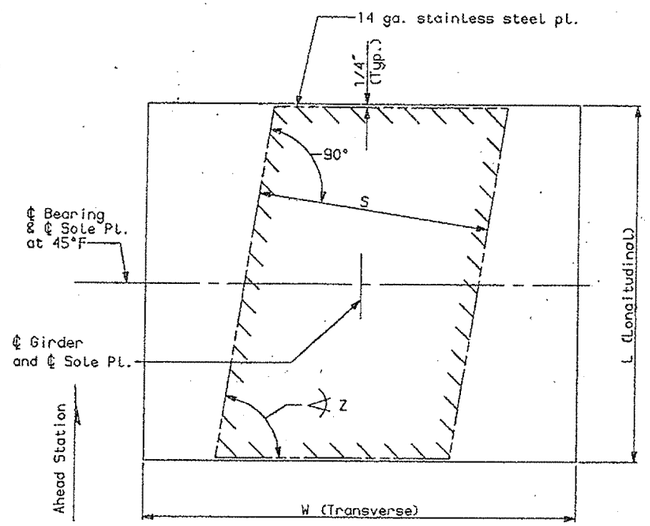

PLAN - BEVELED SOLE PLATE NON-GUIDED EXPANSION BEARING

(Exterior girders, typical)
S. Abut, Piers 1S, 4S ahead, 5S, 6S,
9S back, 12S, 13S back, 16S S. Bascule Pier.

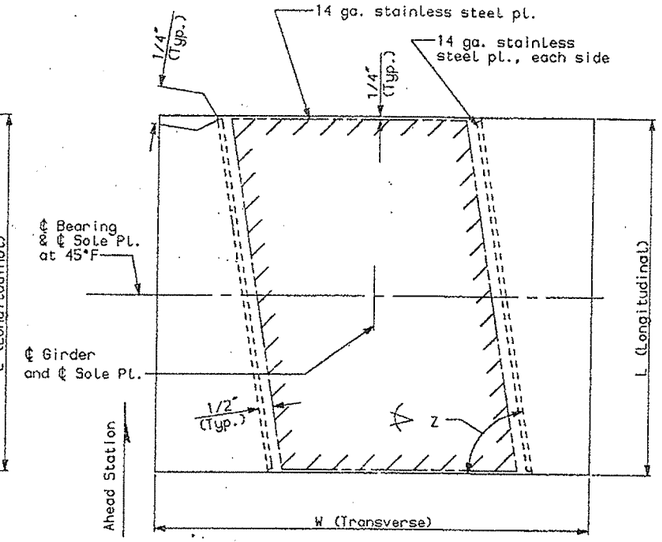

PLAN - BEVELED SOLE PLATE GUIDED EXPANSION BEARING

(Interior girders, typical)
Piers 3S, 4S back, 8S, 9S ahead
10S, 13S ahead & 14S.

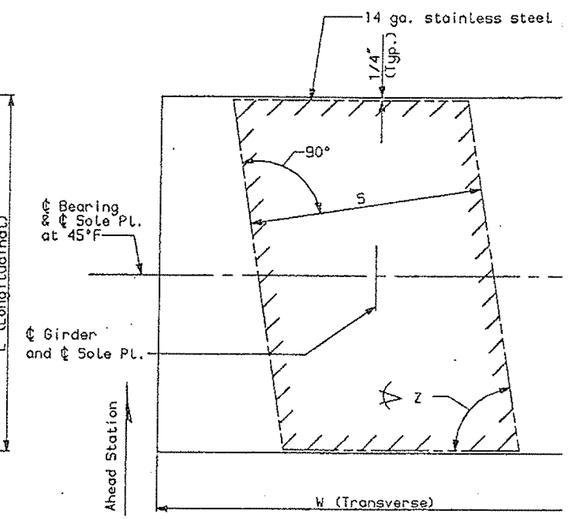

PLAN - BEVELED SOLE PLATE NON-GUIDED EXPANSION BEARI

(Exterior girders, typical)
Piers 3S, 4S back, 8S, 9S ahead
10S, 13S ahead & 14S.

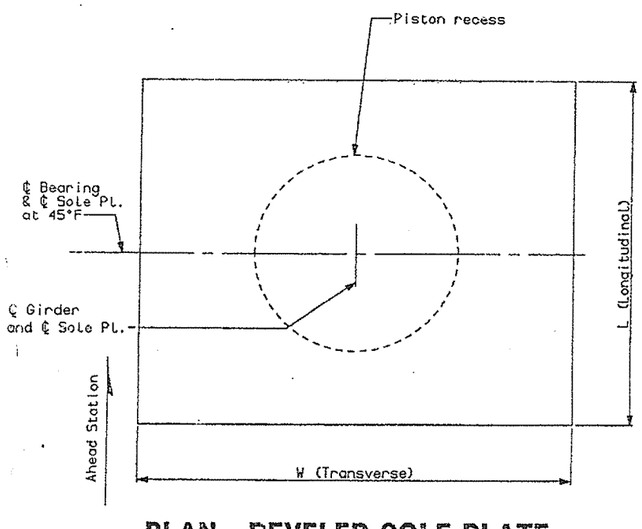

PLAN - BEVELED SOLE PLATE FIXED BEARING

(Interior girders, typical)
Piers 2S, 7S, 11S & 15S.

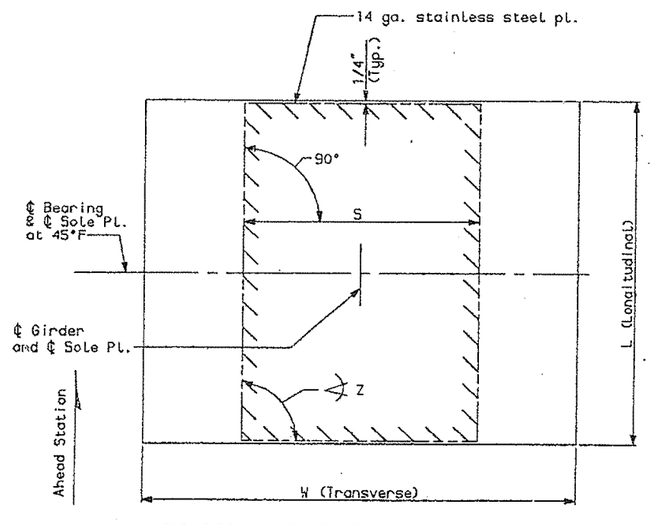

PLAN - BEVELED SOLE PLATE NON-GUIDED EXPANSION BEARING

(Exterior girders)
Piers 2S, 7S, 11S and 15S

BEVELED SOLE PLATES

Location	L	W	Z (Typ. u.n.)	Girder 4	Girder 5	Girder 6	Girder 7
S. Abut.	1'-11"	2'-7"	79.877°	-	-	-	-
Pier 1S	2'-4 1/2"	3'-3"	81.143°	81.399°	81.649°	81.643°	81.637°
Pier 2S	2'-9"	2'-9"	90.000°	-	-	-	-
Pier 3S	2'-4 1/2"	3'-3"	81.143°	80.706°	80.278°	80.287°	80.295°
Pr.4S Bak.	1'-10 1/2"	2'-6"	79.874°	79.898°	79.854°	79.854°	79.854°
Pr.4S Ahd.	2'-1 1/2"	2'-5"	74.831°	-	-	-	-
Pier 5S	3'-0"	3'-3"	76.718°	-	-	-	-
Pier 6S	2'-3 1/2"	2'-11"	78.900°	-	-	-	-
Pier 7S	2'-11"	2'-11"	90.000°	-	-	-	-
Pier 8S	2'-6"	3'-3"	89.912°	-	-	-	-
Pr.9S Bak.	1'-9 1/2"	2'-6"	86.403°	-	-	-	-
Pr.9S Ahd.	1'-11"	2'-3"	78.631°	-	-	-	-
Pier 10S	2'-6"	3'-3"	80.051°	-	-	-	-
Pier 11S	2'-7"	2'-7"	90.000°	-	-	-	-
Pier 12S	2'-6"	3'-3"	80.051°	-	-	-	-
Pr.13S Bak	1'-11 1/2"	2'-3"	78.631°	-	-	-	-
Pr.13S Ahd	1'-11 1/2"	2'-3"	77.858°	-	-	-	-
Pier 14S	2'-6"	3'-1"	82.385°	-	-	-	-
Pier 15S	2'-7"	2'-7"	90.000°	-	-	-	-
Pier 16S	2'-5"	3'-1"	82.480°	81.991°	81.392°	81.378°	81.363°
S.Bas.Pr.	1'-10"	2'-1"	83.932°	-	-	-	-

Note: Tabulated data typical per line of bearings unless noted otherwise.

NOTE:

All structural steel shall be M270 (A709), Gr. 50, unless noted.

CHECKED	REVISION
PDB	FIELD CHANGES

PLANS

6-94

SOUTH APPROACH SP

STATE OF MAINE
DEPARTMENT OF TRANSPORTA

PORTLAND - S. PORTLAND
OVER FORE RIVER
CUMBERLAND COUN

POT BEARING
DETAILS - IV

SHEET 110 OF 182 AUGUSTA, MAINE

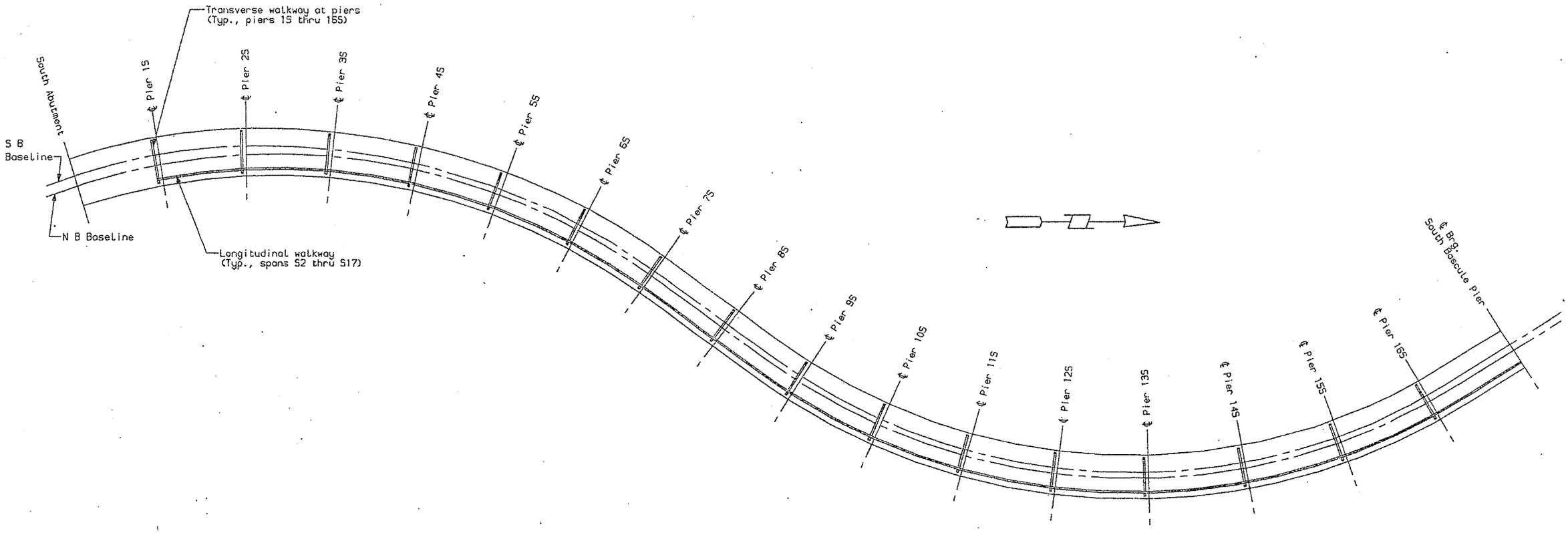

PLAN - SOUTH APPROACH

PLANS	CHECKED	MC	SLH
	REVISION	PDB	6-94
	FIELD CHANGES		

sa.walk-pl

SOUTH APPROACH

STATE OF MAINE
DEPARTMENT OF TRANSPOR

PORTLAND - S. PORTLA
OVER FORE RIV
CUMBERLAND CO

INSPECTION W
LOCATION PL

SHEET 111 OF 182 AUGUSTA, MAI

F.M.W.A. REG. NO.	STATE	PROJECT
1	MAINE	DPI-00

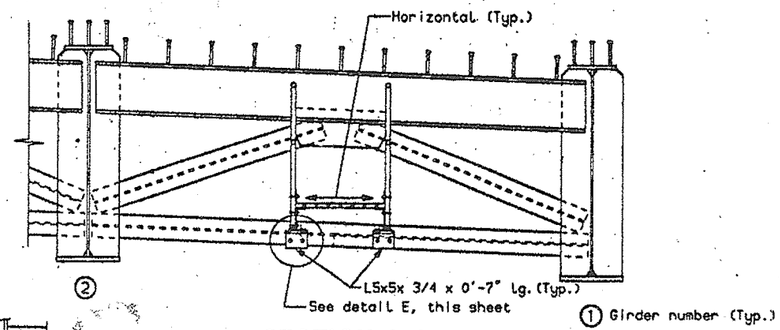

SECTION A-A

(At pier cross-frame)

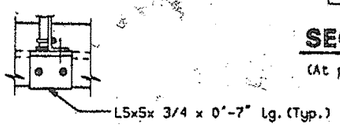

DETAIL E

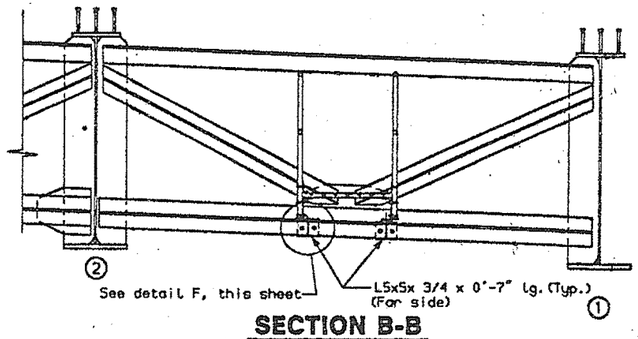

SECTION B-B

(At intermediate cross-frame)

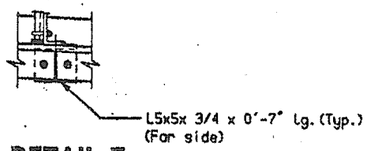

DETAIL F

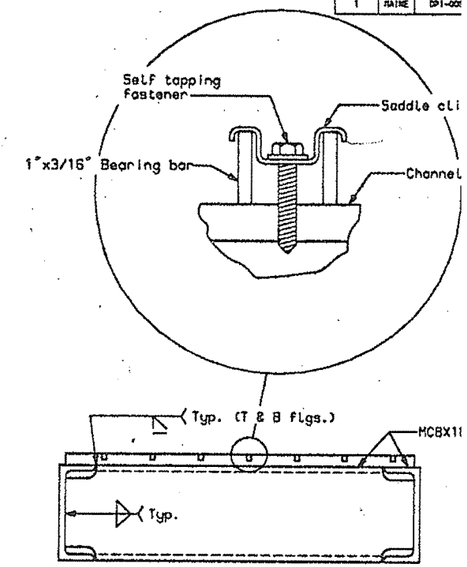

SECTION C-C

NOTES:

All walkway metalwork shall
M183, unless noted.
Ladders, Posts, and Railings
galvanized, A53.

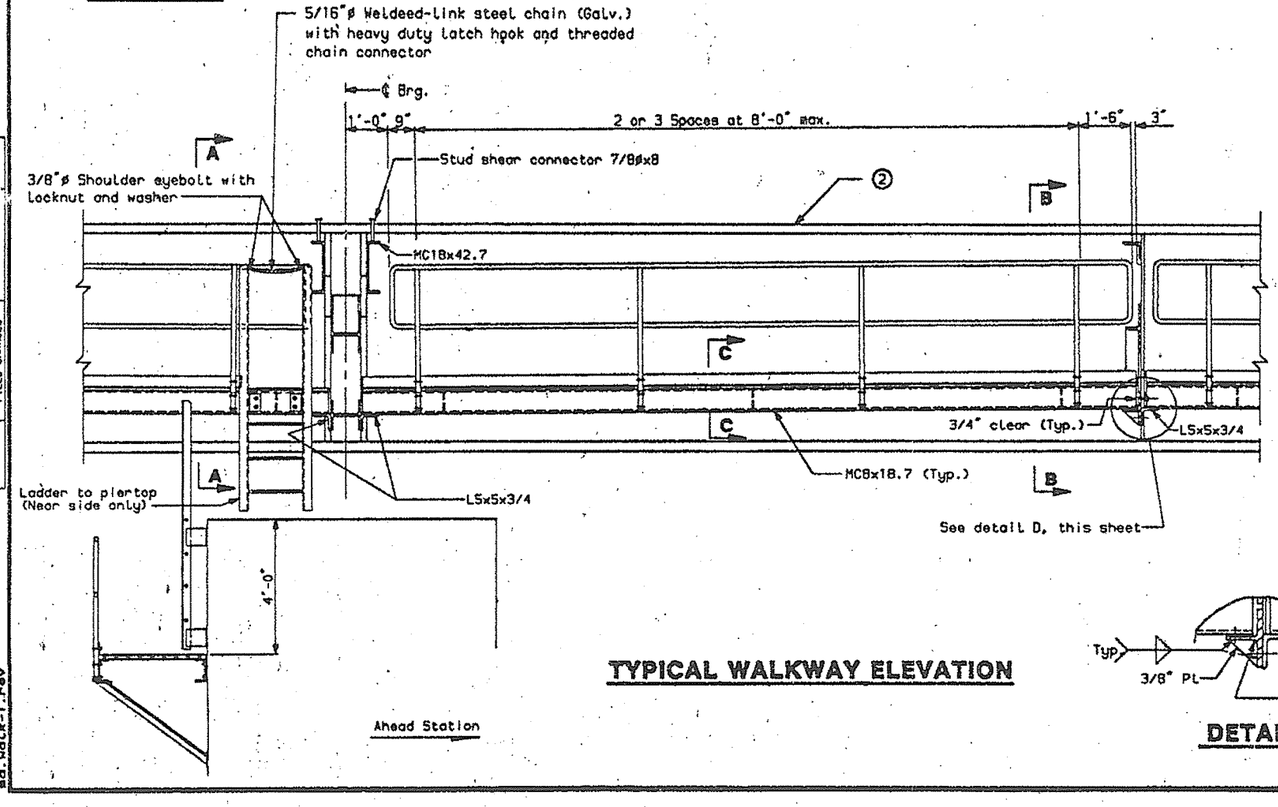

TYPICAL WALKWAY ELEVATION

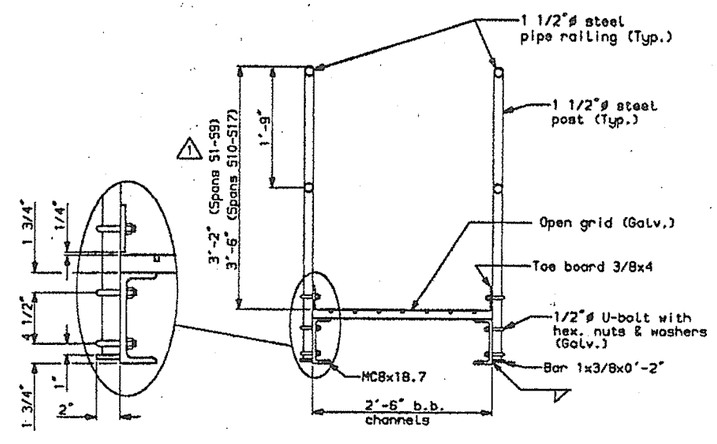

TYPICAL WALKWAY SECTION

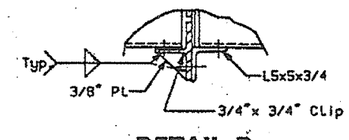

DETAIL D

⚠1 Sheet revised as of 1/19/95.

PRO	SIGN E			
PLANS	DESIGN-DETAILED	MCI	SL-ELS	6-94
	CHECKED	PDB		6-94
	REVISION	MCI		1-95
	FIELD CHANGES			

12-18-95

ma.walk-1.rev

SOUTH APPROACH

STATE OF MAINE
DEPARTMENT OF TRANSPO

PORTLAND - S. PORTLA
OVER FORE RI
CUMBERLAND CO

INSPECTION W
DETAILS -

SHEET 112 OF 182 AUGUSTA, MA

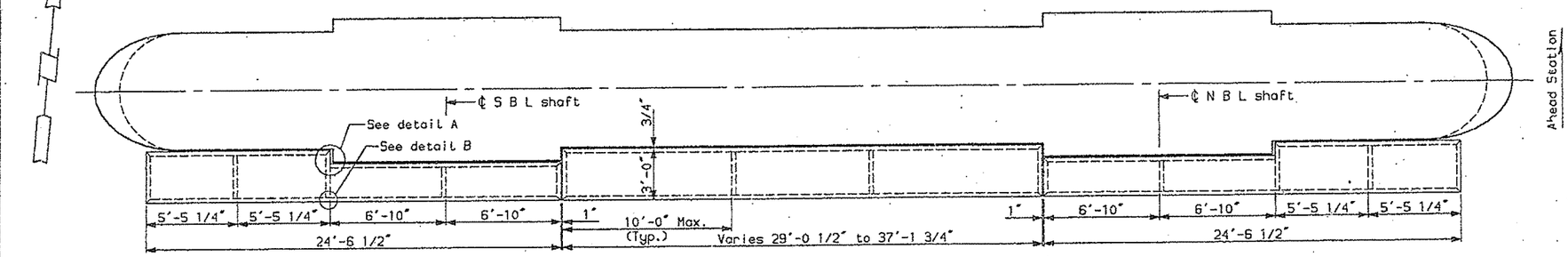

PLAN

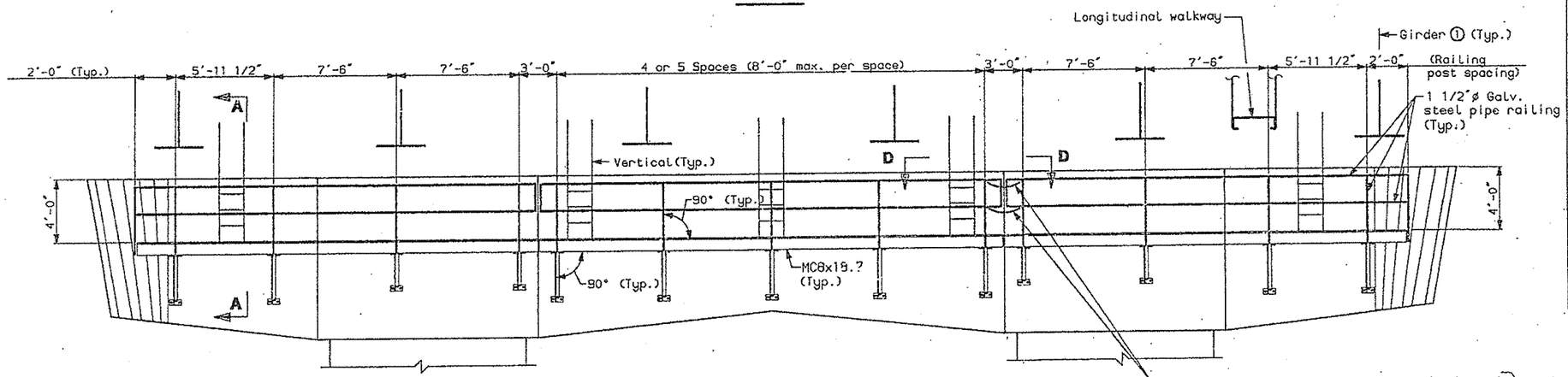

TYPICAL ELEVATION PIER TRANSVERSE WALKWAY

Looking ahead station
(Walkway parallels finished pier top elevation)

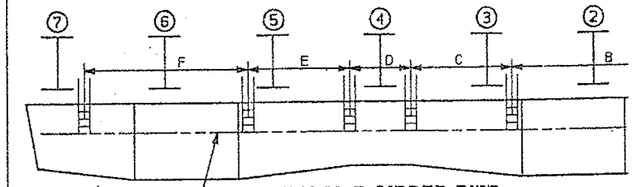

TYPICAL 7 GIRDER PIER

(Looking ahead station)

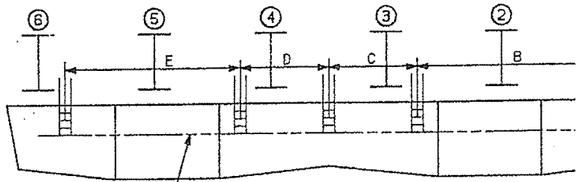

TYPICAL 6 GIRDER PIER

(Looking ahead station)

TABLE OF DIMENSIONS FOR PIER LADDERS

Pier No.	A	B	C	D	E
Typ. Pier*	3'-5 1/2"	No additional ladders required for typ. piers			
3S	3'-5 1/2"	21'-1"	10'-5 1/16"	6'-11"	10'-5 1/8
5S, 9S, & 13S	3'-5 1/2"	23'-3"	11'-0"	11'-0"	23'-3"
16S	3'-5 1/2"	19'-0"	12'-3 1/2"	6'-11"	12'-4 11/1

*Typical piers include all South approach piers not listed in table.

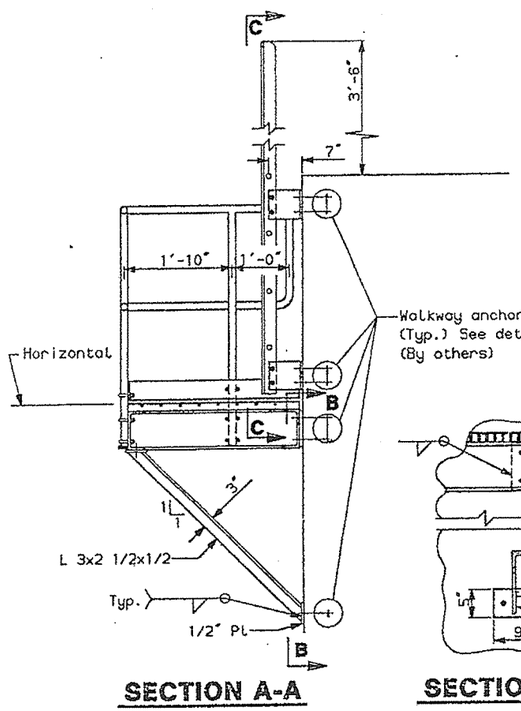

SECTION A-A

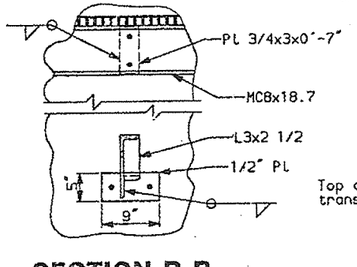

SECTION B-B

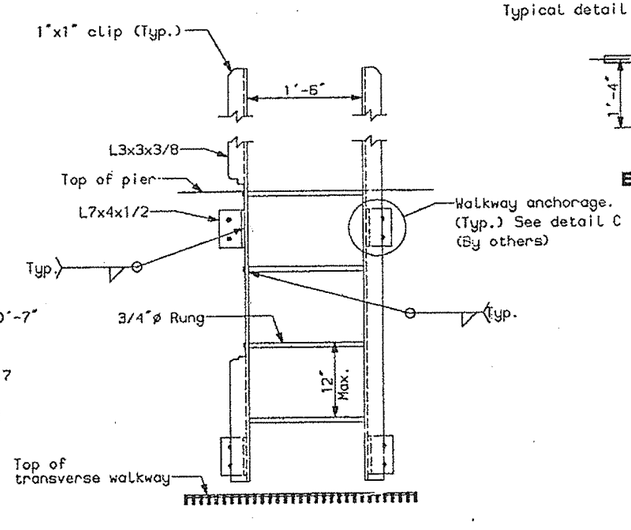

SECTION C-C

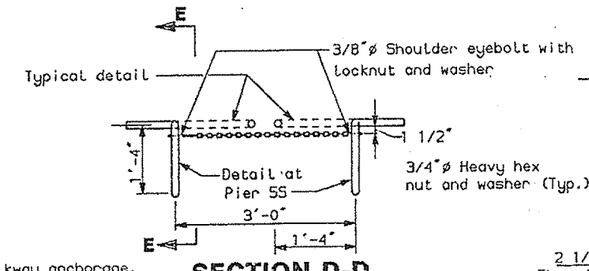

SECTION D-D

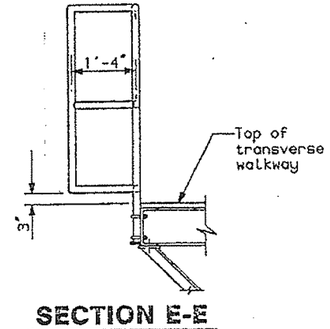

SECTION E-E

At Pier 5S, only

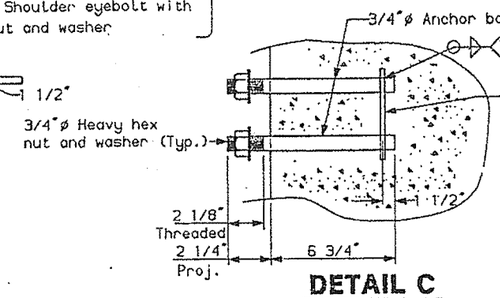

DETAIL C

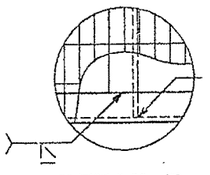

DETAIL B

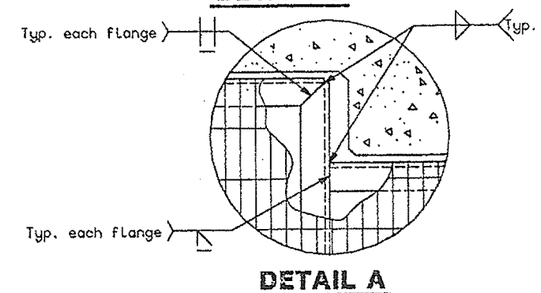

DETAIL A

NOTES:

Field verify all locations of walkway anchorages provided in the pier for support of the walkway prior to fabrication.

All walkway metalwork shall be galv. M18

Ladders, posts and railings shall be gal

PI	DESIGN	ER	BY	DATE
PLANS	DESIGN-DETAILED	MGT	SLH, ELS	6-94
	CHECKED		PDS	6-94
	REVISION			
	FIELD CHANGES			

2-8-94

sc.walk-2

SOUTH APPROAC

STATE OF MAI
DEPARTMENT OF TRANS

PORTLAND - S. PORTI
OVER FORE R
CUMBERLAND C

INSPECTION
DETAILS

SHEET 113 OF 182 AUGUSTA,

F.H.W.A. REG. NO.	STATE	PROJECT
1	MAINE	BPI-0069

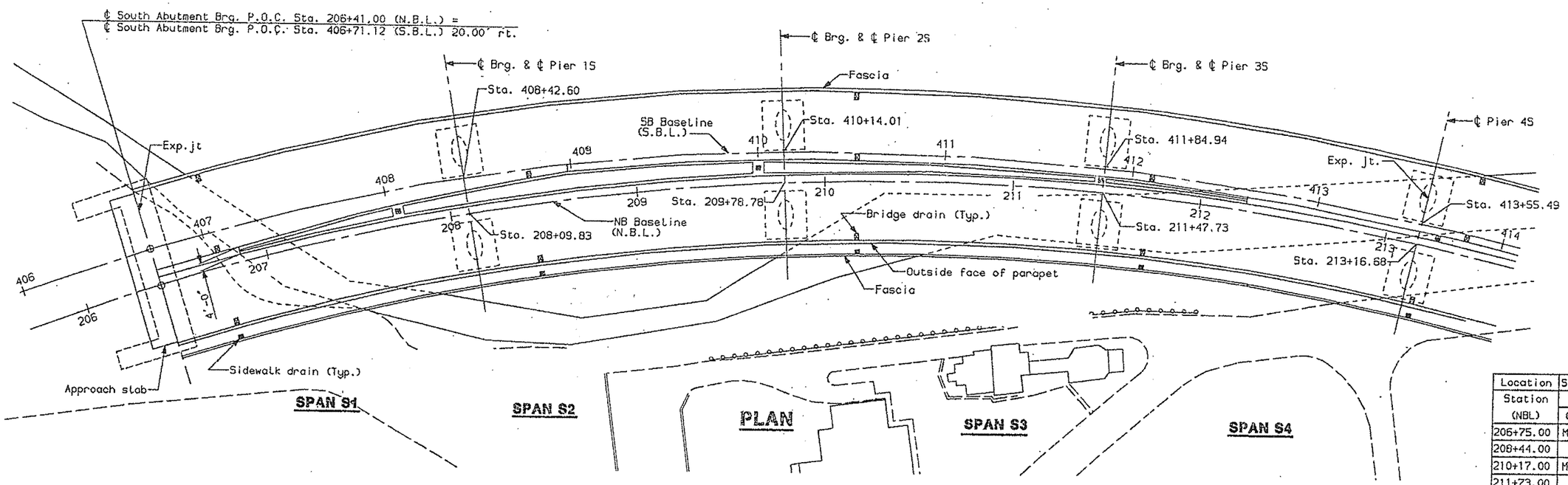

BRIDGE DRAIN TYPES

Location	Southbound Roadway		Northbound	
Station (NBL)	Shoulder		Shoulder	
	Outside	Median	Median	Outside
206+75.00	Modified	Standard	-	Standard
208+44.00	-	Standard	-	Standard
210+17.00	Modified	Standard	-	Standard
211+73.00	-	Standard	-	Standard
213+21.73	-	-	-	Standard
213+42.00	Modified	Modified	-	-

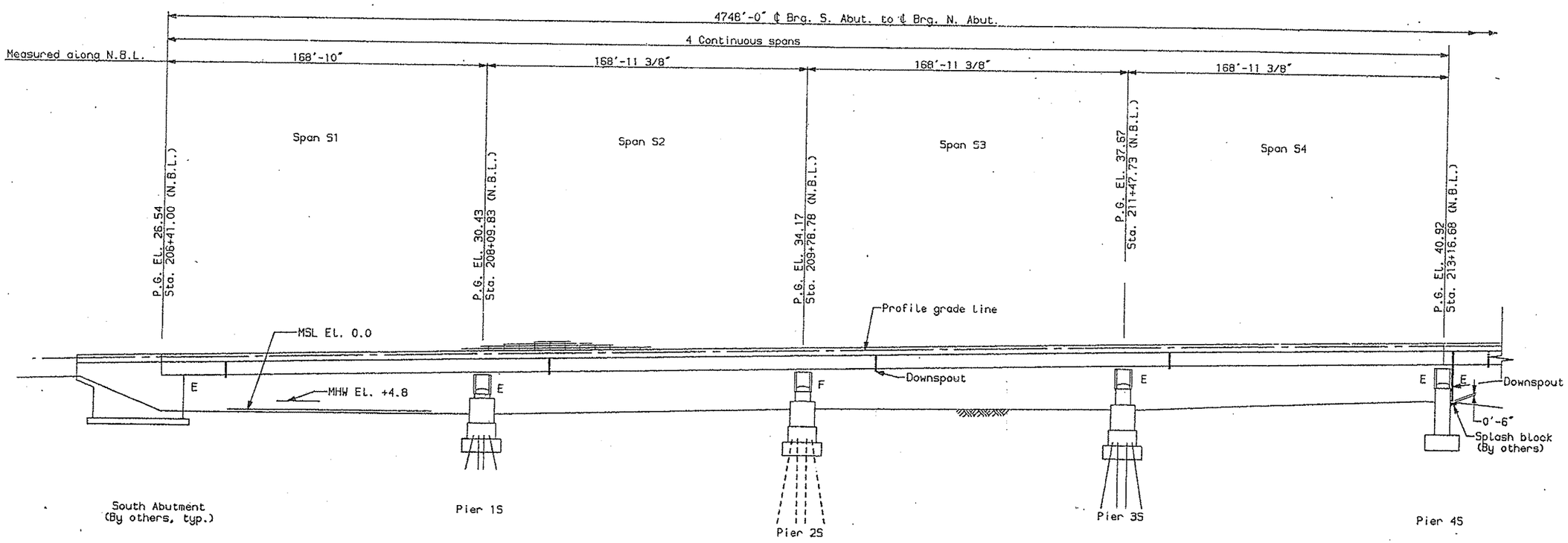

ELEVATION

PLANS	CHECKED	HCB	6-94
	REVISION		
	FIELD CHANGES		

3-20-94
sa.drain.pl1

SOUTH APPROACH S

STATE OF MAINE
DEPARTMENT OF TRANSPORT

PORTLAND - S. PORTLAN
OVER FORE RIVE
CUMBERLAND COU

SOUTH APPROA
DRAINAGE PLA

SHEET 114 OF 182 AUGUSTA, MAINE

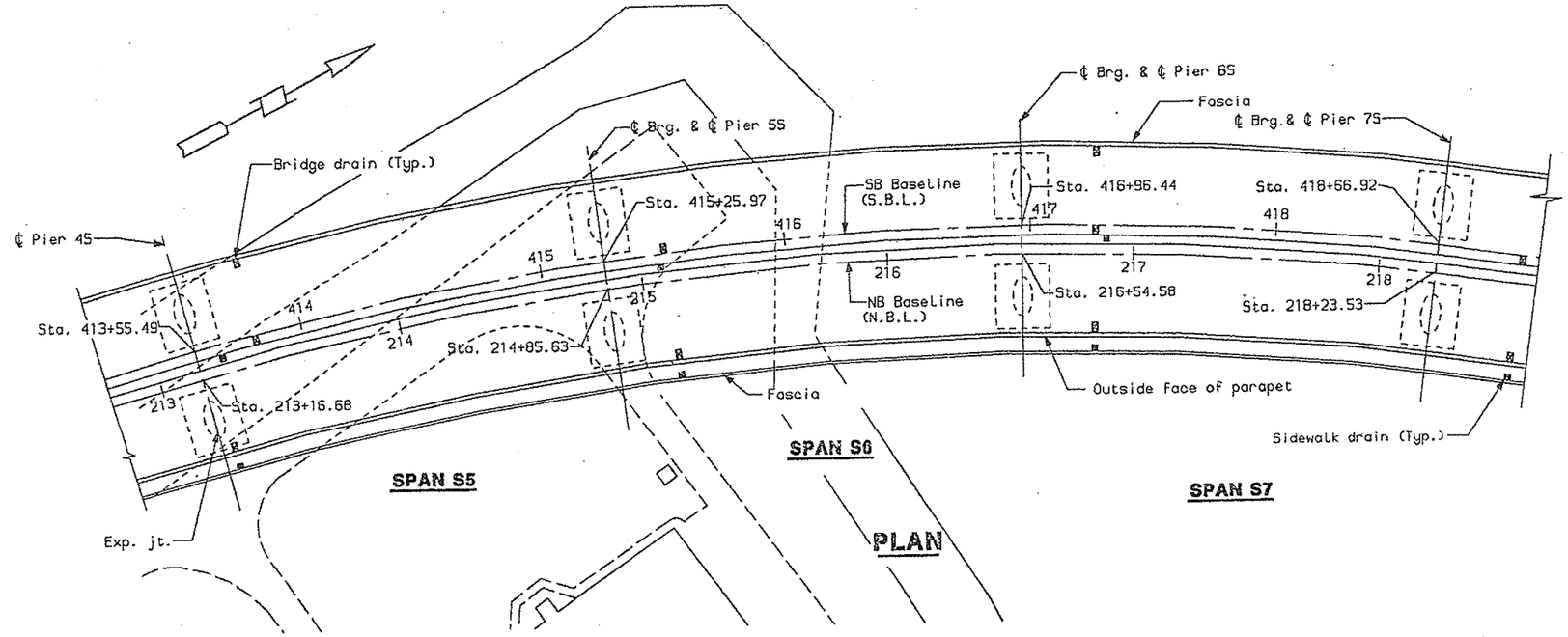

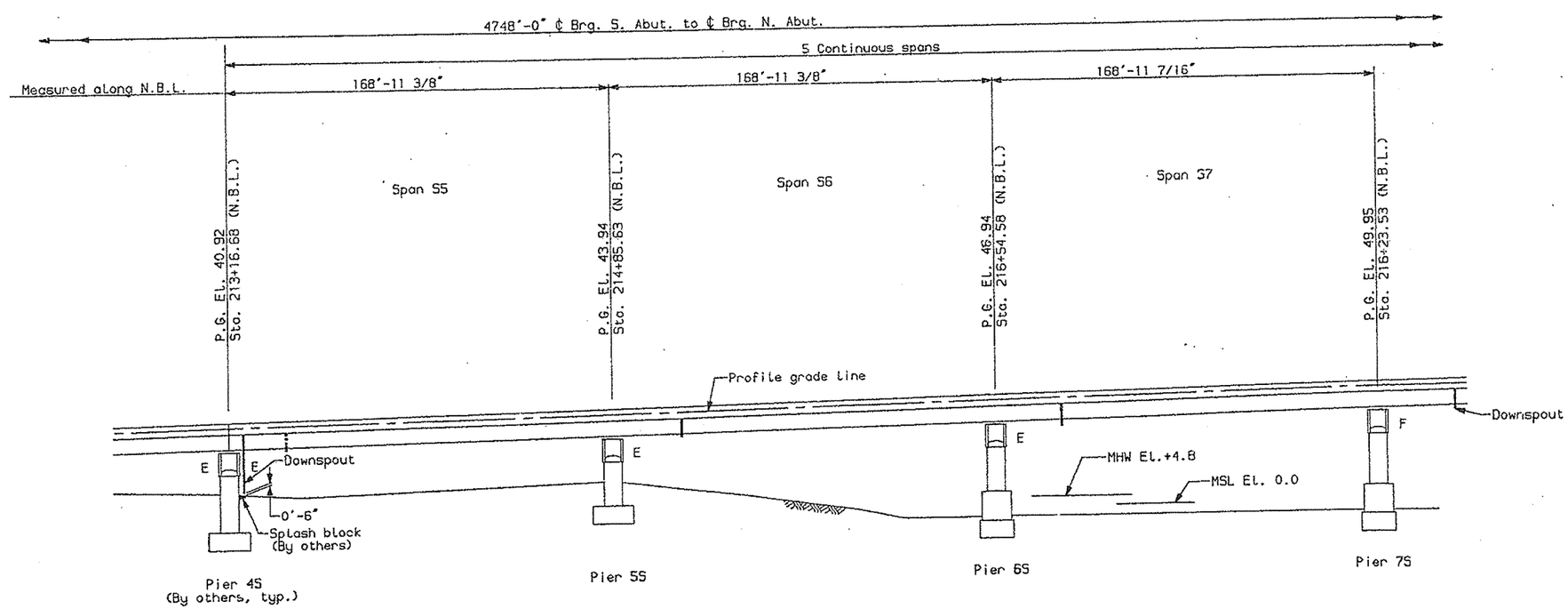

ELEVATION

BRIDGE DRAIN TYPES

Location	Southbound Roadway		Northbound Roadway		
Station	Shoulder		Shoulder		Sidewalk
(NBL)	Outside	Median	Median	Outside	Outside
213+21.73	-	-	-	Standard	Special
213+42.00	Modified	Modified	-	-	-
215+11.00	-	Modified	-	Standard	Special
216+89.00	Modified	Modified	-	Standard	Special
218+58.00	-	Modified	-	Standard	Special

PROJECT DESIGN ENGINEER	BY	DATE
DESIGN-DETAILED	MCB	6-94
CHECKED	MCB	6-94
REVISION		
FIELD CHANGES		

PLANS

3-20-94
sa.drain.pl2

SOUTH APPROAC
STATE OF MAI
DEPARTMENT OF TRANS

PORTLAND - S. PORT
OVER FORE
CUMBERLAND

SOUTH APP
DRAINAGE P

SHEET 115 OF 182 AUGUSTA,

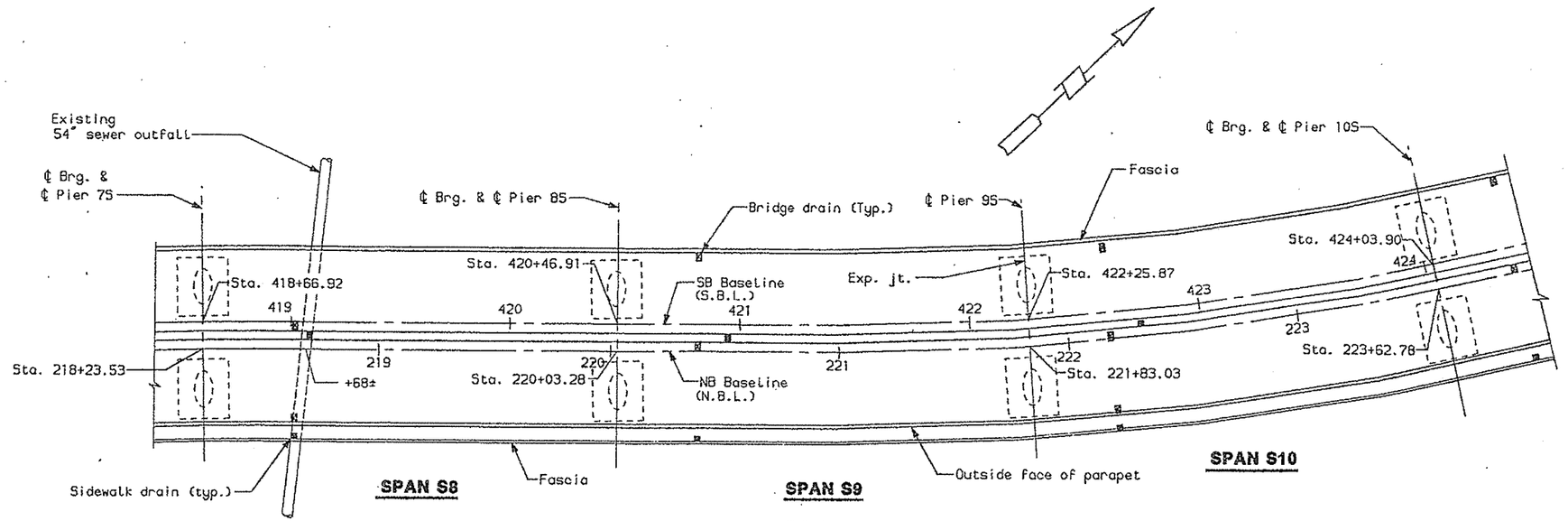

PLAN

BRIDGE DRAIN TYPES

Location	Southbound Roadway		Northbound R	
Station	Shoulder		Shoulder	
(NBL)	Outside	Median	Median	Outside
218+58.00	-	Modified	-	Standard
220+37.00	Modified	-	Standard	-
222+18.00	Modified	-	Standard	Standard
223+98.00	Modified	-	Standard	-

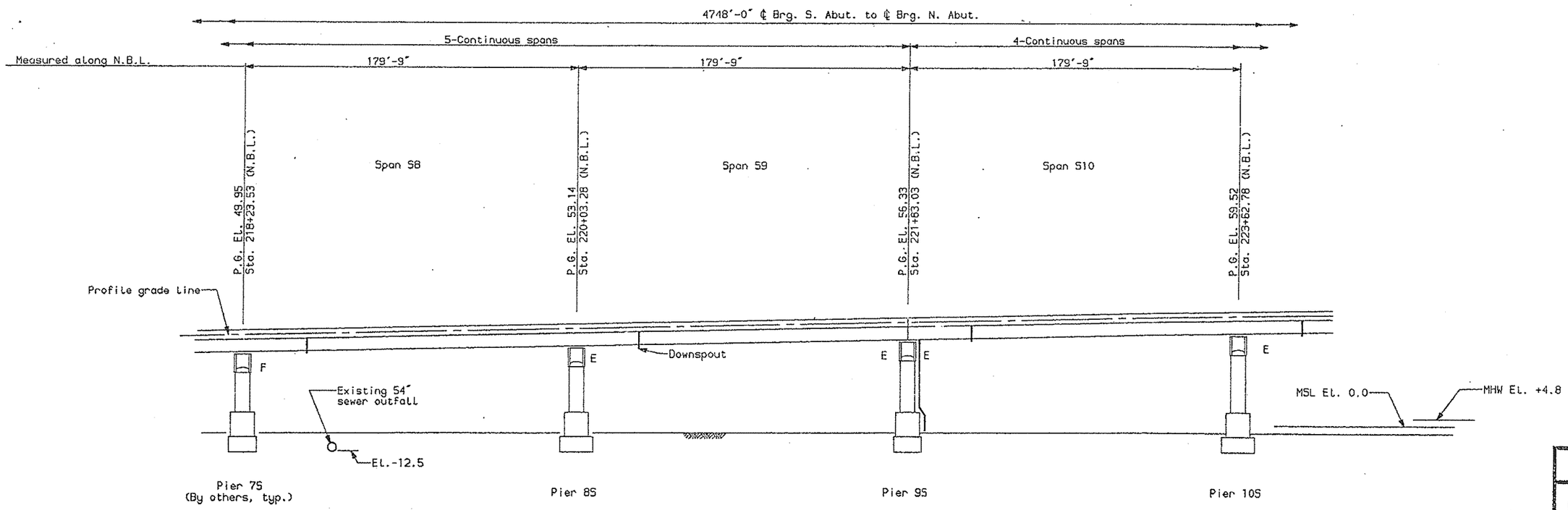

ELEVATION

DESIGN-DETAILED	HCB	EAR	6-94
CHECKED	HCB		6-94
REVISION			
FIELD CHANGES			

PLANS

3-20-94
sa.drain.pt3

SOUTH APPROACH

STATE OF MAINE
DEPARTMENT OF TRANSPO

PORTLAND - S. PORTLA
OVER FORE RI
CUMBERLAND CO

SOUTH APPRO
DRAINAGE PLA

SHEET 116 OF 182 AUGUSTA, MA

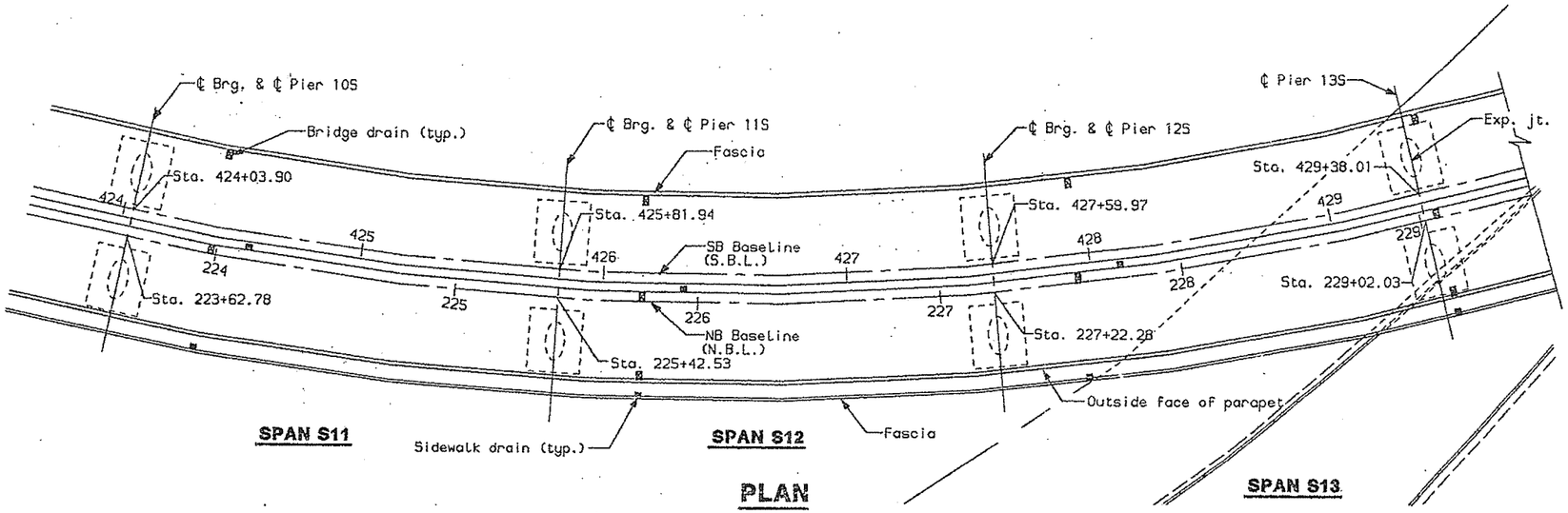

PLAN

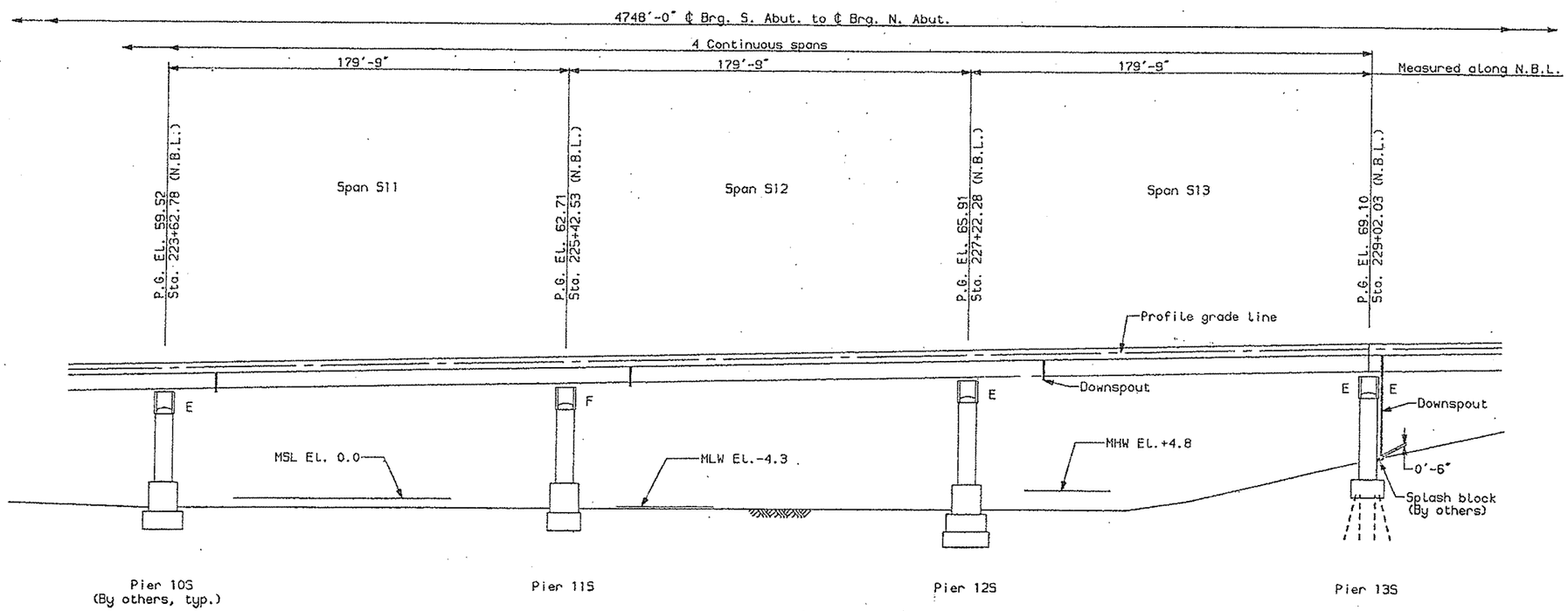

ELEVATION

BRIDGE DRAIN TYPES

Location	Southbound Roadway		Northbound Road		
Station	Shoulder		Shoulder		S
(NBL)	Outside	Median	Median	Outside	O
223+98.00	Modified	-	Standard	-	S
225+77.00	Modified	-	Standard	Standard	S
227+57.00	Modified	-	Standard	-	S
229+07.08	Modified	-	Standard	Standard	S

DESIGN-DETAILED	HCB	EAR	6-94
CHECKED	HCB		5-94
REVISION			
FIELD CHANGES			

PLANS

3-20-94
sa.drain.pl4

SOUTH APPROACH
STATE OF MAINE
DEPARTMENT OF TRANSPO

PORTLAND - S. PORTLA
OVER FORE RIV
CUMBERLAND CO

SOUTH APPRO
DRAINAGE PLA

SHEET 117 OF 182 AUGUSTA, MA

F.H.W.A. REG. NO.	STATE	PROJECT
1	MAINE	DPI-006

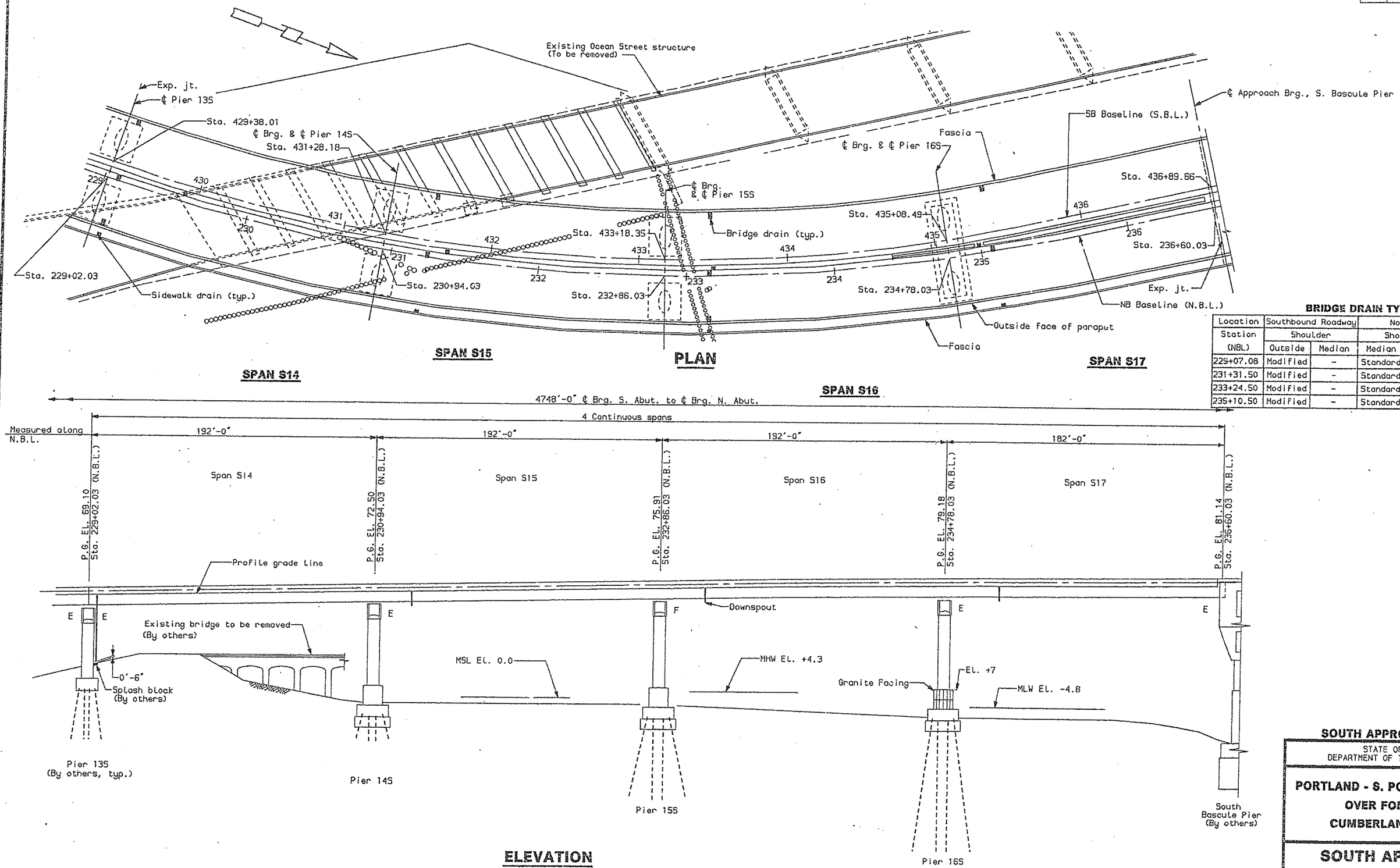

BRIDGE DRAIN TYPES

Location	Southbound Roadway		Northbound	
Station (NBL)	Shoulder		Shoulder	
	Outside	Median	Median	Outsi
229+07.08	Modified	-	Standard	Standa
231+31.50	Modified	-	Standard	-
233+24.50	Modified	-	Standard	Standa
235+10.50	Modified	-	Standard	-

PLANS

CHECKED	HCB	6-94
REVISION		
FIELD CHANGES		

3-20-94
so.drain.pl5

SOUTH APPROACH S

STATE OF MAINE
DEPARTMENT OF TRANSPOR

PORTLAND - S. PORTLAN
OVER FORE RIVE
CUMBERLAND COU

SOUTH APPRO
DRAINAGE PLA

SHEET 118 OF 182 AUGUSTA, MAIN

F.H.W.A. REG. NO.	STATE	PROJECT
1	MAINE	DPI-006

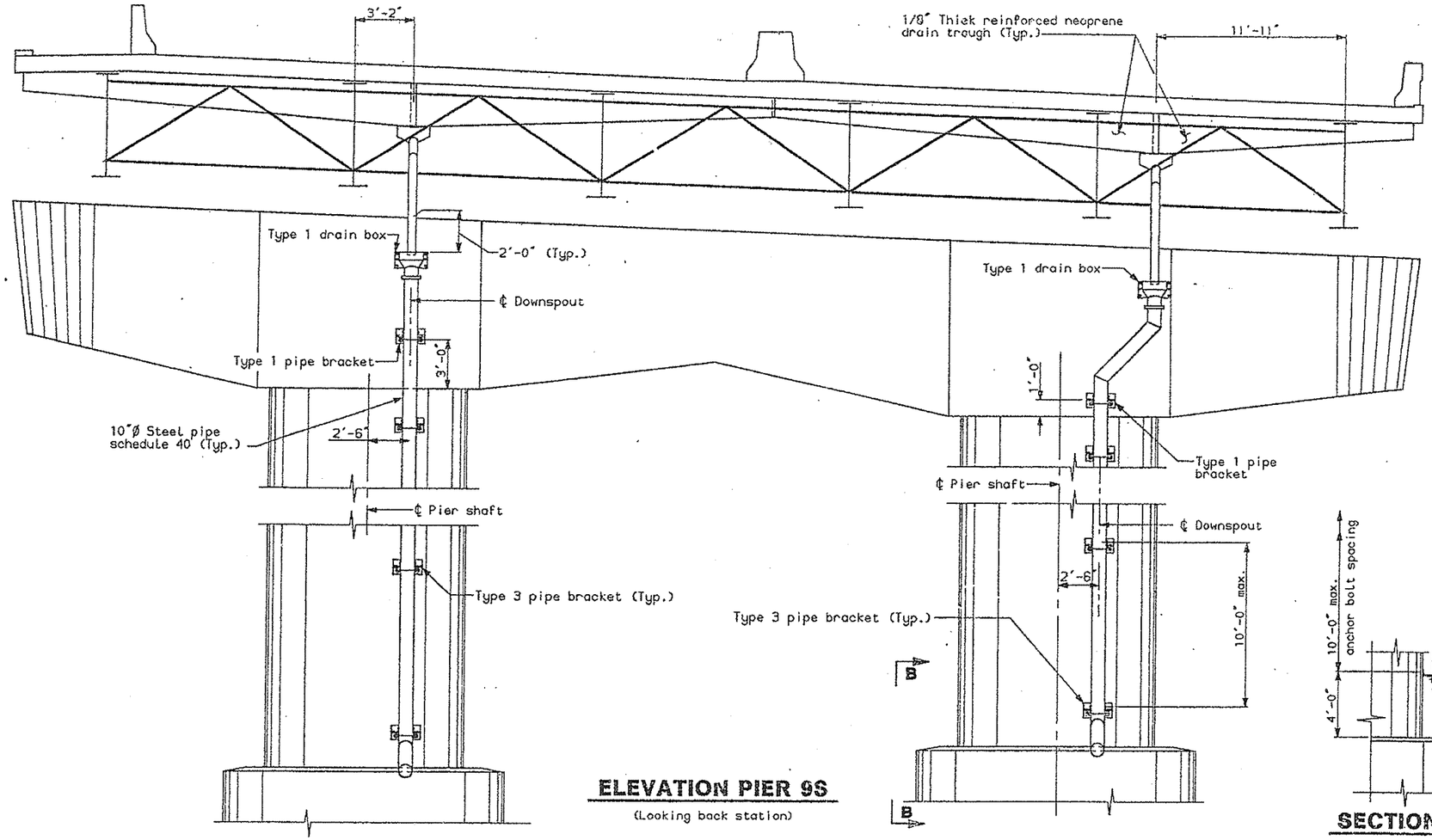

ELEVATION PIER 9S

(Looking back station)

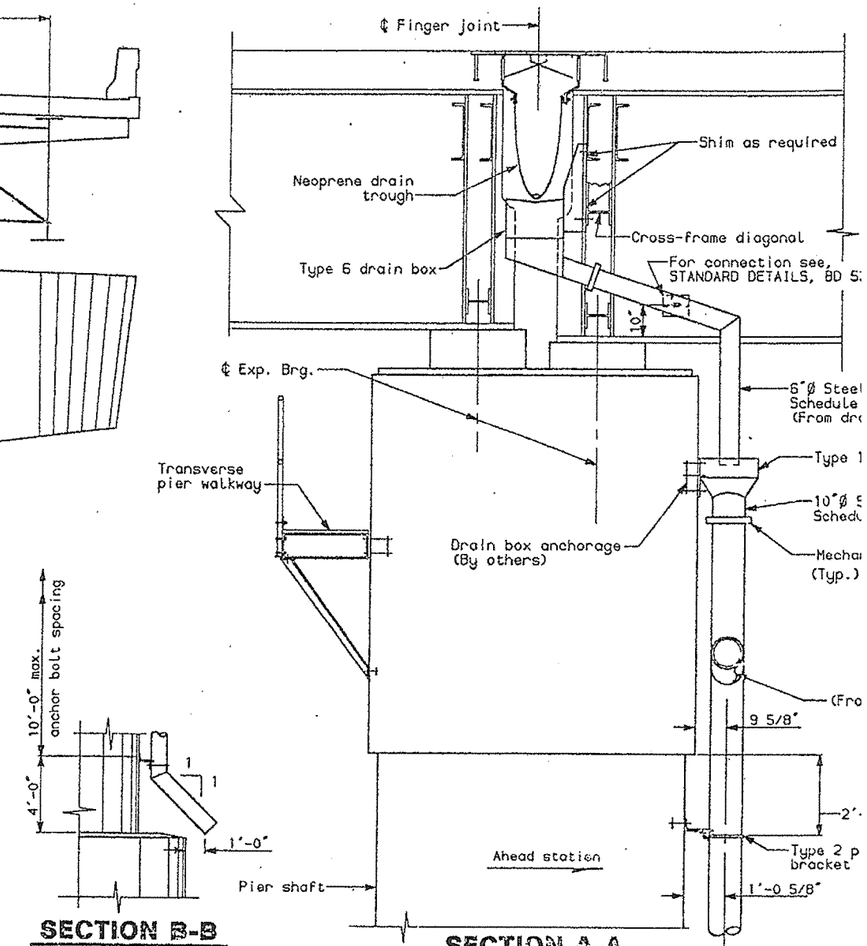

SECTION B-B

SECTION A-A

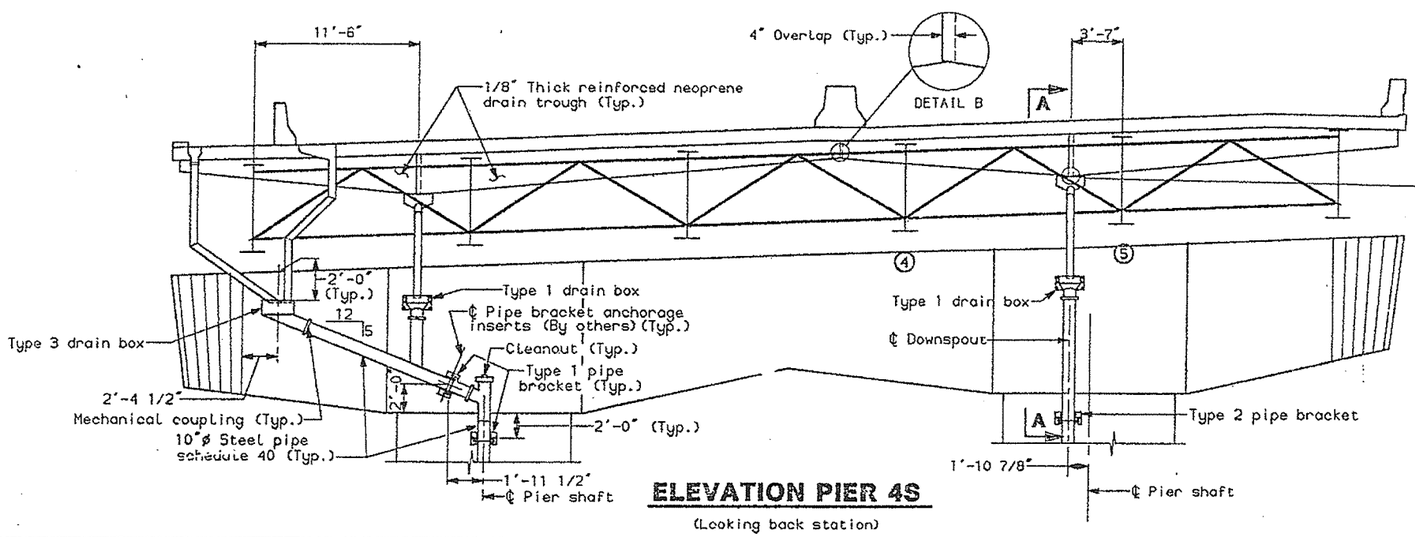

ELEVATION PIER 4S

(Looking back station)

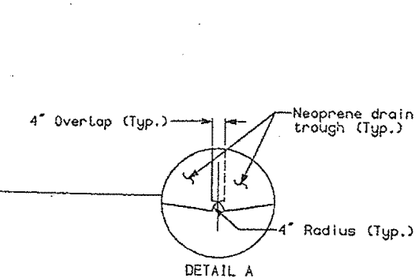

NOTES:

All drain boxes and anchoring hardware shall be galvanized M183, unl
Transverse and longitudinal walkways
Piping shall be A53, galvanized.
Field verify locations of anchor bol
in the pier strut and columns for supp
drainage system prior to fabrication.

DESIGN-DETAILED	HCB	SLH EAR	6-94
CHECKED		MDE	8-94
REVISION			
F. FIELD CHANGES			

PLANS

3-20-94

sa.drain1

SOUTH APPROACH

STATE OF MAINE
DEPARTMENT OF TRANSPO

PORTLAND - S. PORTLA
OVER FORE RIV
CUMBERLAND CO

DRAINAGE DETA

SHEET 119 OF 182 AUGUSTA, MA

F.H.W.A. REG. NO.	STATE	PROJECT N
1	MAINE	DPI-0060

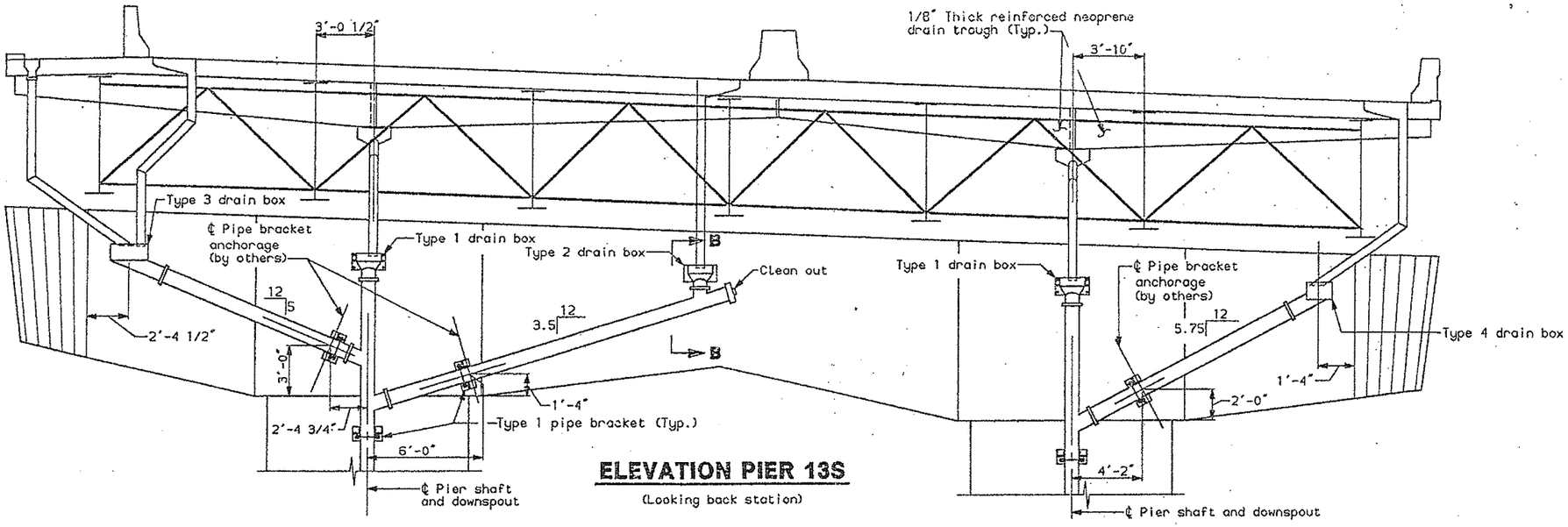

ELEVATION PIER 13S

(Looking back station)

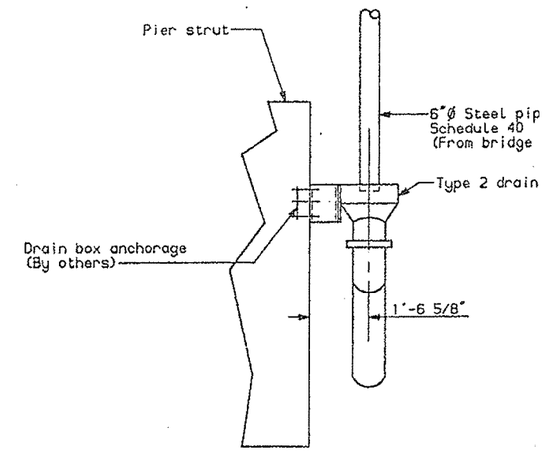

SECTION B-B

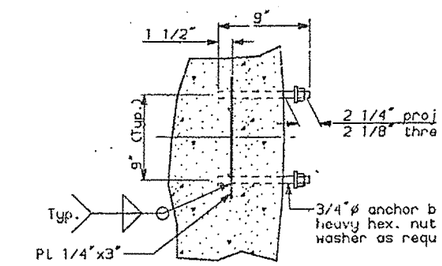

PIPE BRACKET ANCHORA

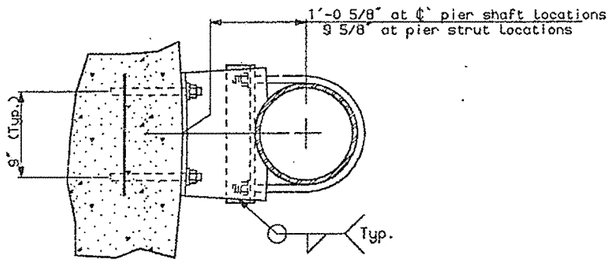

PLAN

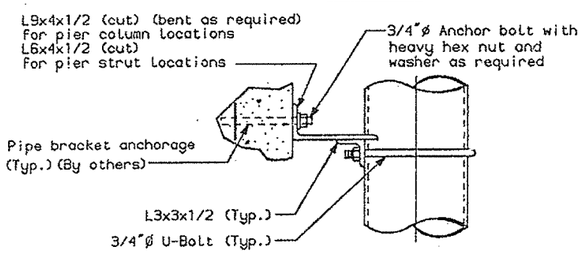

ELEVATION

TYPE 1 PIPE BRACKET DETAIL

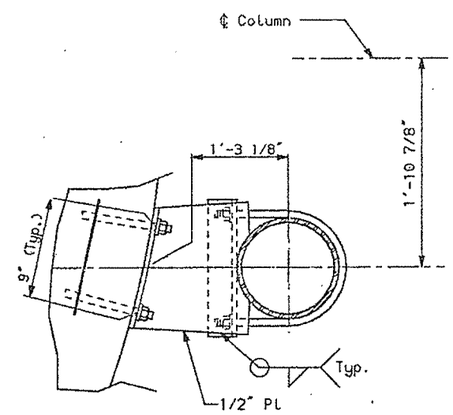

PLAN

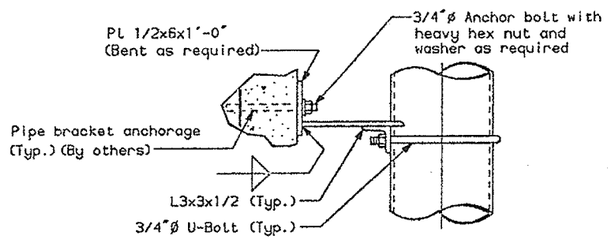

ELEVATION

TYPE 2 PIPE BRACKET DETAIL

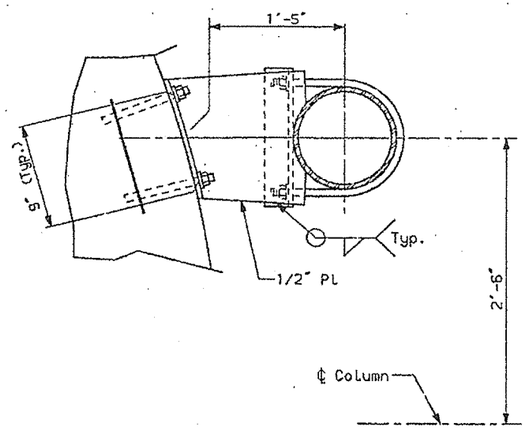

PLAN

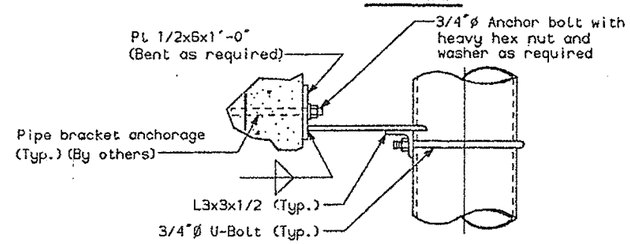

ELEVATION

TYPE 3 PIPE BRACKET DETAIL

NOTES:

See DRAINAGE DETAILS - I.

DESIGN-DETAILED	HCB	SLH EAR	6-94
CHECKED	HCB		6-94
REVISION			
FIELD CHANGES			

PLANS

3-20-94
ba.drain2

SOUTH APPROACH

STATE OF MAINE
DEPARTMENT OF TRANSPO

PORTLAND - S. PORTLA
OVER FORE RI
CUMBERLAND CO

DRAINAGE DETA

SHEET 120 OF 182 AUGUSTA, MA

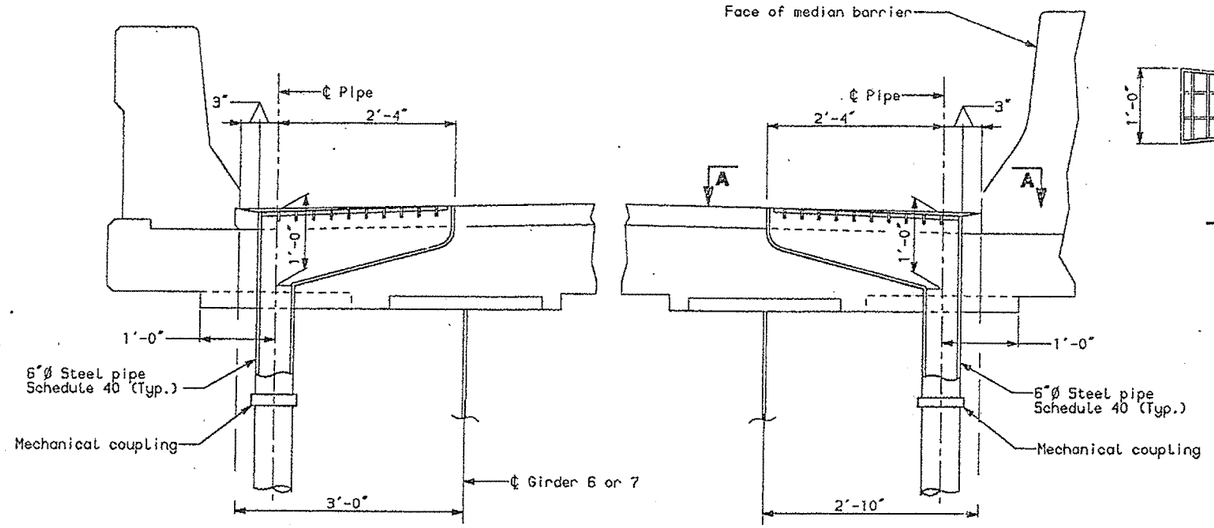

AT PARAPET

AT MEDIAN BARRIER

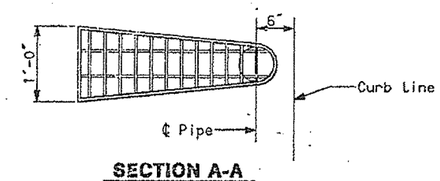

SECTION A-A

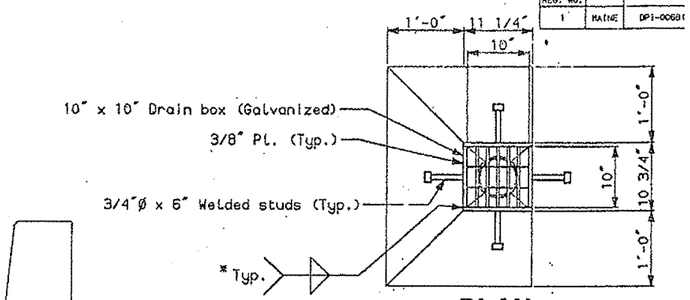

PLAN

For additional details, see STANDARD DETAILS, BD 521 - 93

STANDARD BRIDGE DRAIN MODIFIED

Note: For details not shown and for details of standard bridge drain, refer to STANDARD DRAWING, BD 521-93.

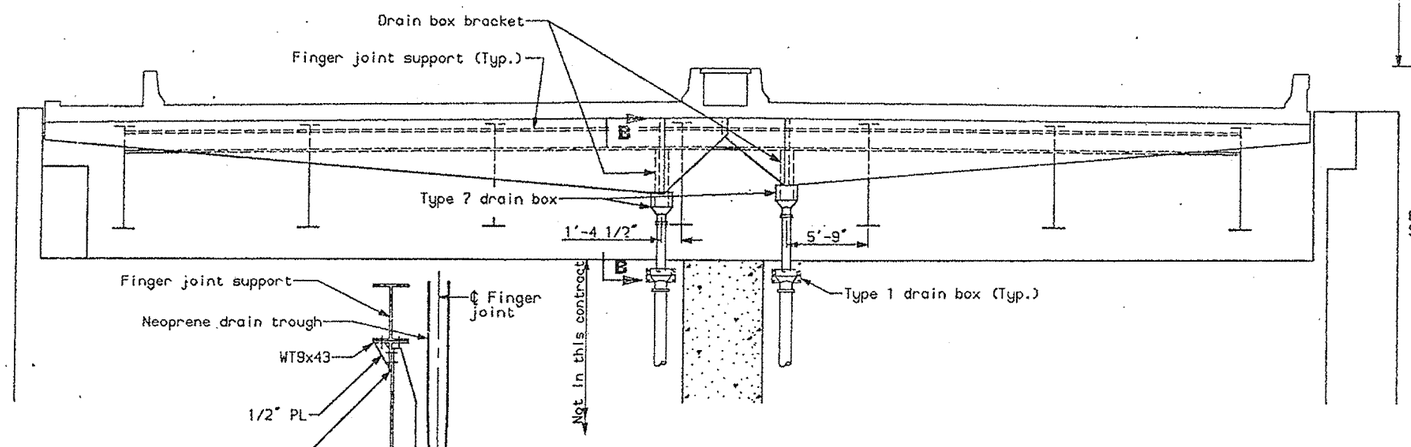

SOUTH BASCULE PIER

(Looking back station)

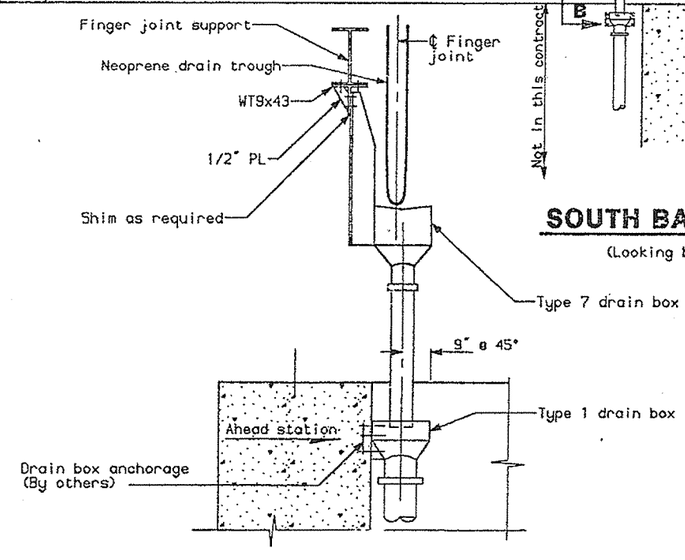

SECTION B-B

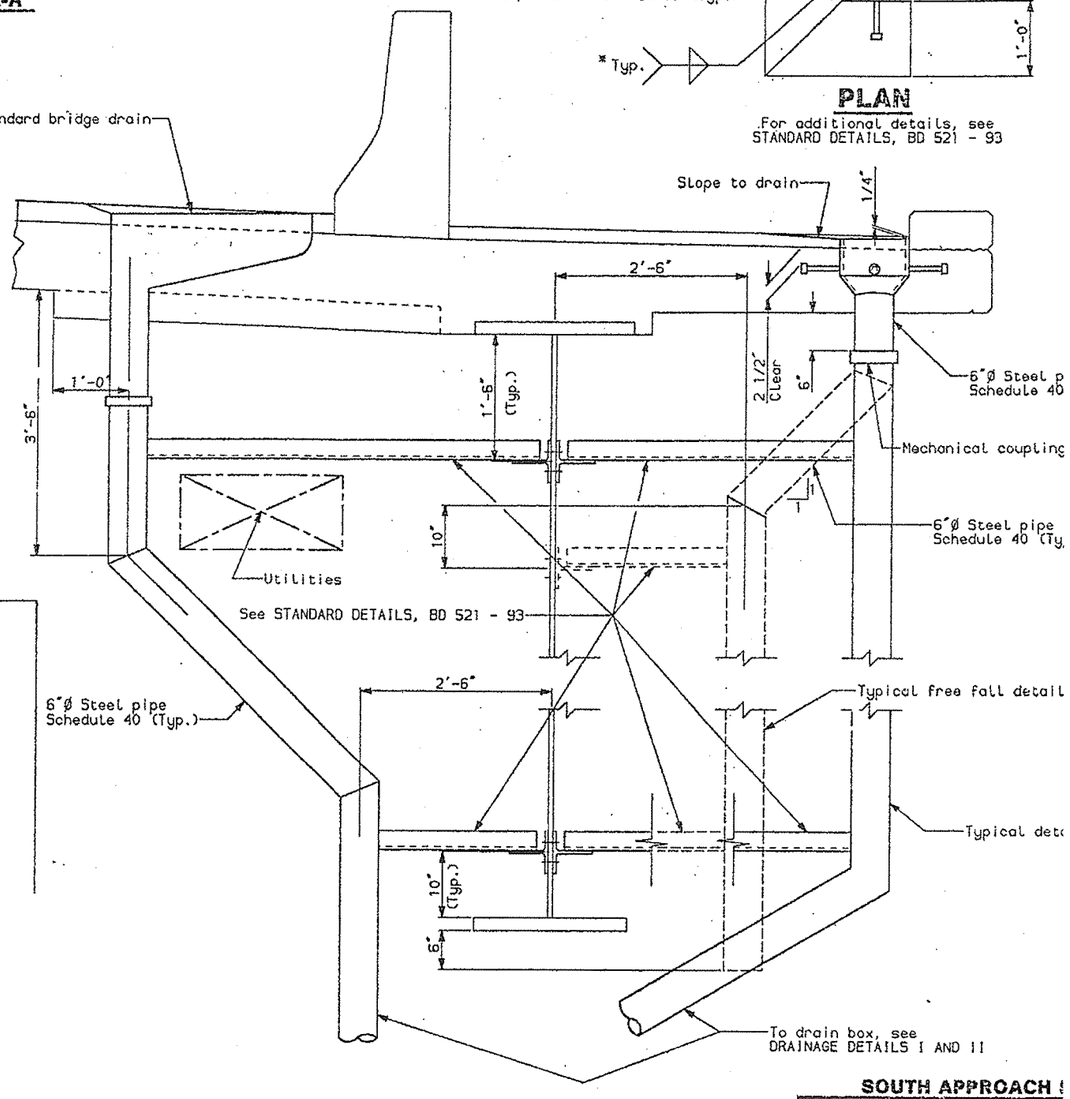

ROADWAY AND SIDEWALK DRAIN AT PIER

(Southbound and median drains similar)

NOTES:

See DRAINAGE DETAILS - I.
* Or other approved weld.

F.H.W.A. REG. NO.	STATE	PROJECT N
1	MAINE	DPI-0060

SOUTH APPROACH S

STATE OF MAINE
DEPARTMENT OF TRANSPOR

PORTLAND - S. PORTLA
OVER FORE RIV
CUMBERLAND CO

DRAINAGE DETA

SHEET 121 OF 182 AUGUSTA, MAI

PLANS

CHECKED		MCR	6-94
REVISION			
FIELD CHANGES			

3-20-94
sa.drain3

F.H.W.A. REG. NO.	STATE	PROJECT NUM
1	MAINE	DPI-0068(0

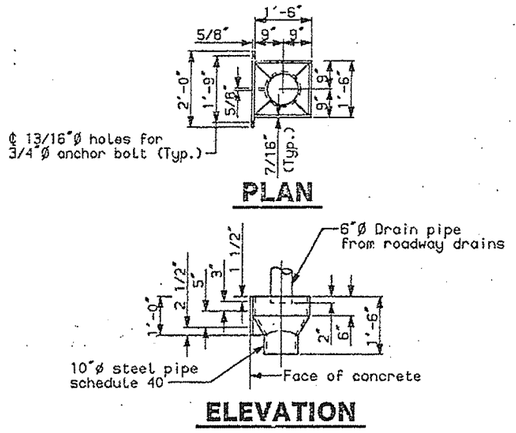

TYPE 1 DRAIN BOX

(Drain box anchorage not shown for clarity)

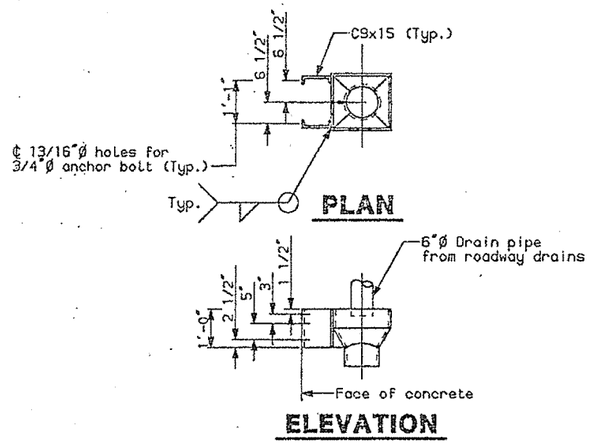

TYPE 2 DRAIN BOX

(For details not shown, see Type 1 drain box)
(Drain box anchorage not shown for clarity)

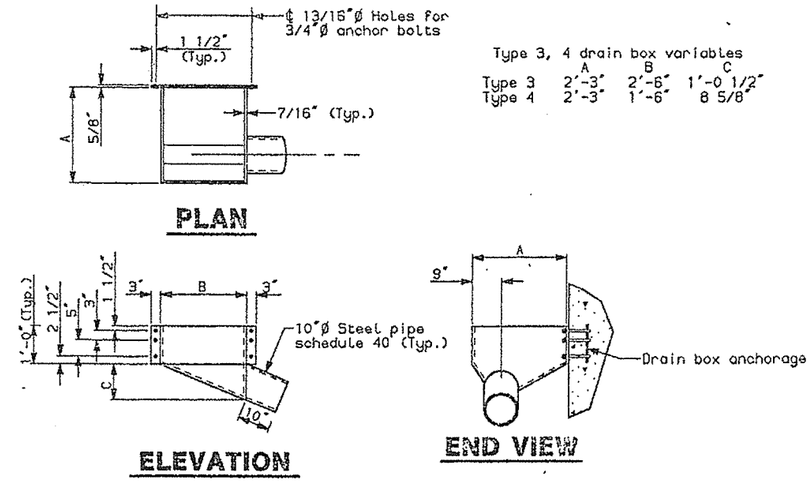

Type 3, 4 drain box variables

	A	B	C
Type 3	2'-3"	2'-6"	1'-0 1/2"
Type 4	2'-3"	1'-6"	8 5/8"

TYPE 3 & 4 DRAIN BOX

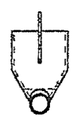

SECTION A-A

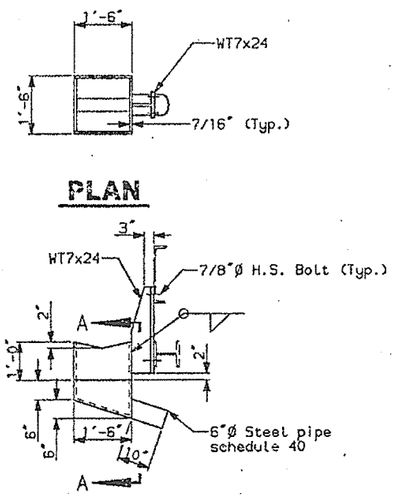

TYPE 6 DRAIN BOX

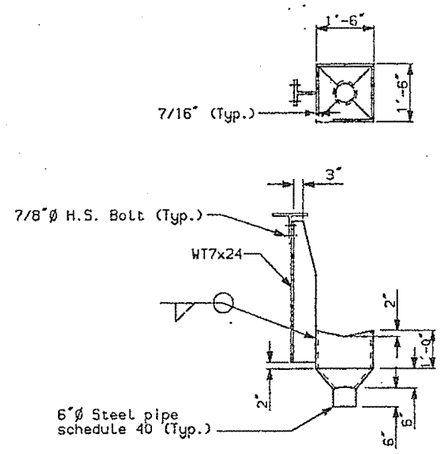

TYPE 7 DRAIN BOX

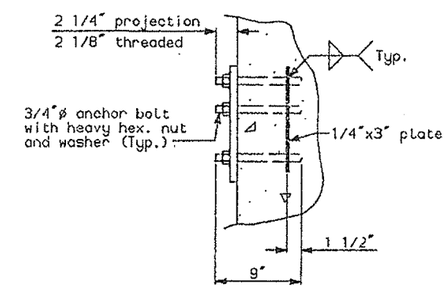

DRAIN BOX ANCHORAGE

NOTES:

See DRAINAGE DETAILS - I.

PLANS	CHECKED	HCB	6-94
	REVISION		
	FIELD CHANGES		

3-20-94
sa.drain4

SOUTH APPROACH S

STATE OF MAINE
DEPARTMENT OF TRANSPOR

PORTLAND - S. PORTLA
OVER FORE RIVE
CUMBERLAND COU

DRAINAGE DETAI

SHEET 122 OF 182 AUGUSTA, MAI

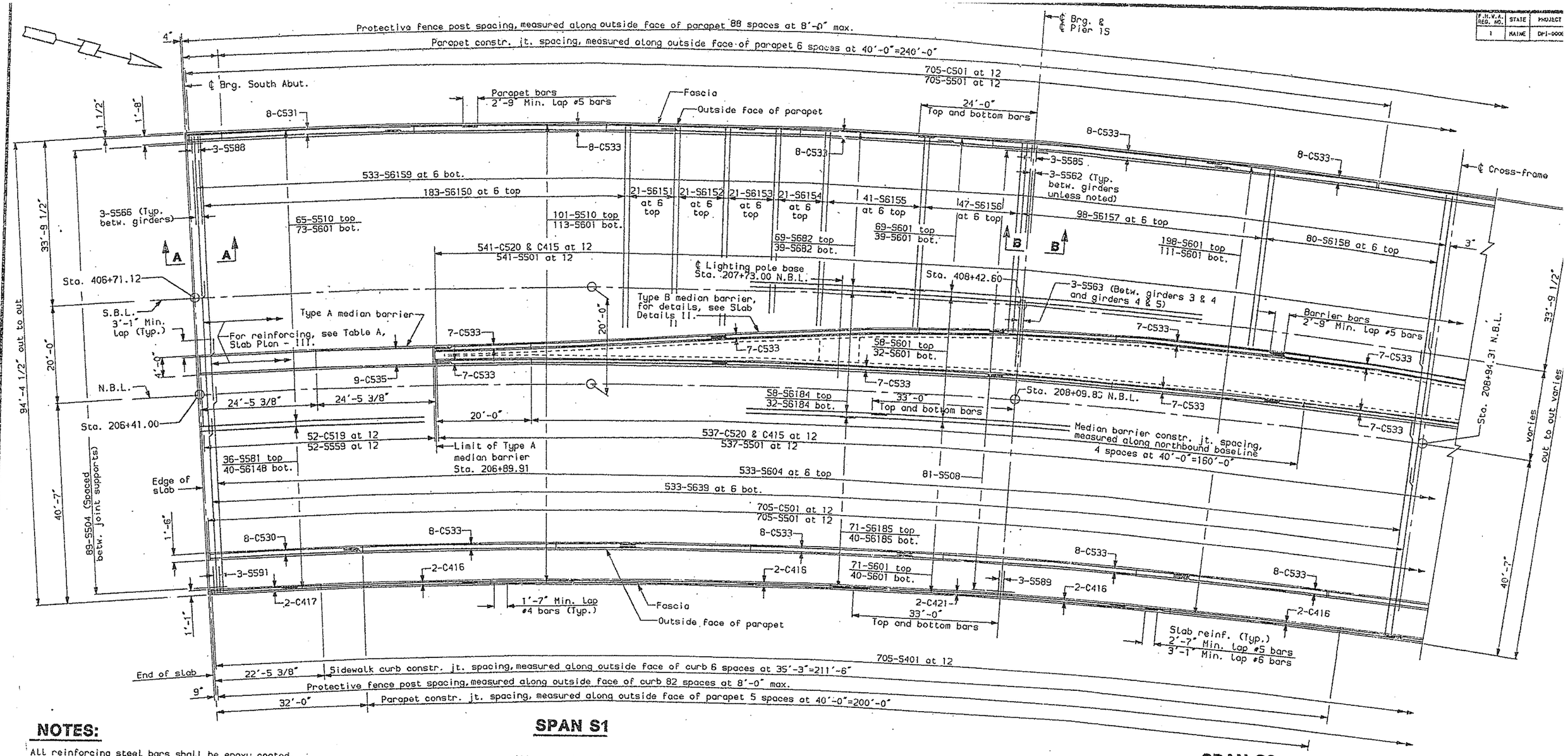

SPAN S1

SPAN S2

NOTES:

All reinforcing steel bars shall be epoxy coated.

Adjust reinforcing steel to fit around the drains in a manner approved by the Engineer. Do not cut transverse reinforcing bars.

Provide 2-inch concrete cover on reinforcing steel bars, unless otherwise shown.

Form a 1" V-groove on the fascias at the horizontal joint between the curb or parapet and the slab.

⚠ ~~For all spans deck slab concrete placement shall be done according to State of Maine BDM page 1060(1).~~ Continuous placement of the deck slab concrete in either direction will be permitted, however, if staged placement is used follow the sequence shown in the plans.

Screed rails for deck slab finishing machine wheel loads to be supported directly above girders.

Keep concrete plastic within a placement until the entire placement is complete.

Apply protective coating for concrete surfaces to the following areas in accordance with Sections 515.02 and 711.05 of the Standard Specifications:

- All exposed surfaces of the concrete barriers.
- All exposed surfaces of the concrete sidewalk including the curb.
- Each fascia down to the drip notch.
- Tops of abutment backwalls and one foot below tops of abutment backwalls.

All concrete in the parapets, median barrier, and sidewalk wearing surface shall contain a silica fume additive in accordance with Section 701.12 of the Standard Specifications.

Supporting devices (diagonal braces) for support of deck slab forming shall extend to the junction of the web and bottom flange. Submit working drawings of the proposed forms and supporting system for approval in accordance with section 502.20 of the standard specifications.

⚠ Concrete in the back and ahead station areas blocked out for expansion dam support at the bascule pier shall be placed in this contract. Payment will be included in the lump sum bid for Item 502.29.

⚠ Revised per Addendum No. 5.

F.H.W.A. REG. NO.	STATE	PROJECT
1	MAINE	DPI-0000

PLANS	CHECKED	REVISION	FIELD CHANGES
	CJB	MCI	
	8-94	10-94	

4-4-94
sl.s1s4-1

SOUTH APPROACH S

STATE OF MAINE
DEPARTMENT OF TRANSPORT

PORTLAND - S. PORTLAN
OVER FORE RIVE
CUMBERLAND COU

SLAB PLAN
SPANS S1-S4

SHEET 123 OF 182 AUGUSTA, MAINE

F.H.W.A. REG. NO.	STATE	PROJECT
1	MAINE	CPI-0068

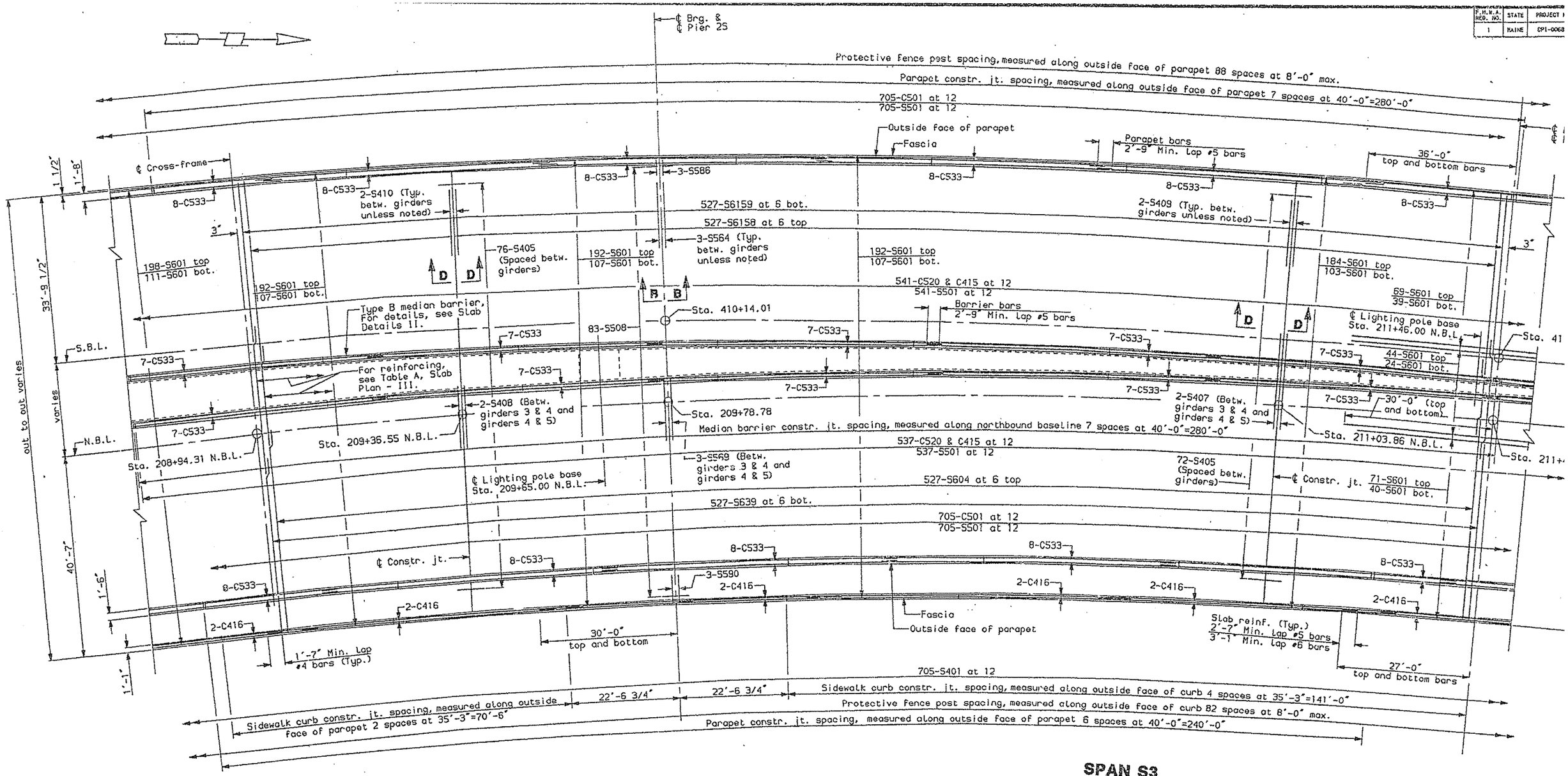

℄ Bearing South Abutment Sta. 206+41.00 (N.B.L.)	℄ Constr. jt. Sta. 209+36.55 (N.B.L.)	℄ Constr. jt. Sta. 211+03.86 (N.B.L.)	℄ Pier 4S Sta.213+16.68 (N.B.L.)
1 or 3	2	3 or 1	

SLAB PLACEMENT SEQUENCE

DESIGN-DETAILED	JCT	YEAR, DTP	S-94
CHECKED		CJH	8-94
REVISION			
FIELD CHANGES			

PLANS

4-4-94
sl.s1s4-2

SOUTH APPROACH

STATE OF MAINE
DEPARTMENT OF TRANSPOR

PORTLAND - S. PORTLA
OVER FORE RIV
CUMBERLAND CO

SLAB PLAN
SPANS S1-S4

SHEET 124 OF 182 AUGUSTA, MA

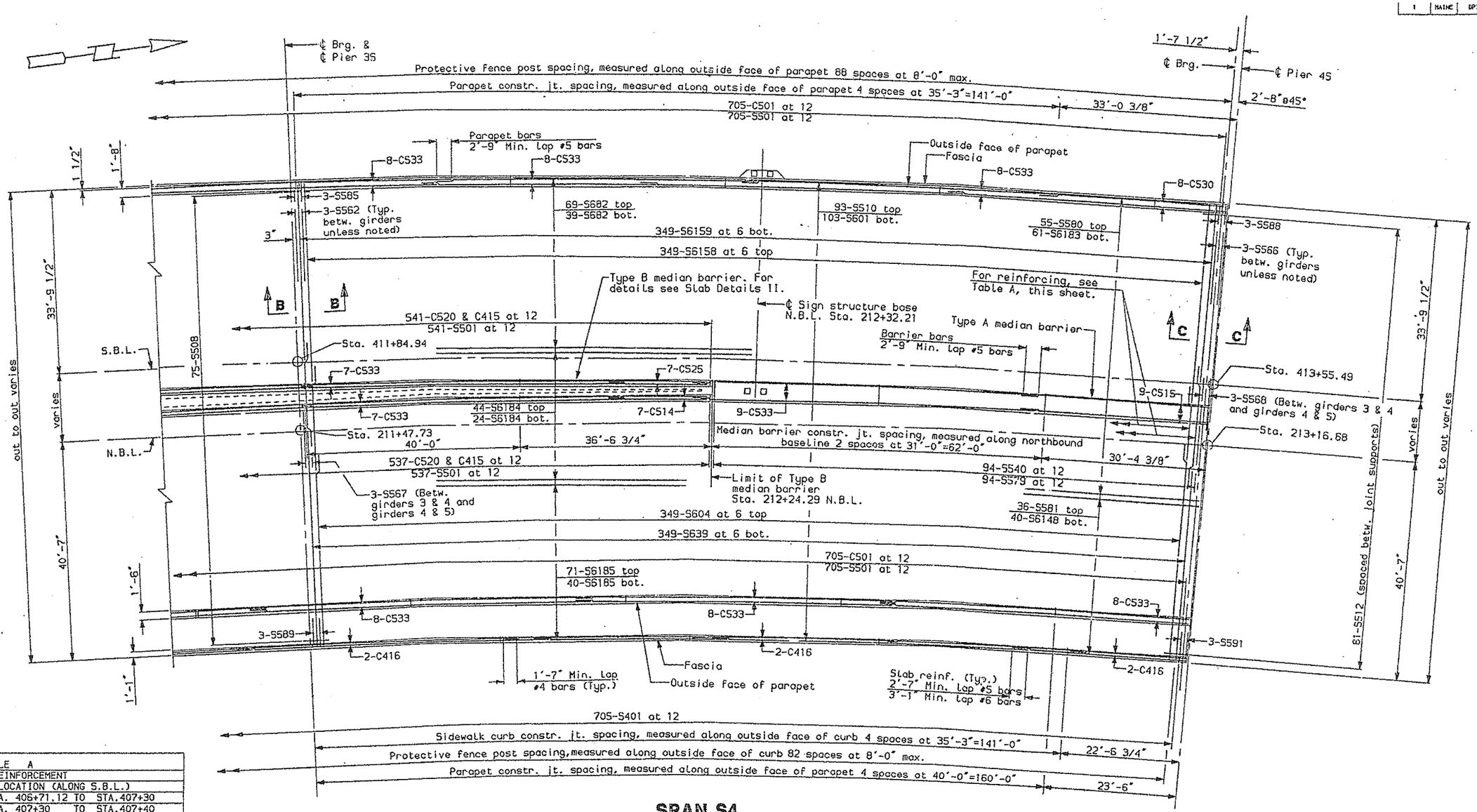

SPAN S4

TABLE A				
TOP REINFORCEMENT				
MARK	NO.	LOCATION (ALONG S.B.L.)		
S6160	122	STA. 406+71.12	TO	STA.407+30
S6161	20	STA. 407+30	TO	STA.407+40
S6162	41	STA. 407+40	TO	STA.407+60
S6163	104	STA. 407+60	TO	STA.408+10
S6164	62	STA. 408+10	TO	STA.408+40
S6165	83	STA. 408+40	TO	STA.408+80
S6166	104	STA. 408+80	TO	STA.409+30
S6167	165	STA. 409+30	TO	STA.410+10
S6168	185	STA. 410+10	TO	STA.411+00
S6169	328	STA. 411+00	TO	STA.412+60
S6170	195	STA. 412+60	TO	STA.413+55.49
BOTTOM REINFORCEMENT				
MARK	NO.	LOCATION (ALONG S.B.L.)		
S6171	122	STA. 406+71.12	TO	STA.407+30
S6172	20	STA. 407+30	TO	STA.407+40
S6173	41	STA. 407+40	TO	STA.407+60
S6174	104	STA. 407+60	TO	STA.408+10
S6175	62	STA. 408+10	TO	STA.408+40
S6176	83	STA. 408+40	TO	STA.408+80
S6177	104	STA. 408+80	TO	STA.409+30
S6178	165	STA. 409+30	TO	STA.410+10
S6179	185	STA. 410+10	TO	STA.411+00
S6180	328	STA. 411+00	TO	STA.412+60
S6181	195	STA. 412+60	TO	STA.413+55.49

DESIGN-DETAILED	MCI	CEAK, DTP	6-94
CHECKED	CJB		6-94
REVISION			
FIELD CHANGES			

PLANS

4-4-94
sl.s1s4-3

SOUTH APPROACH

STATE OF MAINE
DEPARTMENT OF TRANSPOR

PORTLAND - S. PORTLA
OVER FORE RIV
CUMBERLAND CO

SLAB PLAN
SPANS S1-S4

SHEET 125 OF 182 AUGUSTA, MAI

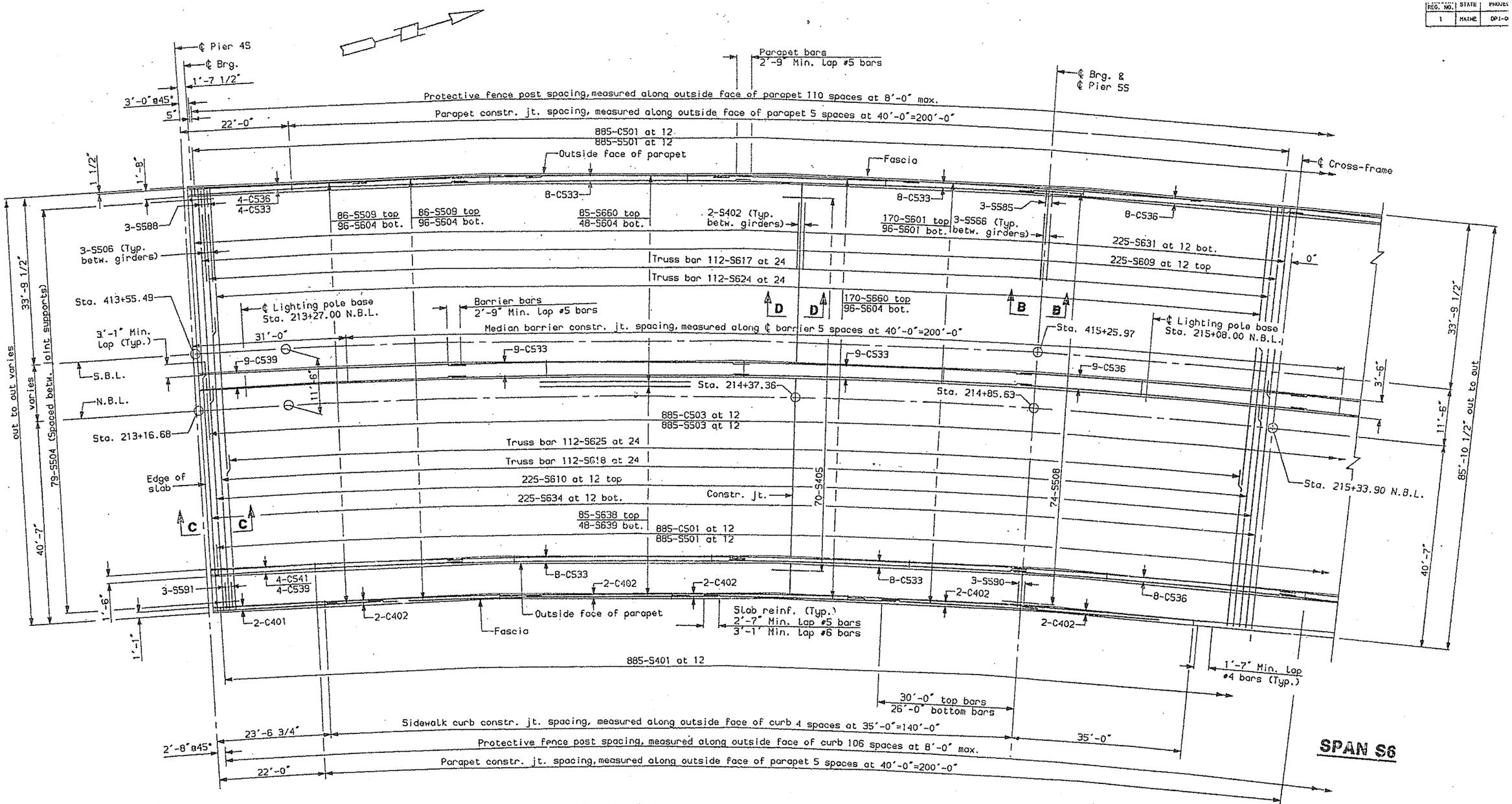

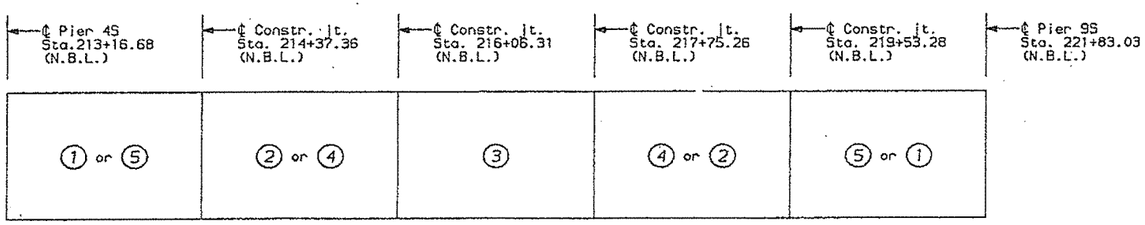

SLAB PLACEMENT SEQUENCE

REG. NO.	STATE	PROJEC
1	MAINE	DPI-0

DESIGN-DETAILED	MCI	EAR, DTP	6-94
CHECKED		HCB	6-94
REVISION			
FIELD CHANGES			

PLANS

SOUTH APPROACH

STATE OF MAIN
DEPARTMENT OF TRANSP

PORTLAND - S. PORTL
OVER FORE R
CUMBERLAND C

SLAB PLA
SPANS S5-S

SHEET 126 OF 182 AUGUSTA, M

sl.s5s9-1

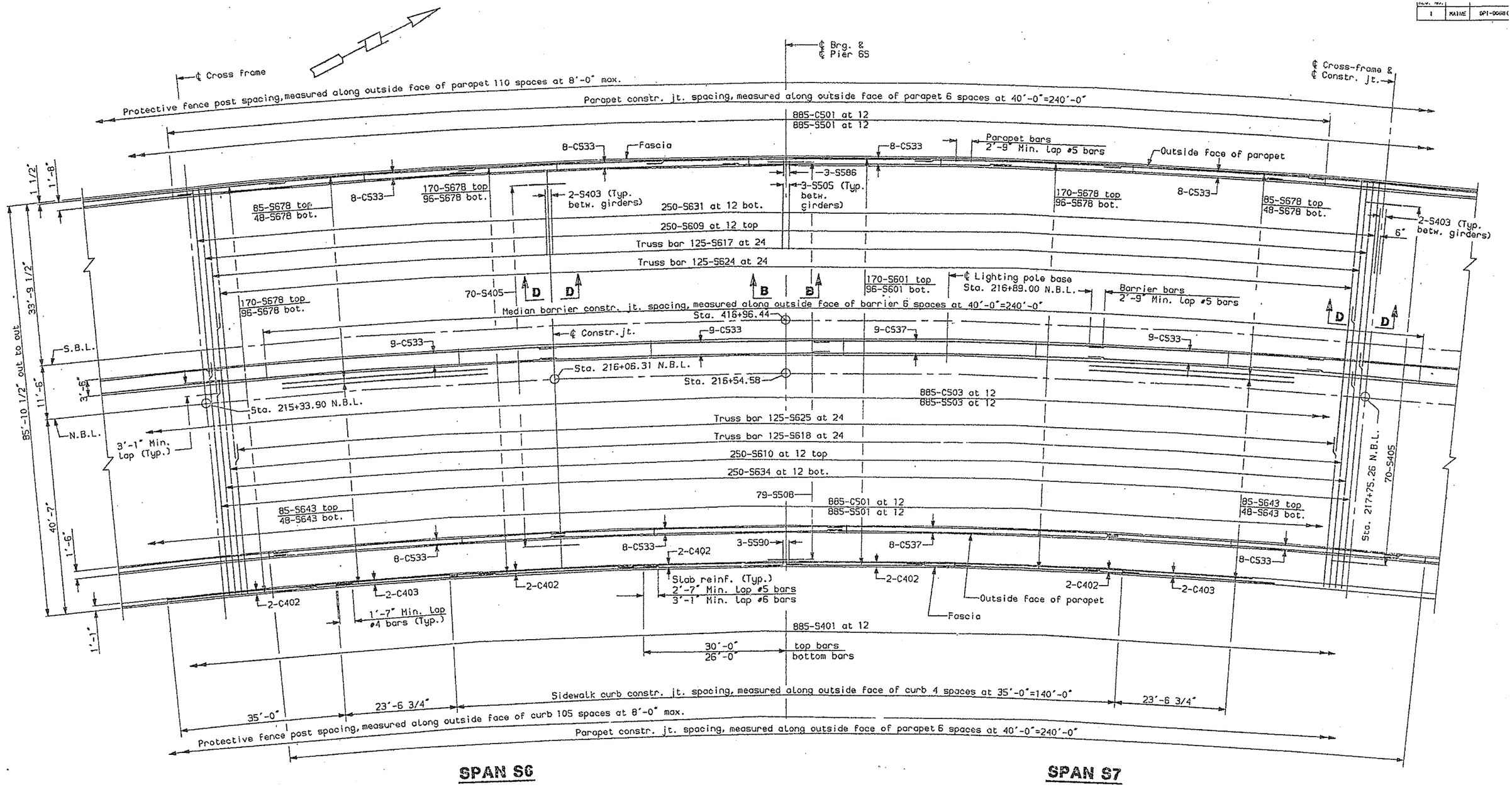

REV. NO.		
1	MAINE	DPI-0068(

PLANS

DESIGN-DETAILED	MCI	EAR, DTP	6-94
CHECKED	MCB		6-94
REVISION			
FIELD CHANGES			

st.s5s9-2

SOUTH APPROACH S

STATE OF MAINE
DEPARTMENT OF TRANSPOR

PORTLAND - S. PORTLA
OVER FORE RIV
CUMBERLAND CO

SLAB PLAN
SPANS S5-S9

SHEET 127 OF 182 AUGUSTA, MAI

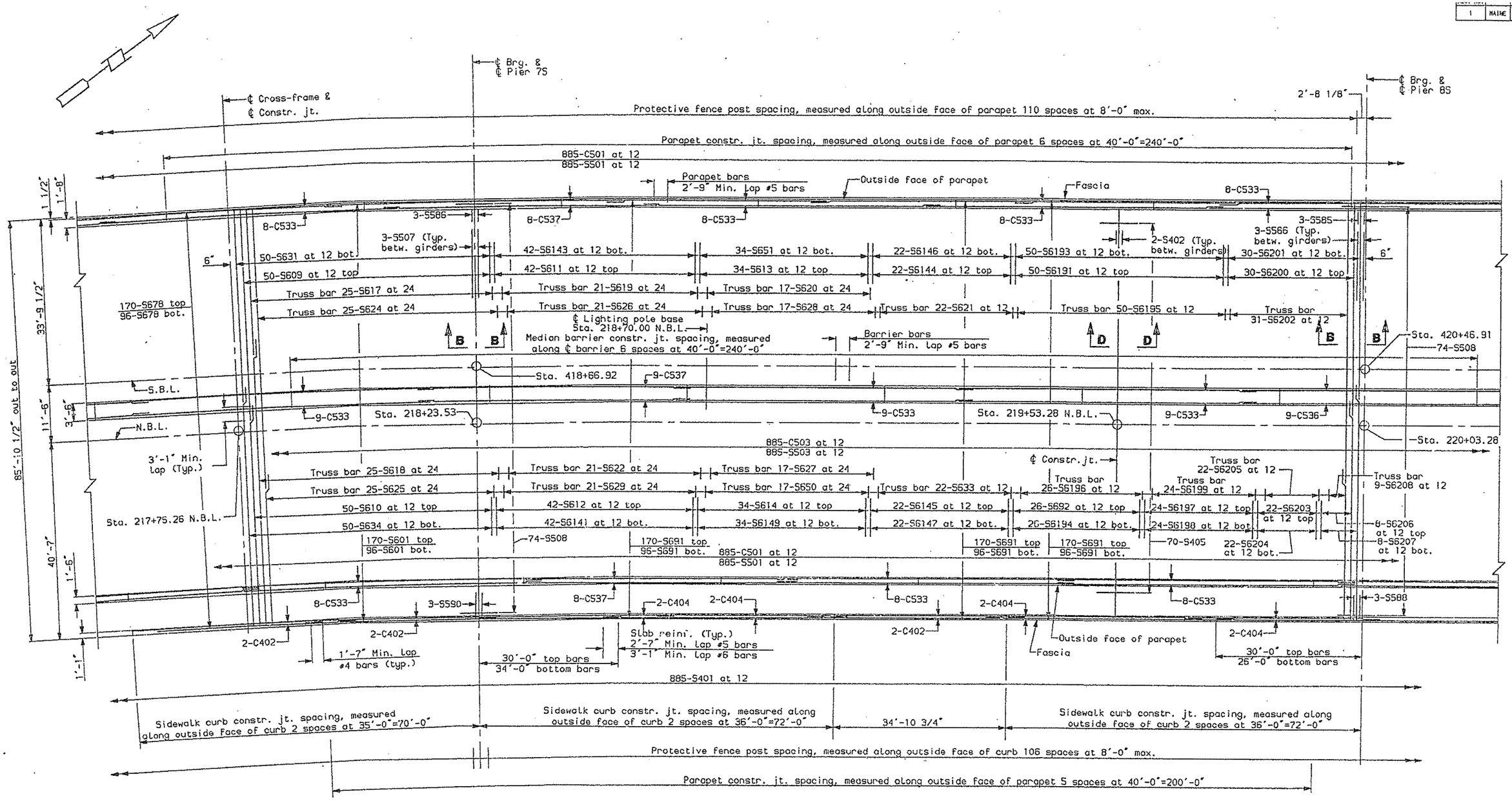

SPAN S7

SPAN S8

SOUTH APPROACH S

STATE OF MAINE
DEPARTMENT OF TRANSPORTA

PORTLAND - S. PORTLAN
OVER FORE RIVE
CUMBERLAND COU

SLAB PLAN
SPANS S5-S9 -

SHEET 128 OF 182 AUGUSTA, MAINE

PLANS | CHECKED | REVISION | FIELD CHANGES | HCB | 6-94

st.s5s9-3

REG. NO.	STATE	PROJECT NUMBER
1	MAINE	OPI-0068(002)

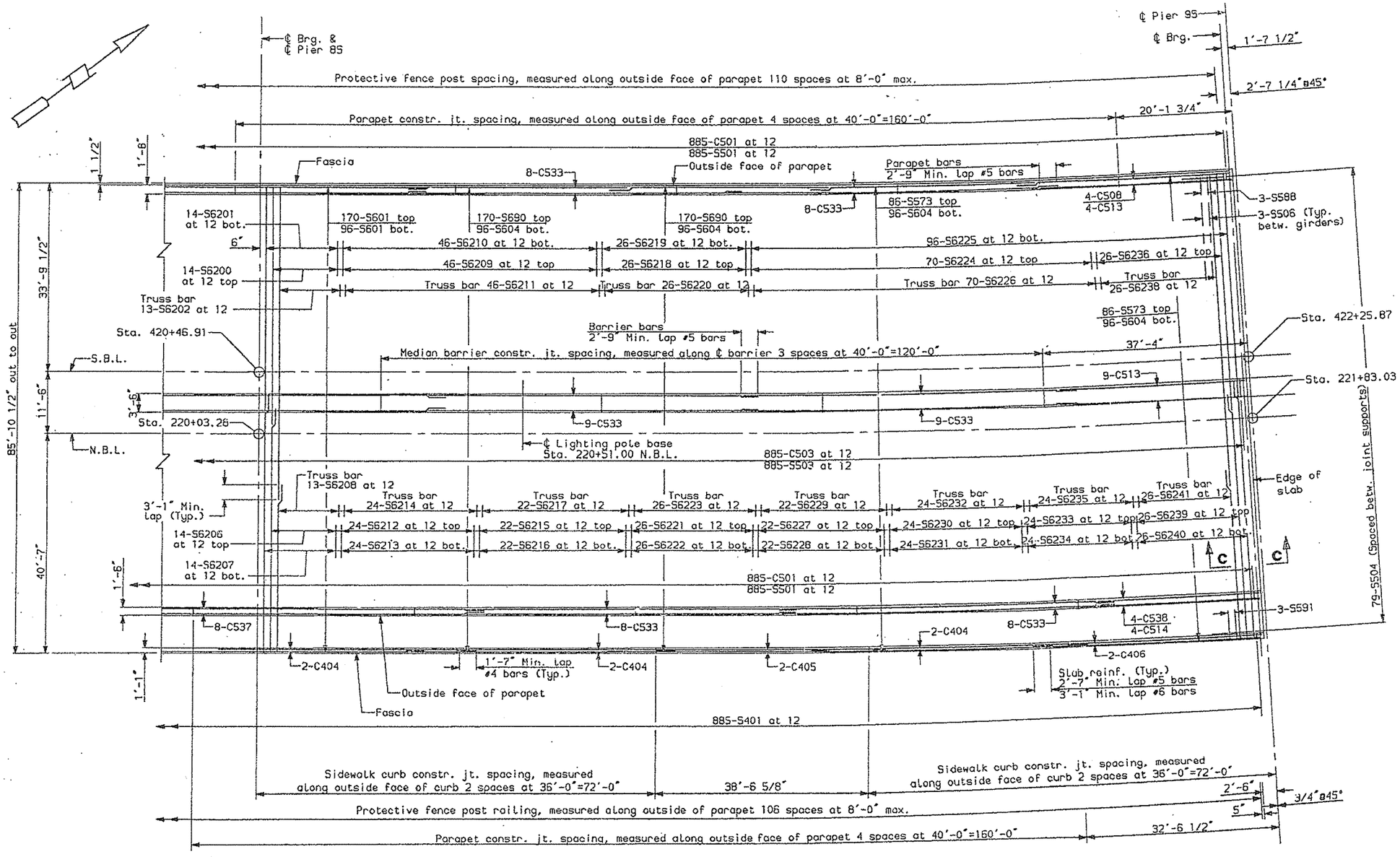

SPAN S8

SPAN S9

REVISION
FIELD CHANGES

sl.s5s9-4

SOUTH APPROACH SP

STATE OF MAINE
DEPARTMENT OF TRANSPORTAT

PORTLAND - S. PORTLAND
OVER FORE RIVER
CUMBERLAND COUN

SLAB PLAN
SPANS S5-S9 -

SHEET 129 OF 182 AUGUSTA, MAINE

F.H.W.A. REG. NO.	STATE	PROJECT NUMBER
1	MAINE	DPI-0068(002)

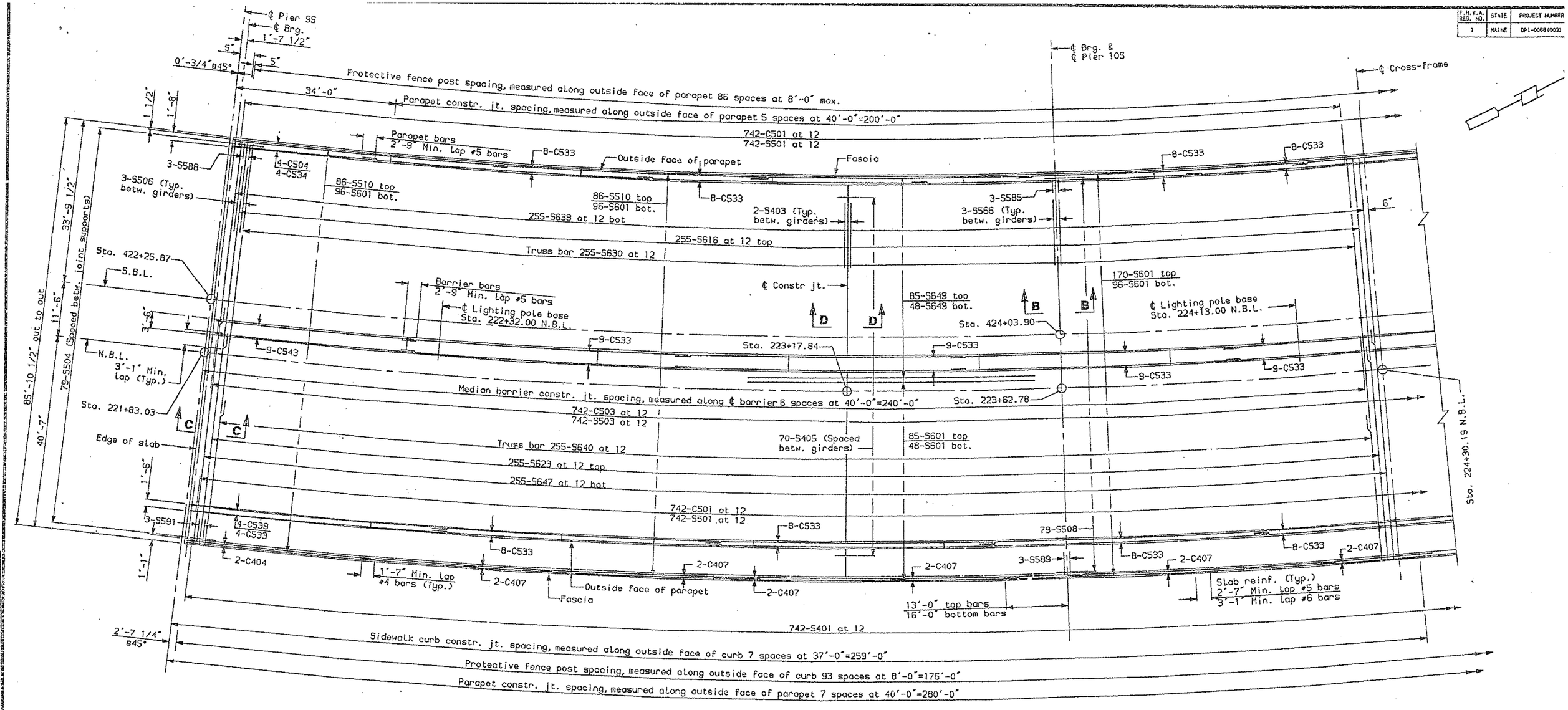

SPAN 10 **SPAN 11**

℄ Pier 9S Sta. 221+83.03 (N.B.L.)	℄ Constr. jt. Sta. 223+17.84 (N.B.L.)	℄ Constr. jt. Sta. 224+97.59 (N.B.L.)	℄ Constr. jt. Sta. 226+77.34 (N.B.L.)	℄ Pier 13S Sta. 221+83.03 (N.B.L.)
1 or 4	2 or 3	3 or 2	4 or 1	

SLAB PLACEMENT SEQUENCE

REVISION
FIELD CHANGES

SOUTH APPROACH SP.
STATE OF MAINE
DEPARTMENT OF TRANSPORTAT

PORTLAND - S. PORTLAND
OVER FORE RIVER
CUMBERLAND COUN

SLAB PLAN
SPANS S10-S13

SHEET 130 OF 182 AUGUSTA, MAINE

sL.s10s13-1

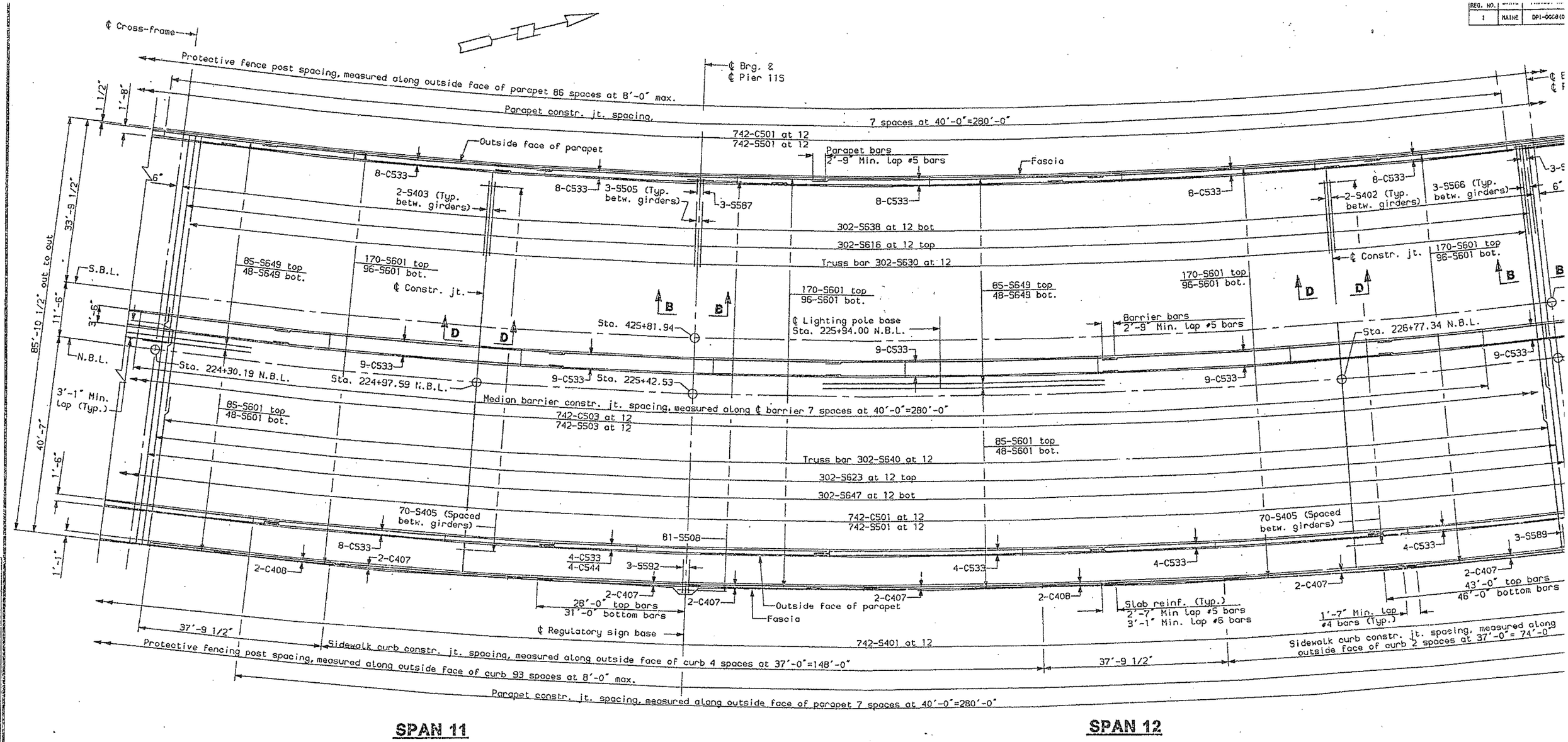

REG. NO.		
1	MAINE	DPI-0008(0

DESIGN-DETAILED	MCI	EAR, DIP	6-94
CHECKED	HCB		6-94
REVISION			
FIELD CHANGES			

PLANS

SOUTH APPROACH

STATE OF MAINE
DEPARTMENT OF TRANSPOR

PORTLAND - S. PORTLA
OVER FORE RIV
CUMBERLAND CO

SLAB PLA
SPANS S10-S1

SHEET 131 OF 182 AUGUSTA, MA

sl.s10s13-2

F.H.W.A. REG. NO.	STATE	PROJECT NUMBER
1	MAINE	DPI-0058(002)

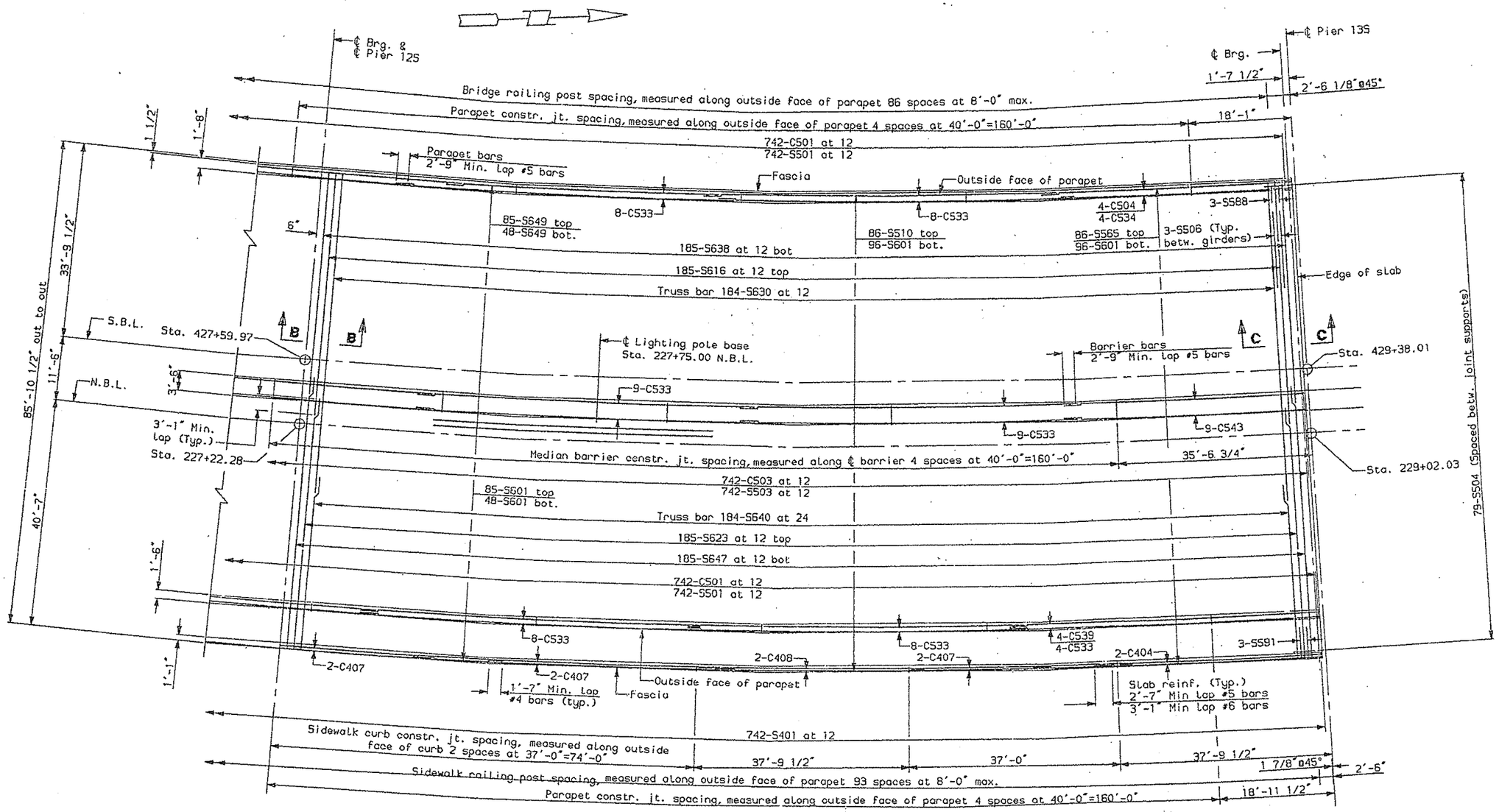

REVISION	FIELD CHANGES

PLANS

SOUTH APPROACH SP

STATE OF MAINE
DEPARTMENT OF TRANSPORTA

PORTLAND - S. PORTLAND
OVER FORE RIVER
CUMBERLAND COUN

SLAB PLAN
SPANS S10-S13

SHEET 132 OF 182 AUGUSTA, MAINE

st.s10s13-3

F.H.W.A. REG. NO.	STATE	PROJECT NUMBER
1	MAINE	DPI-0069(002)

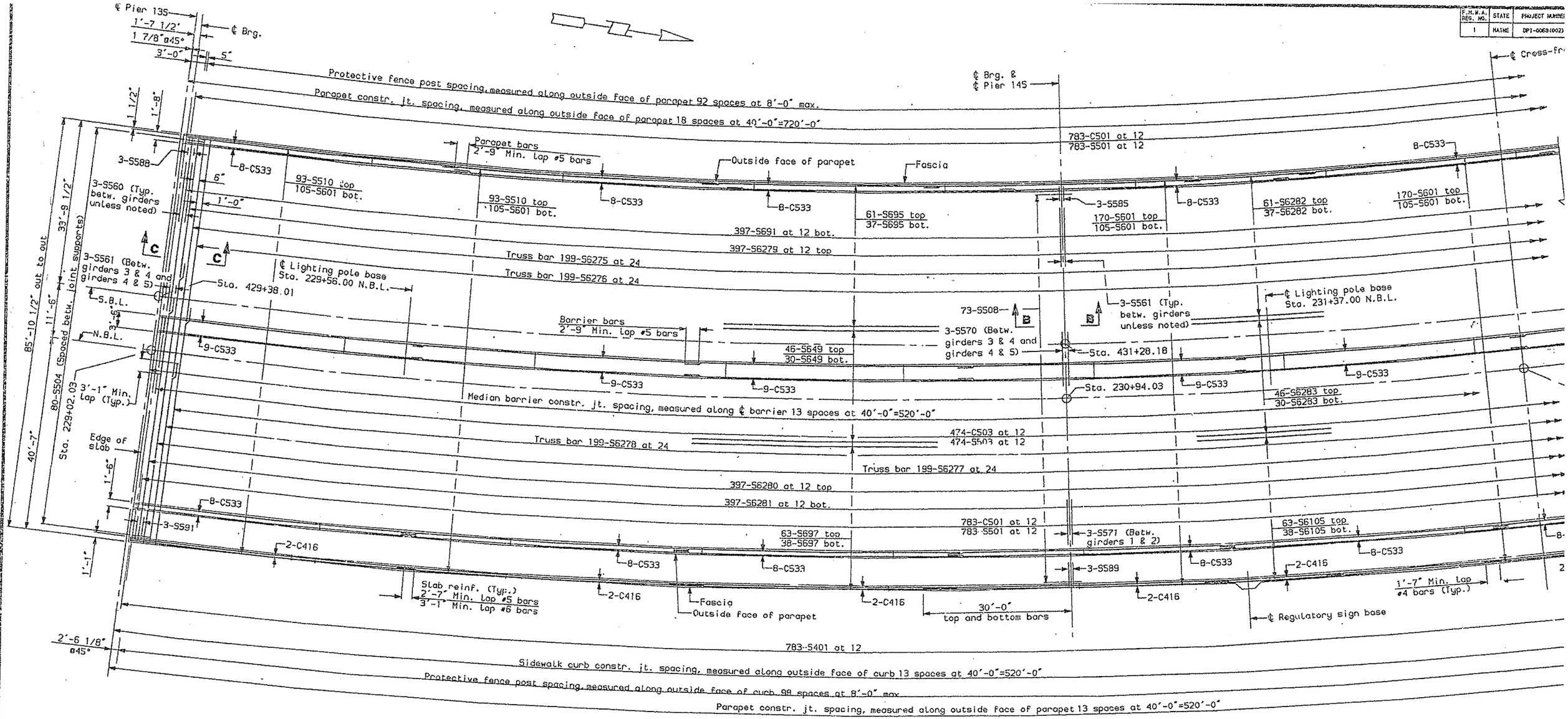

SPAN S14

SPAN S15

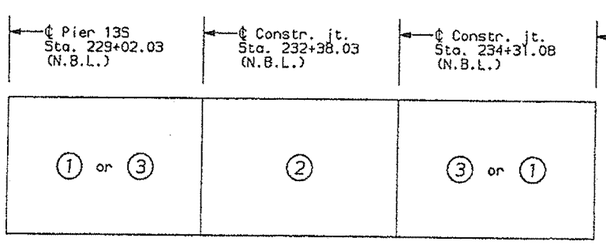

SLAB PLACEMENT SEQUENCE

REVISION
FIELD CHANGES

SOUTH APPROACH SPA

STATE OF MAINE
DEPARTMENT OF TRANSPORTATI

PORTLAND - S. PORTLAND
OVER FORE RIVER
CUMBERLAND COUNT

SLAB PLAN
SPANS S14-S17

SHEET 133 OF 182 AUGUSTA, MAINE

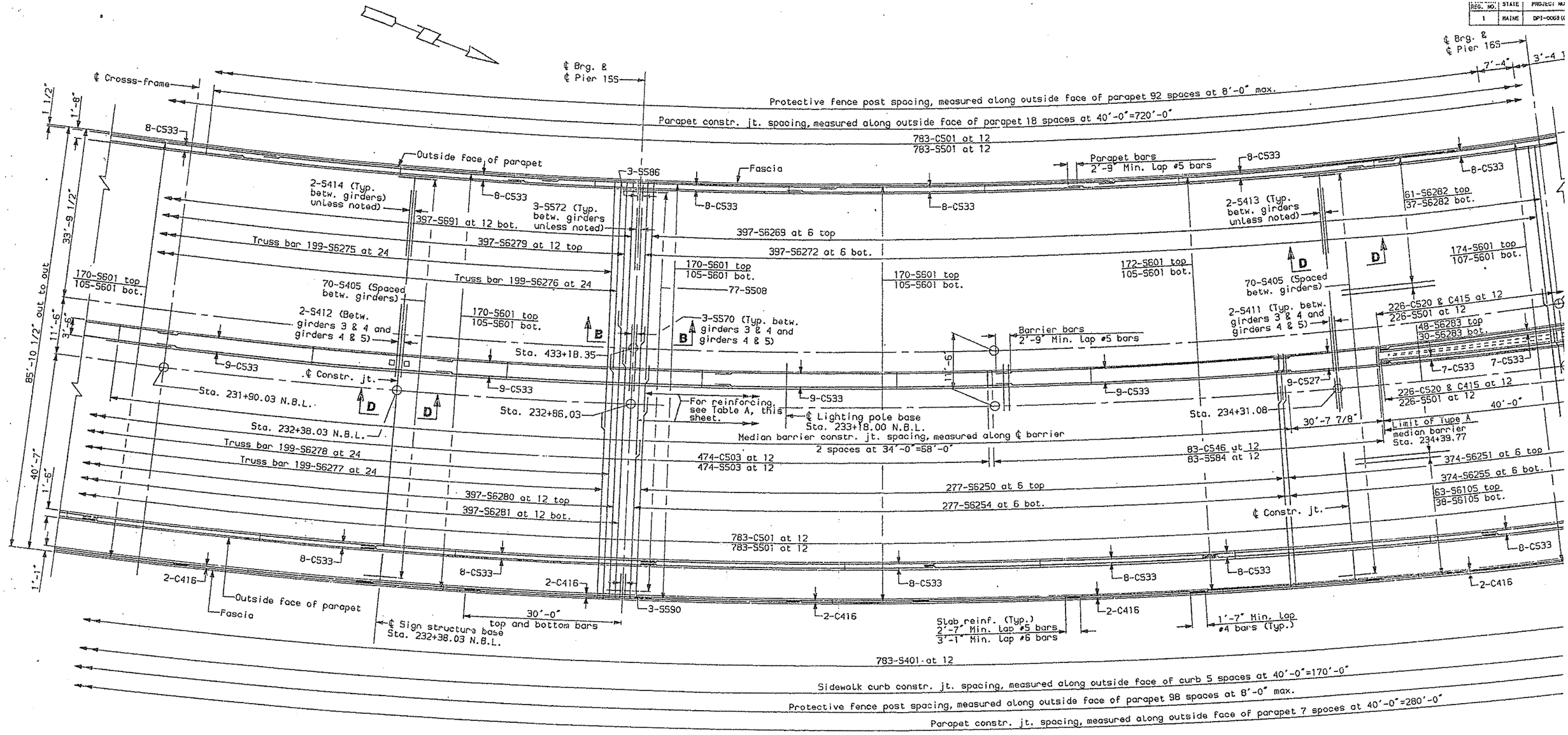

SPAN S15

SPAN S16

⚠

NOTE:

Install one 8" deep by 8" high by 18" long outside flanged recessed cover galvanized iron junction box (NEMA 4) in the east parapet at Sta. 232+81.03 and one at Sta. 232+91.03. Center junction boxes in upper sloping face of east parapet.

One 2" diameter galvanized rigid steel conduit will exit the north end of each junction box, and one 2" diameter galvanized rigid steel conduit will exit the south end of the southerly junction box. See drawing CONDUIT LAYOUT PLAN - GATES AND SIGNALS.

Additionally, one 2" diameter galvanized rigid steel conduit will sweep out of the north end of the southerly junction box and exit the bottom of the slab at Sta. 232+86.03 and be stubbed-off with a threaded end 3" beneath the slab, and one 2" diameter galvanized rigid steel conduit will sweep out of the south end of the northerly junction box and exit the bottom of the slab at Sta. 232+86.03 and be stubbed-off with a threaded end 3" beneath the slab. These conduits will be extended to the traffic gate in a future contract.

One 3/4" diameter conduit for drainage will exit the low end of each junction box and extend to 2" beneath the slab.

Table A

Top Reinforcement		
Mark	No.	Location (along S.B.L.)
S6258	153	Sta. 433+18.35 to Sta. 433+91.61
S6259	124	Sta. 433+91.61 to Sta. 434+50.99
S6260	269	Sta. 434+50.99 to Sta. 435+79.66
S6261	211	Sta. 435+79.66 to Sta. 436+84.62
S6262	14	Sta. 436+84.62 to Sta. 436+91.67

Bottom Reinforcement		
Mark	No.	Location (along S.B.L.)
S6263	153	Sta. 433+18.35 to Sta. 433+91.61
S6264	124	Sta. 433+91.61 to Sta. 434+50.99
S6265	120	Sta. 434+50.99 to Sta. 435+08.49
S6266	149	Sta. 435+08.49 to Sta. 435+79.66
S6267	211	Sta. 435+79.66 to Sta. 436+84.62
S6268	14	Sta. 436+84.62 to Sta. 436+91.67

⚠ Revised, 10-07-94

REG. NO.	STATE	PROJECT NO.
1	MAINE	DPI-0068 (0

REVISION	DATE	CHECKED	REVISION	FIELD CHANGES
1	6-94	CJG	MCT	10-94

PLANS

4-4-94
sl.s14s17-2

SOUTH APPROACH

STATE OF MAINE
DEPARTMENT OF TRANSPO

PORTLAND - S. PORTLA
OVER FORE RIV
CUMBERLAND CO

SLAB PLA
SPANS S14-S1

SHEET 134 OF 182 AUGUSTA, MA

F.H.W.A. REG. NO.	STATE	PROJECT NUMBER
1	MAINE	DPI-0068(002)

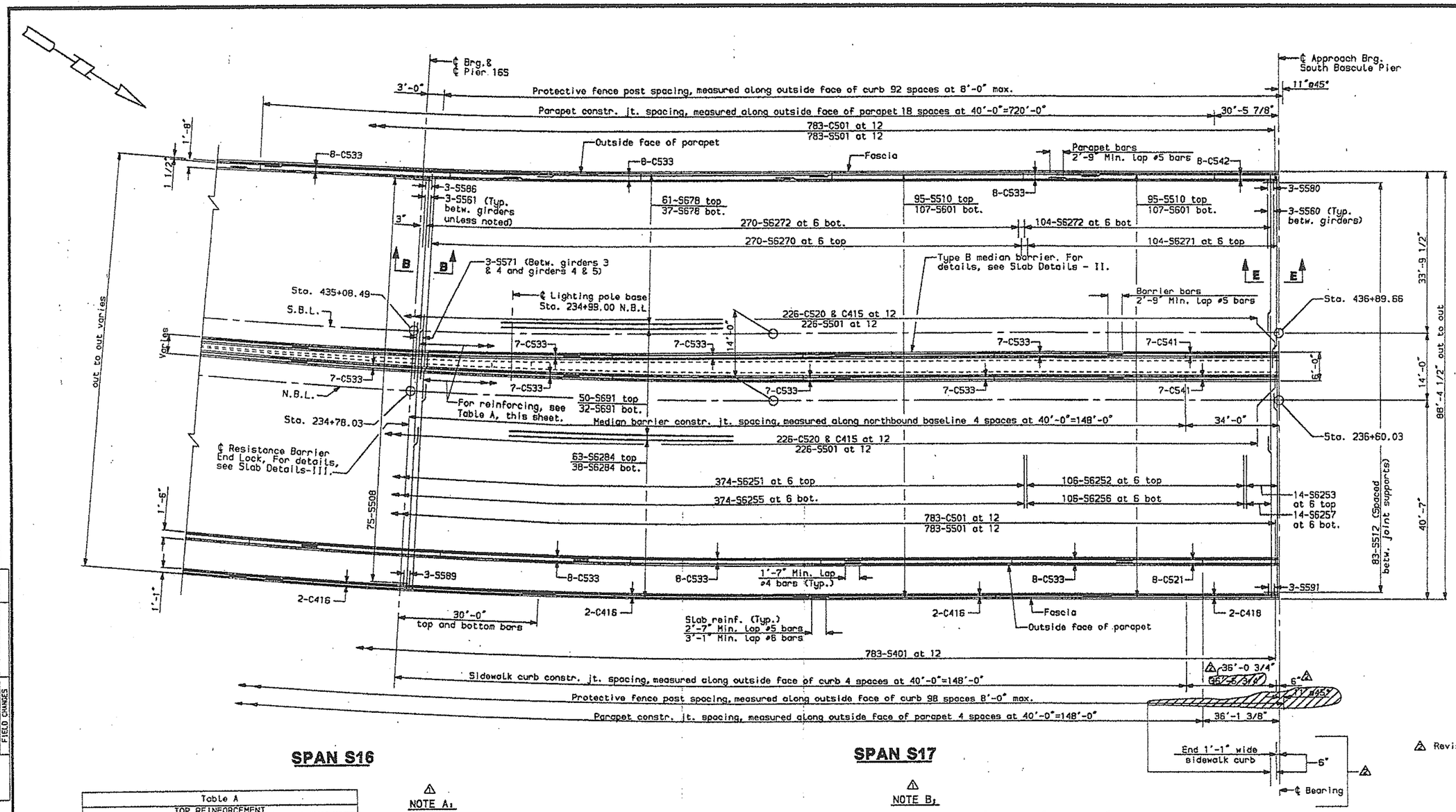

SPAN S16

SPAN S17

Table A		
TOP REINFORCEMENT		
MARK	NO.	LOCATION (ALONG S.B.L.)
S6258	153	STA. 433+18.35 TO STA. 433+91.61
S6259	124	STA. 433+91.61 TO STA. 434+50.996
S6260	269	STA. 434+50.996 TO STA. 435+79.659
S6261	211	STA. 435+79.659 TO STA. 436+84.624
S6262	14	STA. 436+84.624 TO STA. 436+91.67
BOTTOM REINFORCEMENT		
MARK	NO.	LOCATION (ALONG S.B.L.)
S6263	153	STA. 433+18.35 TO STA. 433+91.61
S6264	124	STA. 433+91.61 TO STA. 434+50.996
S6265	120	STA. 434+50.996 TO STA. 435+08.49
S6266	149	STA. 435+08.49 TO STA. 435+79.659
S6267	211	STA. 435+79.659 TO STA. 436+84.624
S6268	14	STA. 436+84.624 TO STA. 436+91.67

△ NOTE A:

Install one 8" deep by 8" high by 18" long outside flanged recessed cover galvanized iron junction box (NEMA 4) in the east parapet at Sta. 234+73.03 and one at Sta. 234+83.03. Center junction boxes in upper sloping face of east parapet.

One 2" diameter galvanized rigid steel conduit will exit the south and north end of each junction box. See drawing CONDUIT LAYOUT PLAN - GATES AND SIGNALS.

Additionally, one 2" diameter galvanized rigid steel conduit will sweep out of the north end of the southerly junction box and exit the bottom of the slab at Sta. 234+78.03 and be stubbed-off with a threaded end 3" beneath the slab, and one 2" diameter galvanized rigid steel conduit will sweep out of the south end of the northerly junction box and exit the bottom of the slab at Sta. 234+78.03 and be stubbed-off with a threaded end 3" beneath the slab. These conduits will be extended to the traffic gate in a future contract.

One 3/4" diameter conduit for drainage will exit the low end of each junction box and extend to 2" beneath the slab.

△ NOTE B:

Install one 8" deep by 8" high by 18" long outside flanged recessed cover galvanized iron junction box (NEMA 4) in the west parapet at Sta. 234+73.03 and one at Sta. 234+83.03. Center junction boxes in upper sloping face of west parapet.

One 2" diameter galvanized rigid steel conduit will exit the north end of each junction box. See drawing CONDUIT LAYOUT PLAN - GATES AND SIGNALS.

Additionally, one 2" diameter galvanized rigid steel conduit will sweep out of the north end of the southerly junction box and exit the bottom of the slab at Sta. 234+78.03 and be stubbed-off with a threaded end 3" beneath the slab, and one 2" diameter galvanized rigid steel conduit will sweep out of the south end of the northerly junction box and exit the bottom of the slab at Sta. 234+78.03 and be stubbed-off with a threaded end 3" beneath the slab. These conduits will be extended to the traffic gate in a future contract.

One 3/4" diameter conduit for drainage will exit the low end of each junction box and extend to 2" beneath the slab.

△ Revised, 10-07-94

△ Revised sheet as of 12/28/

PROJECT DESIGN ENGINEER	BY	DATE
DESIGN-DETAILED	MCI	5-94
CHECKED	EAR, DTP	6-94
REVISION	CJB	10-94
FIELD CHANGES	MCI	12-94

PLANS

12-28-94
sl_s14s17-3.rev

SOUTH APPROACH SP

STATE OF MAINE
DEPARTMENT OF TRANSPORTAT

PORTLAND - S. PORTLAND
OVER FORE RIVER
CUMBERLAND COUN

SLAB PLAN
SPANS S14-S17

SHEET 135 OF 182 AUGUSTA, MAINE

F.H.W.A. REG. NO.	STATE	PROJEC
1	MAINE	DPI-0

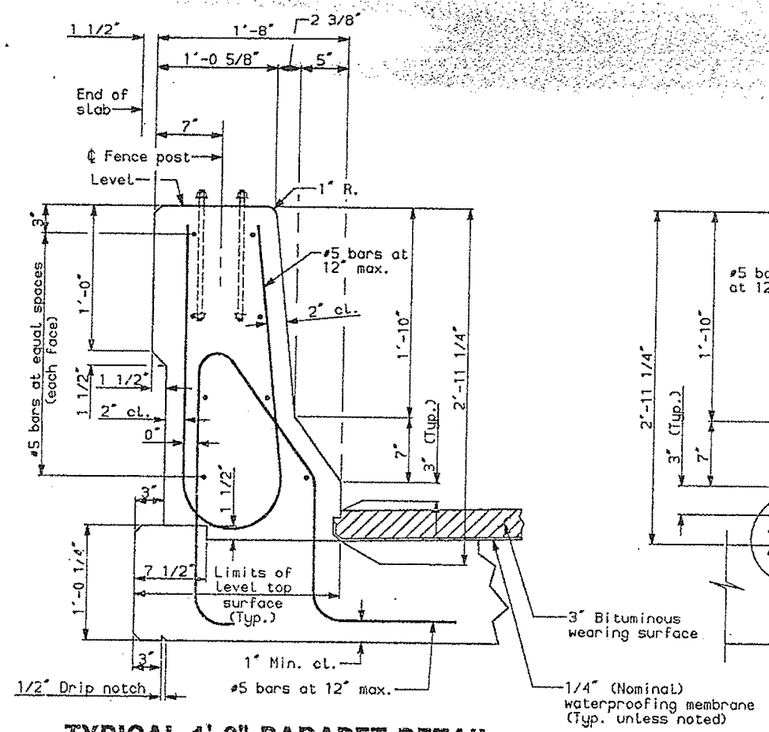

TYPICAL 1'-8" PARAPET DETAIL

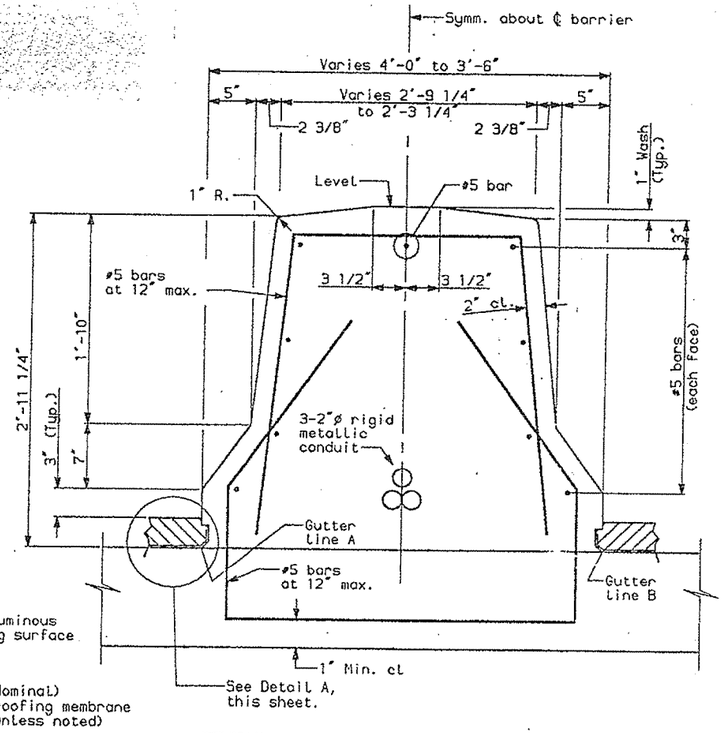

TYPE A MEDIAN BARRIER DETAIL

Sta. 206+41.00 to Sta. 206+89.91 (N.B.L.)
Sta. 212+24.29 to Sta. 234+39.77 (N.B.L.)

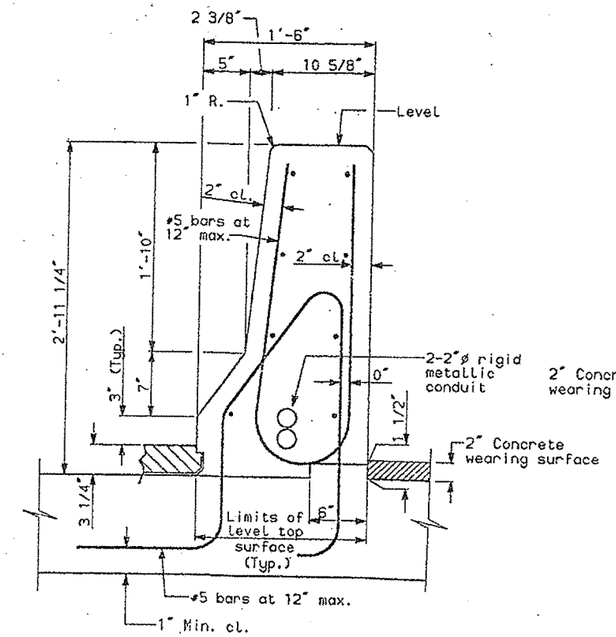

TYPICAL 1'-6" PARAPET DETAIL

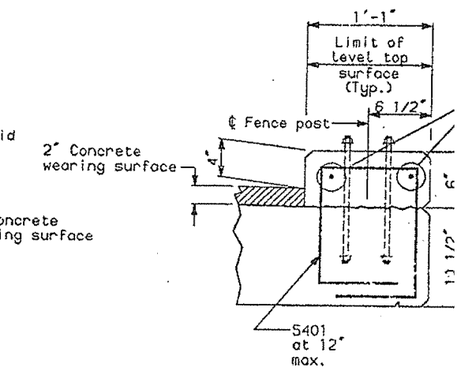

SIDEWALK CURB

Gutter line elevations A and B differ from each other between — Sta. 206+41.00 to Sta. 213+16.68 (N.B.L.); Sta. 406+71.12 to Sta. 413+55.49 (S.B.L.)

Gutter line elevations A and B are equal between — Sta. 213+16.68 to Sta. 236+60.03 (N.B.L.); Sta. 413+55.49 to Sta. 436+89.66 (S.B.L.)

Concrete to be bushed level under all lighting pole and sign structure base plates.

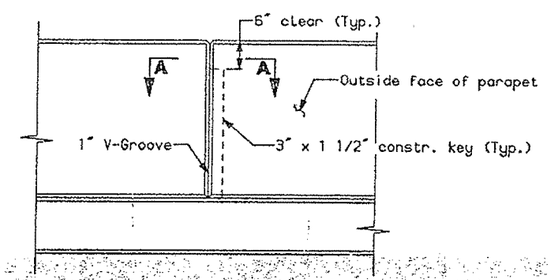

ELEVATION

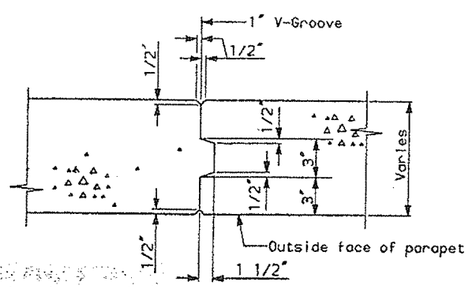

SECTION A-A

Note: 3" constr. key symm. about ℄ Type A median barrier

PARAPET/MEDIAN CONSTRUCTION JOINT DETAIL

Parapet shown, Type A median barrier similar

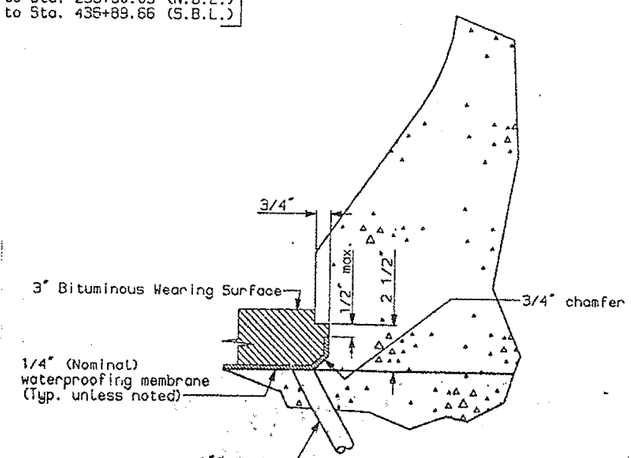

DETAIL A

For additional detail, see STANDARD DETAILS BD 521-89

PLANS	DETAIL	HCI	DTP	6-94
	CHECKED	HCB		
	REVISION			
	FIELD CHANGES			

sa.sl.det-1

SOUTH APPROACH

STATE OF MAINE
DEPARTMENT OF TRANSPOR

PORTLAND - S. PORTLA
OVER FORE RIV
CUMBERLAND CO

SLAB DETAILS

SHEET 136 OF 182 AUGUSTA, MAI

F.H.W.A. REG. NO.	STATE	PROJECT
1	MAINE	DPI-005

Note B: The contractor may substitute a precast cover for the median barrier with prior approval of the engineer, and at no additional cost to the Department.

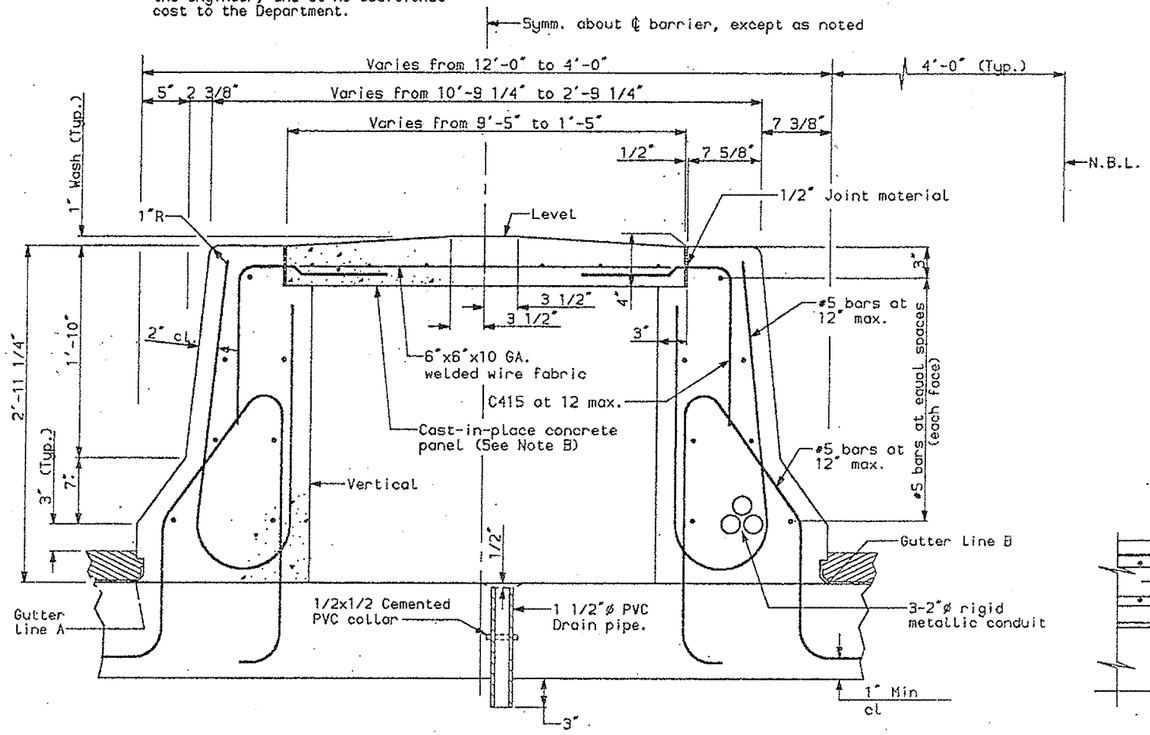

TYPICAL TYPE B MEDIAN BARRIER DETAIL

Sta. 206+89.91 to Sta. 212+24.28 (N.B.L.)
Sta. 234+39.77 to Sta. 236+60.03 (N.B.L.)

Gutter line elevations A and B differ from each other between — Sta. 206+41.00 to Sta. 213+16.68 (N.B.L.); Sta. 406+71.12 to Sta. 413+55.49 (S.B.L.)

Gutter line elevations A and B are equal between — Sta. 213+16.68 to Sta. 236+60.03 (N.B.L.); Sta. 413+55.49 to Sta. 436+89.66 (S.B.L.)

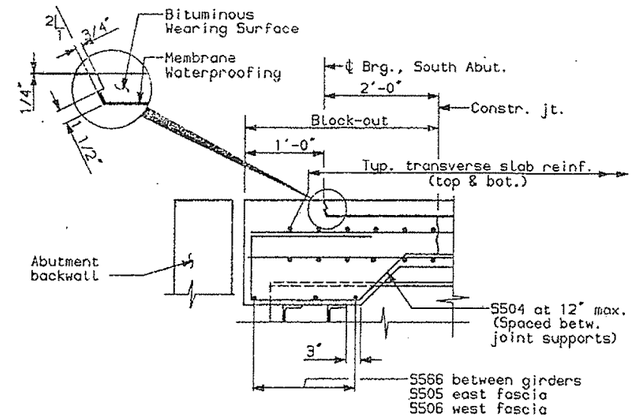

SECTION A-A

(Joint details have been omitted for clarity)

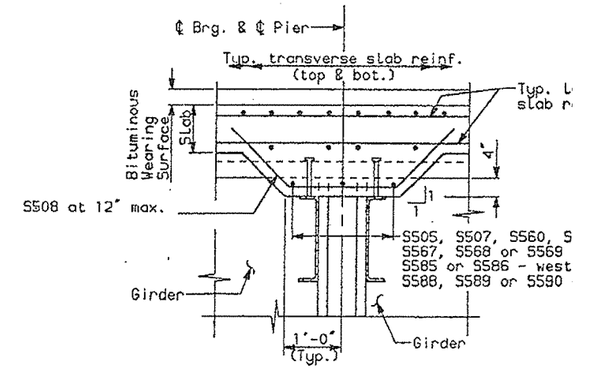

SECTION B-B

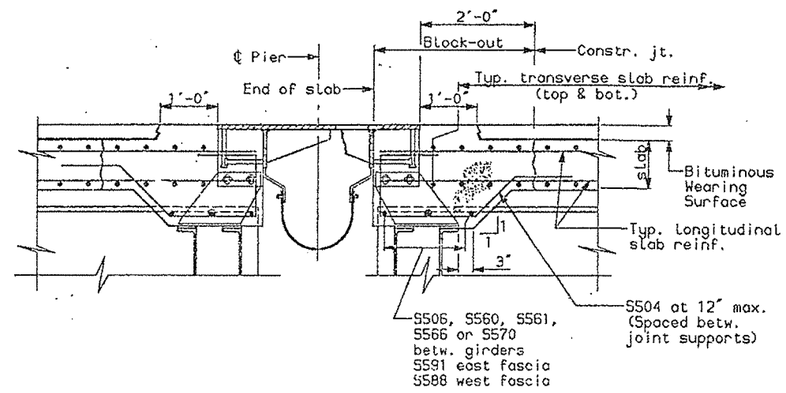

SECTION C-C

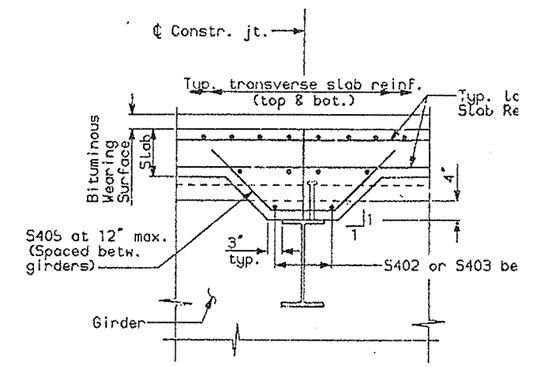

SECTION D-D

(For staged deck placement only)

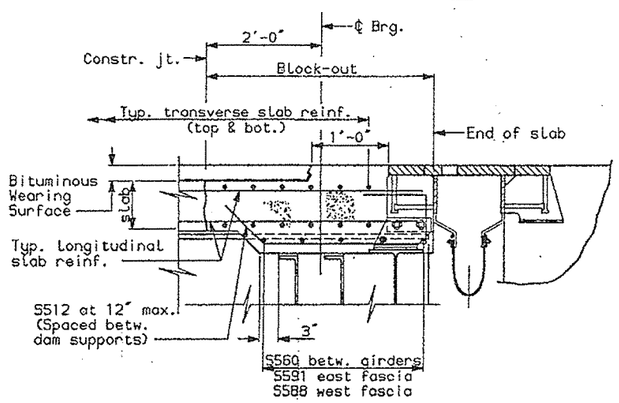

SECTION E-E

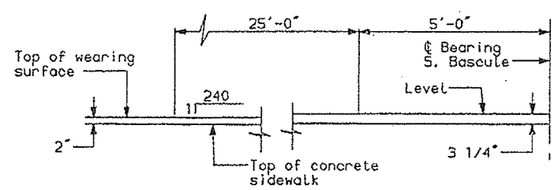

ELEVATION

SIDEWALK TRANSITION AT SPAN S17

DEL.	TAILED	21	12	6-5
CHECKED		HCB & CJB		6-94
REVISION				
FIELD CHANGES				

PLANS

sa.sl.det-2

SOUTH APPROACH

STATE OF MAINE
DEPARTMENT OF TRANSPO

PORTLAND - S. PORTLA
OVER FORE RIV
CUMBERLAND CO

SLAB DETAILS

SHEET 137 OF 182 AUGUSTA, MA

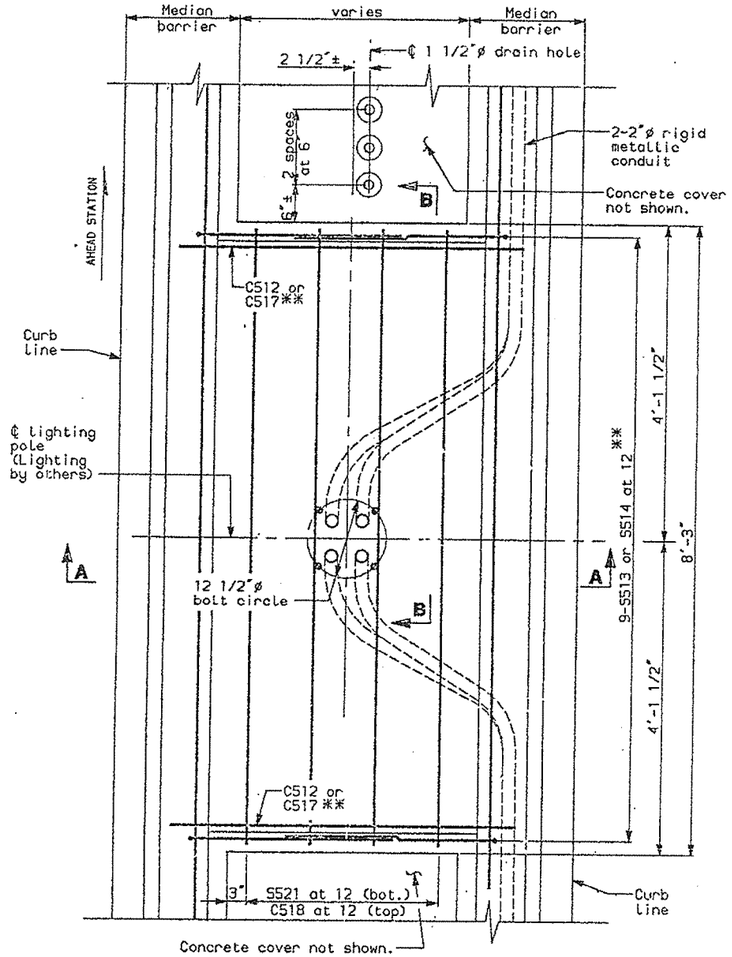

PLAN OF LIGHTING POLE BASE AT DIVIDED MEDIAN BARRIERS

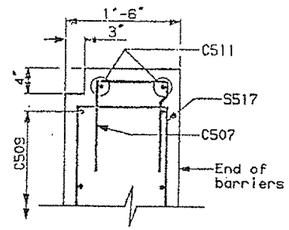

SECTION C-C

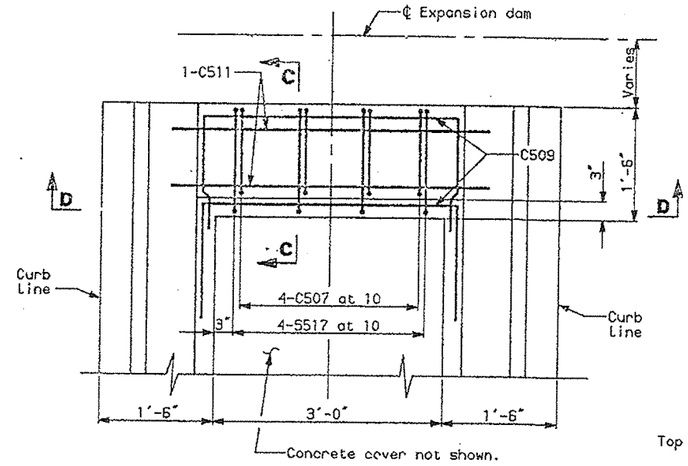

PLAN OF DIVIDED MEDIAN BARRIERS AT EXPANSION JOINTS

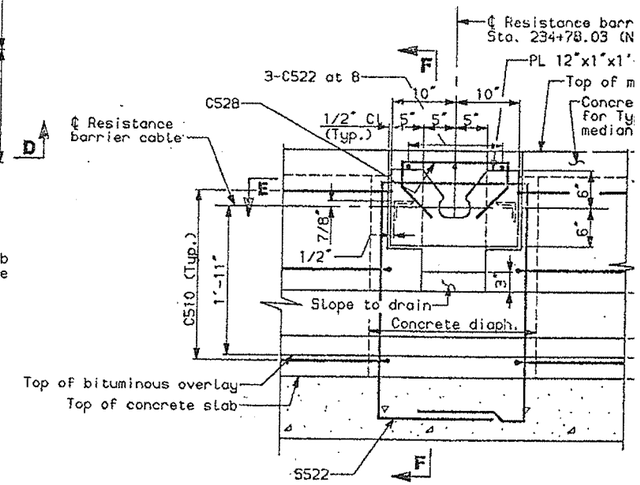

ELEVATION OF RESISTANCE BARRIER END LOCK

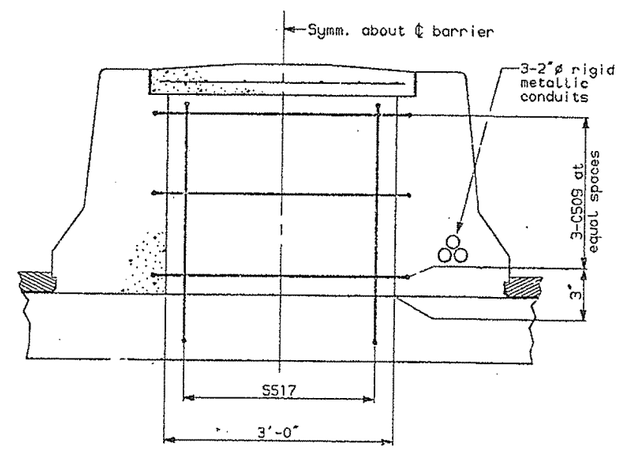

SECTION D-D

⚠ Cutout geometry for 12"x1"x1'-8" plate to be in accordance with traffic gate manufacture's requirements (Typ.)

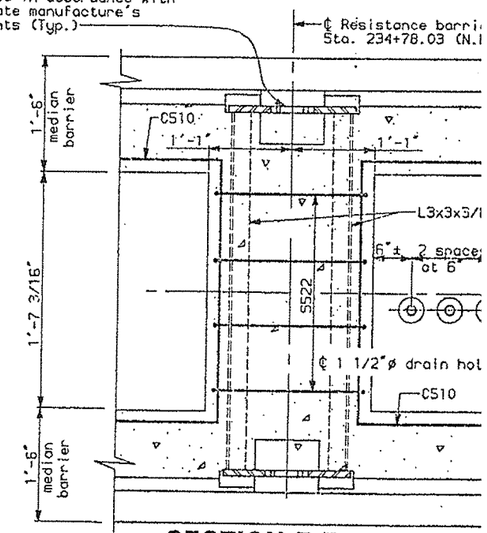

SECTION E-E

* AASHTO M270 (ASTM A709), Grade 36.

** C512 and S513 are used in diaphragms for lighting poles at Sta. 211+46.00 (N.B.L.) and Sta. 234+99.00 (N.B.L.).
C517 and S514 are used in diaphragms for lighting poles at Sta. 207+73.00 (N.B.L.) and Sta. 209+65.00 (N.B.L.)

Concrete to be bushed level under all lighting and sign structure base plates.

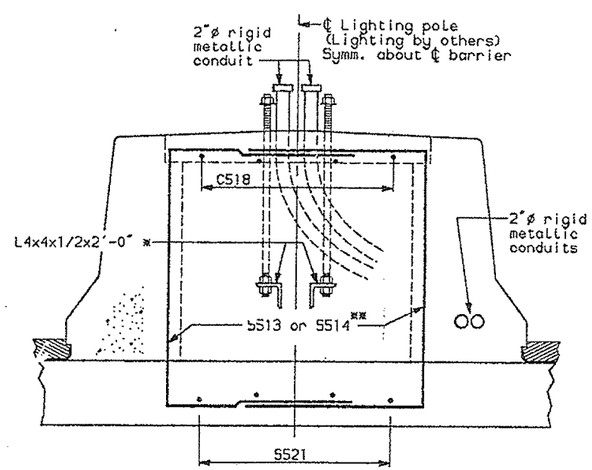

SECTION A-A

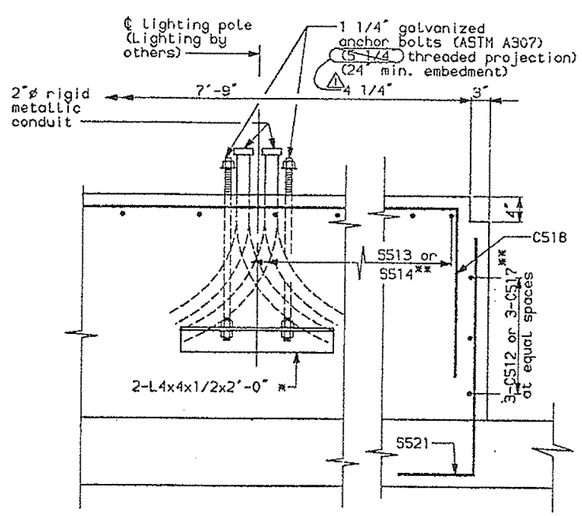

SECTION B-B

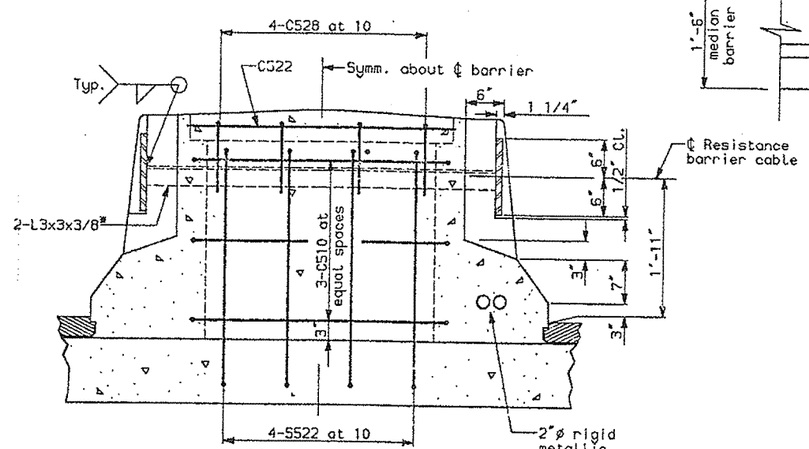

SECTION F-F

⚠ Revised per Addendum No. 2.

F.H.W.A. REG. NO.	STATE	PROJECT NO.
1	MAINE	DPI-0068 (

SOUTH APPROACH SI
STATE OF MAINE
DEPARTMENT OF TRANSPORTA

PORTLAND - S. PORTLAN
OVER FORE RIVE
CUMBERLAND COU

SLAB DETAILS

SHEET 138 OF 182 AUGUSTA, MAINE

REVISION	CHECKED	HCS	8
FIELD CHANGES		MCI	10-94

PLANS

sa.sl.dat-3

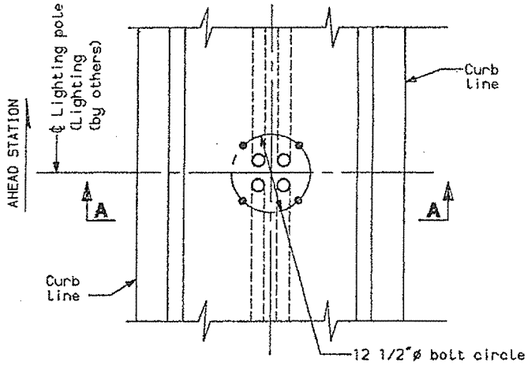

LIGHTING POLE MOUNTING SUPPORT DETAILS AT 3'-6" MEDIAN BARRIER

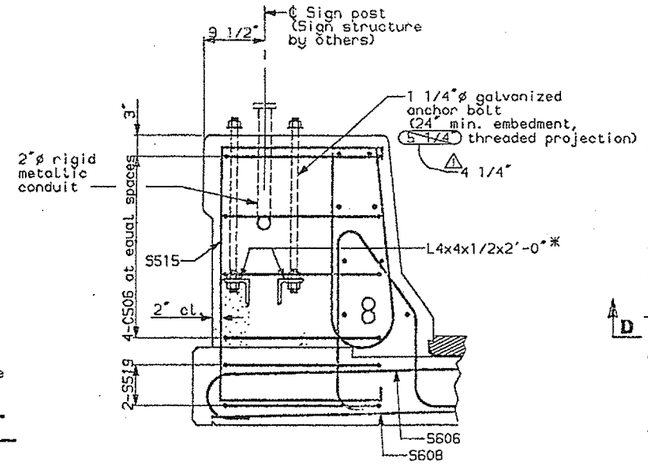

SECTION D-D

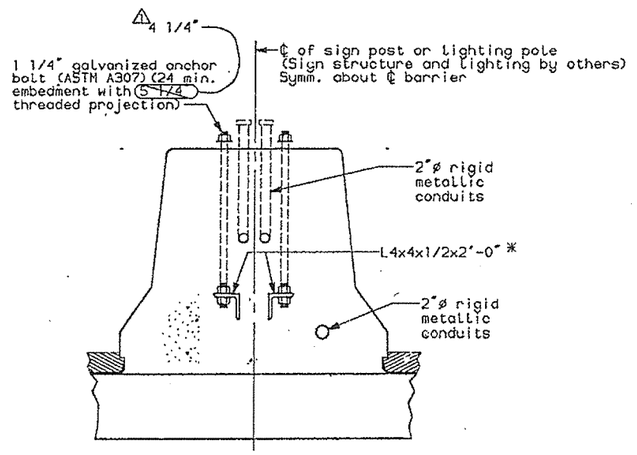

SECTION A-A

(Lighting conduits shown; sign structure conduit similar)

* AASHTO M270 (ASTM A709), Grade 36

Concrete to be bushed level under all lighting pole and sign structure base plates.

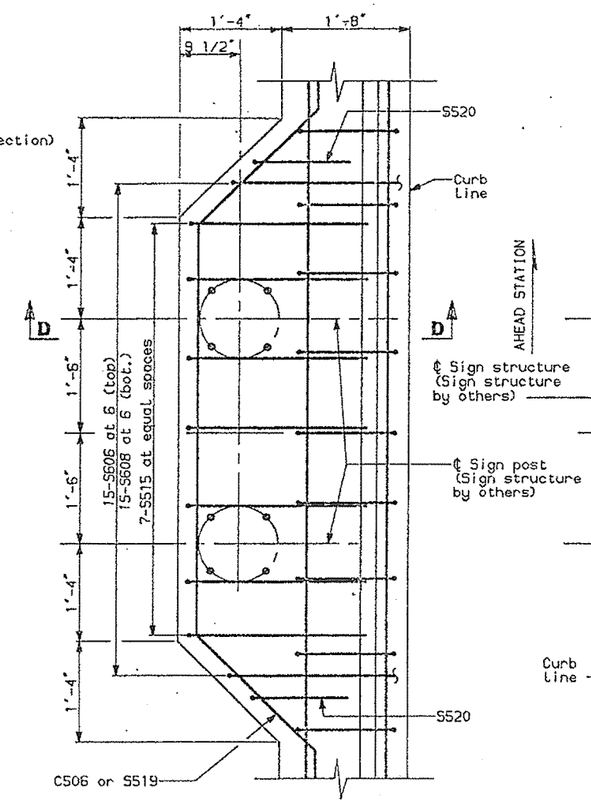

AT 1'-8" PARAPET

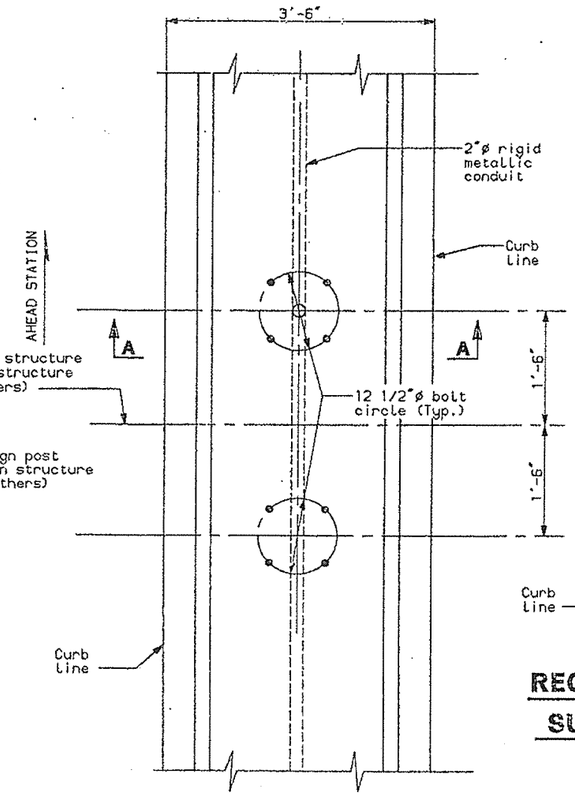

AT MEDIAN BARRIER

SIGN STRUCTURE MOUNTING SUPPORT DETAILS

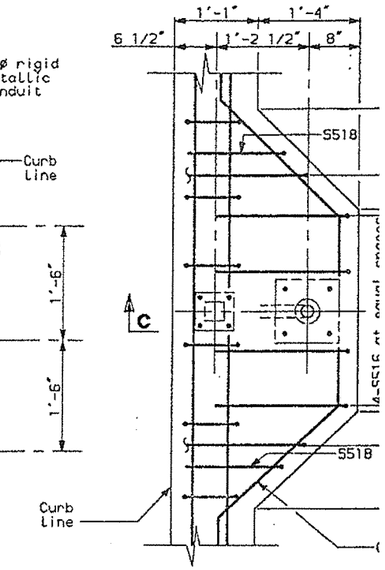

REGULATORY SIGN MOU SUPPORT DETAILS AT

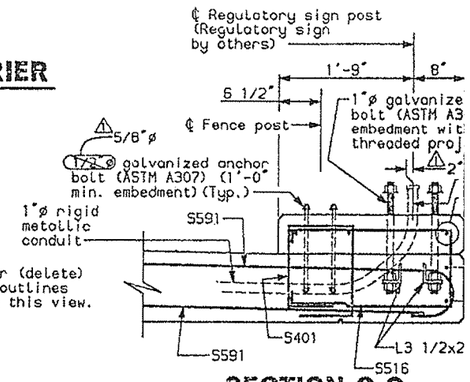

SECTION C-C

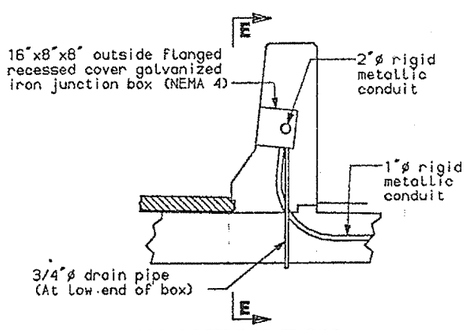

JUNCTION BOX

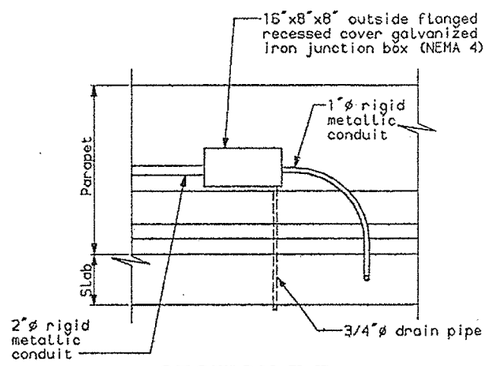

SECTION E-E

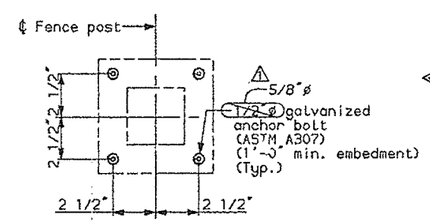

FENCE POST ANCHOR BOLT LAYOUT

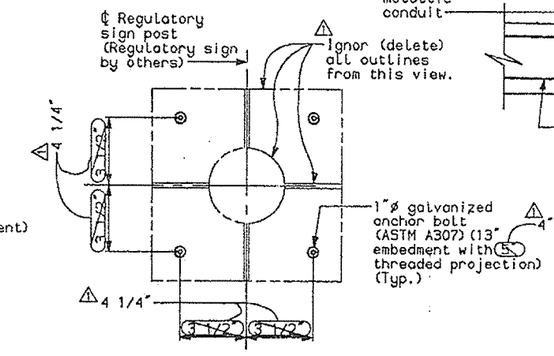

REGULATORY SIGN POST ANCHOR BOLT LAYOUT

⚠ Revised per Addendum No. 2.

F.H.W.A. REG. NO.	STATE	PROJECT N
1	MAINE	DPI-0068

SOUTH APPROACH

STATE OF MAINE
DEPARTMENT OF TRANSPOR

PORTLAND - S. PORTLA
OVER FORE RIV
CUMBERLAND CO

SLAB DETAILS

SHEET 139 OF 182 AUGUSTA, MAI

PLANS

DES	TAILED	21	1	6-1
CHECKED		HCB and CJB		6-94
REVISION		MCI		10-94
FIELD CHANGES				

sa.sl.det-4

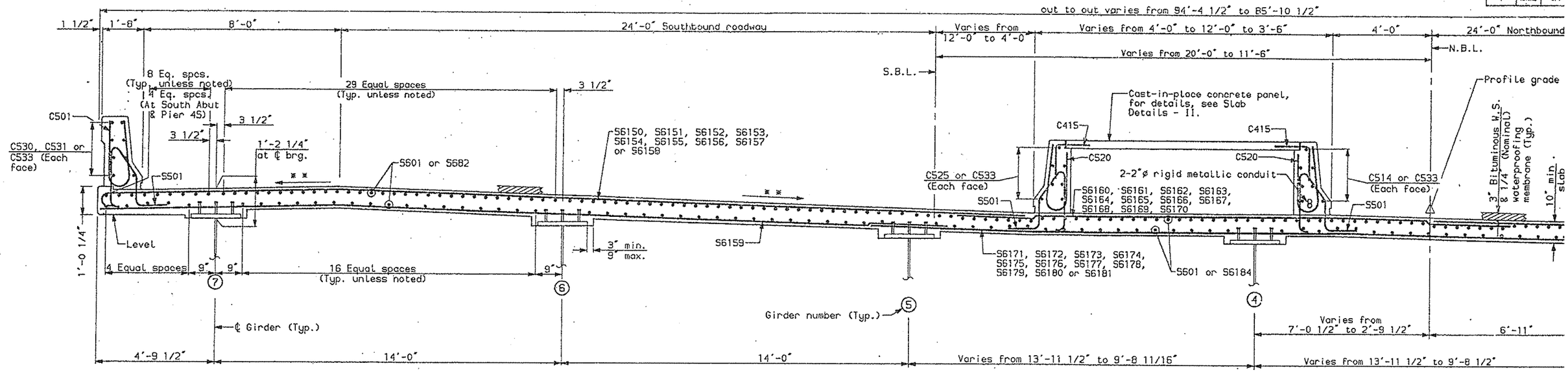

TYPICAL CROSS SECTION

N.B.L. sta. 206+41.00 to sta. 213+16.68
S.B.L. sta. 406+71.12 to sta. 413+55.49

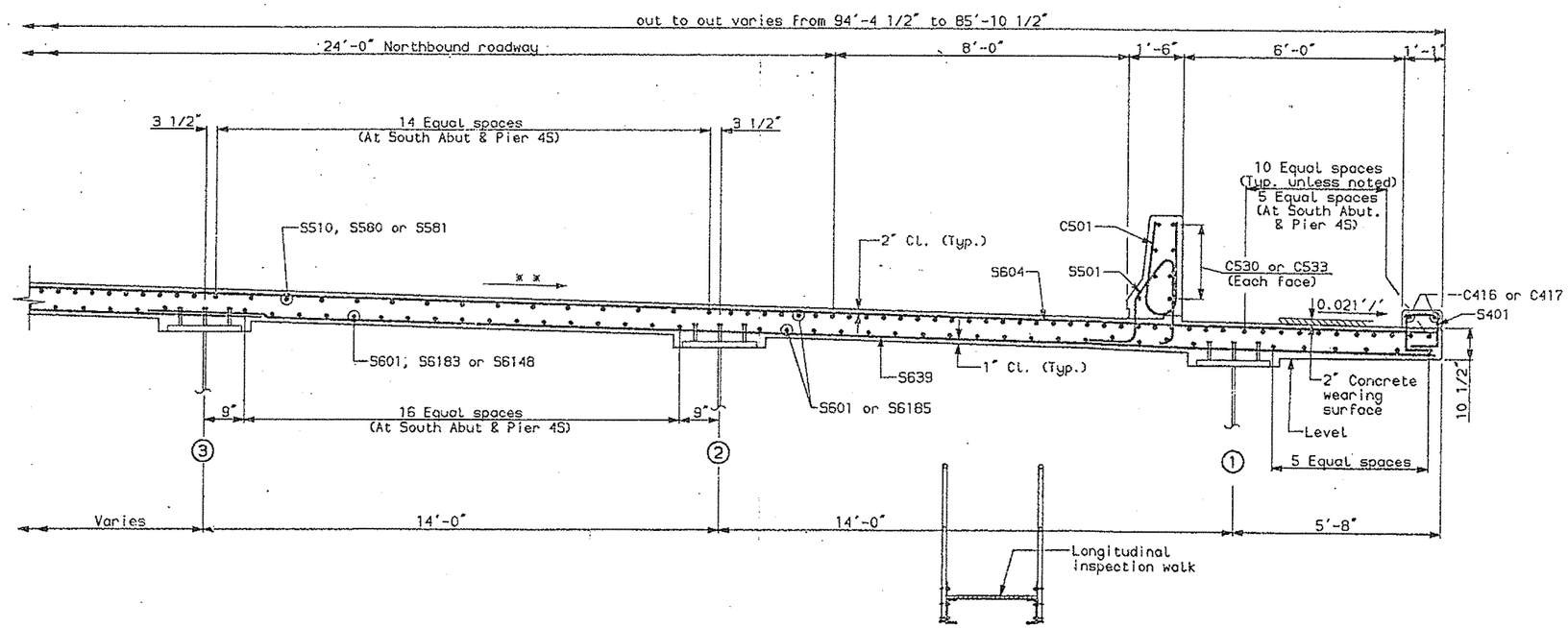

* * For roadway and shoulder
see Method of Superelevat

F.H.W.A. REG. NO.	STATE	PROJ
1	MAINE	DPI-

CT DE.	GINEE			
DESIGN-DETAILED	MCI	EAR, DTP	6-94
CHECKED	CJB		6-94
REVISION			
FIELD CHANGES			

PLANS

4-4-94

SOUTH APPROACH

STATE OF MAI
DEPARTMENT OF TRANS

PORTLAND - S. PORTL
OVER FORE R
CUMBERLAND C

SOUTH APPR
SLAB CROSS SE

SHEET 140 OF 182 AUGUSTA, M

F.H.W.A. REG. NO.	STATE	PROJECT
1	MAINE	DPI-006

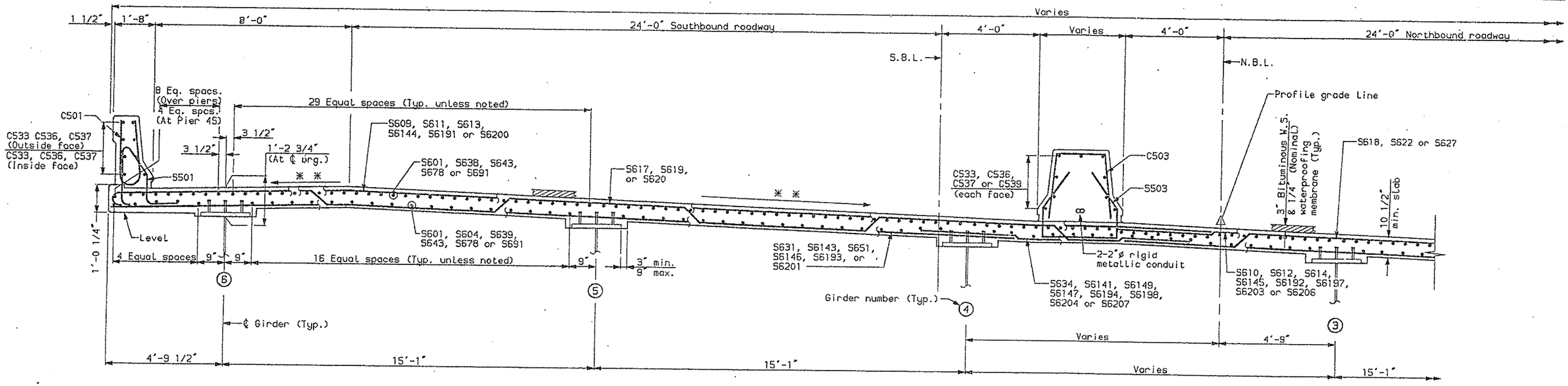

TYPICAL CROSS SECTION

N.B.L. sta. 213+16.68 to sta. 220+00.00
S.B.L. sta. 413+55.49 to sta. 420+43.63

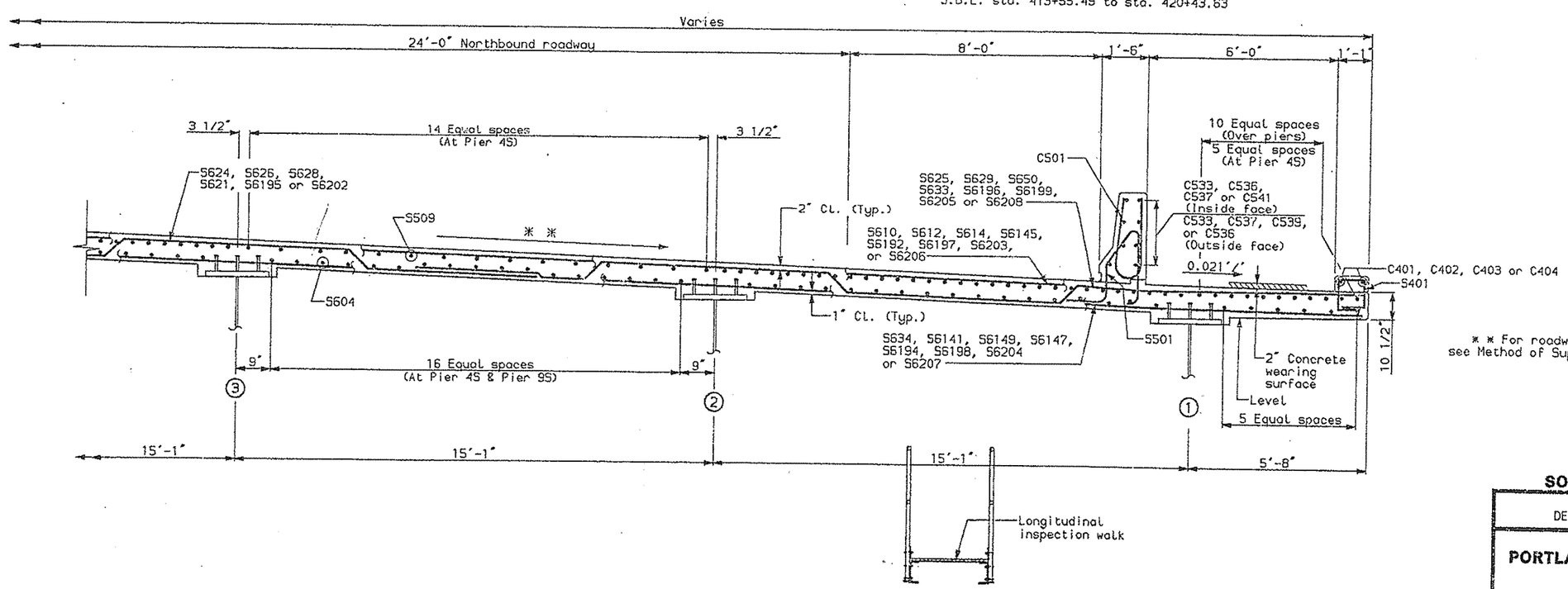

* * For roadway and shoulder cros
see Method of Superelevation sheets.

DETAIL	MCI	JTP	6
CHECKED	KGB		C-94
REVISION			
FIELD CHANGES			

PLANS

SOUTH APPROACH S

STATE OF MAINE
DEPARTMENT OF TRANSPOR

PORTLAND - S. PORTLAI
OVER FORE RIVI
CUMBERLAND COU

SOUTH APPRO
SLAB CROSS SECT

SHEET 141 OF 182 AUGUSTA, MAIN

03.sd2

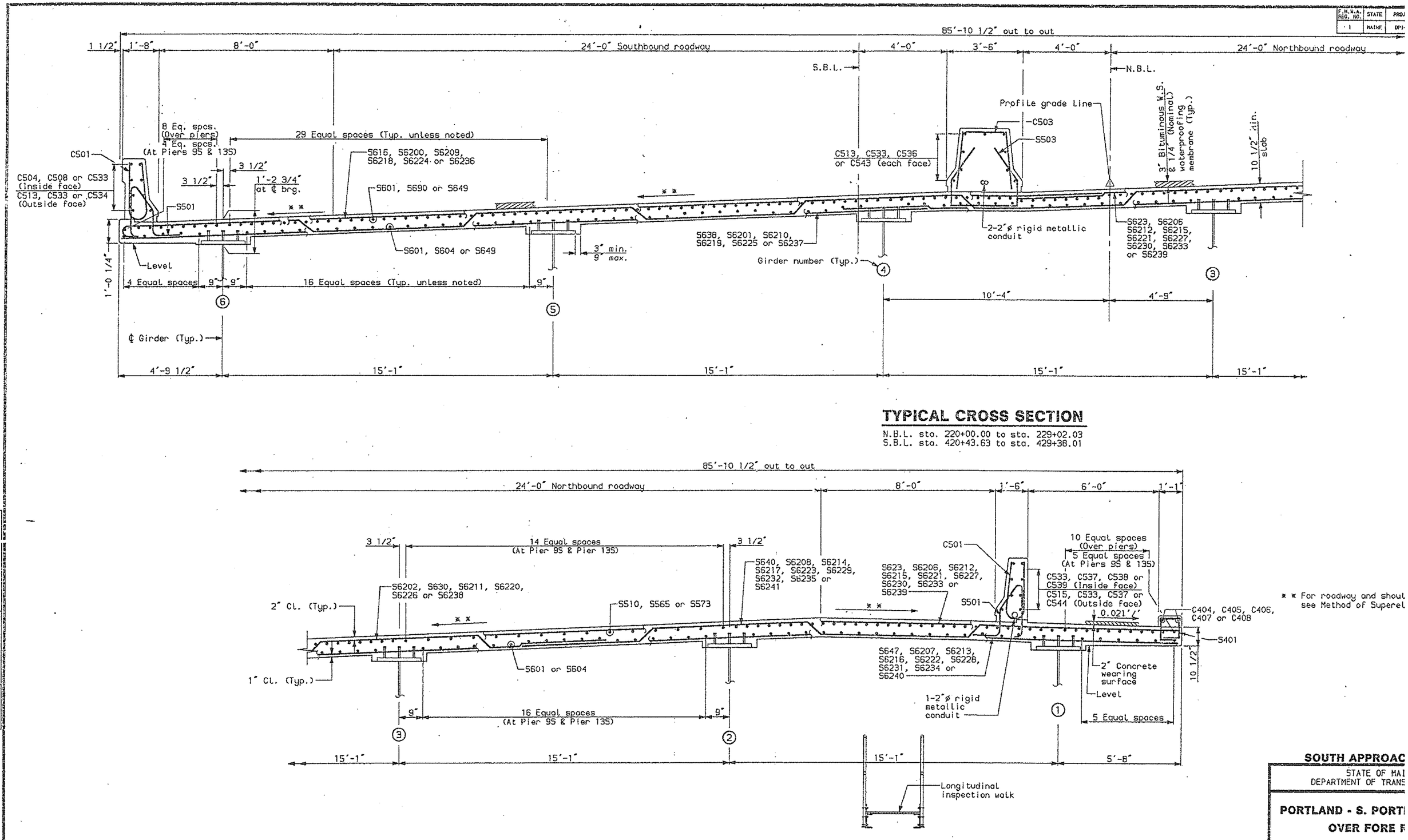

TYPICAL CROSS SECTION

N.B.L. sta. 220+00.00 to sta. 229+02.03
S.B.L. sta. 420+43.63 to sta. 429+38.01

* * For roadway and shoul
see Method of Superel

F.H.W.A. REG. NO.	STATE	PROJ
1	MAINE	DPI

PROJECT	DESIGN ENGINEER	BY	DATE
PLANS	DESIGN-DETAILED	MCI	6-94
	CHECKED	EAR, DTP	6-94
	REVISION	HCB	
	FIELD CHANGES		

SOUTH APPROAC
STATE OF MAI
DEPARTMENT OF TRANS

PORTLAND - S. PORT
OVER FORE R
CUMBERLAND C

SOUTH APPR
SLAB CROSS SE

SHEET 142 OF 182 AUGUSTA,

F.H.W.A. REG. NO.	STATE	PROJ
1.	MAINE	DPI-

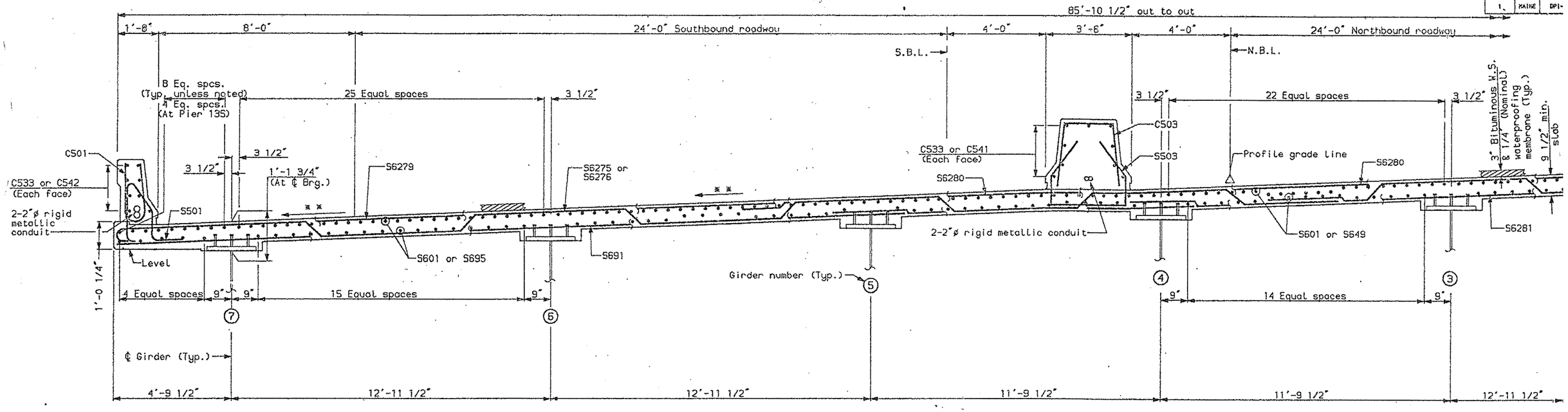

TYPICAL CROSS SECTION

N.B.L. sta. 229+02.03 to sta. 232+86.03
S.B.L. sta. 429+38.01 to sta. 433+18.35

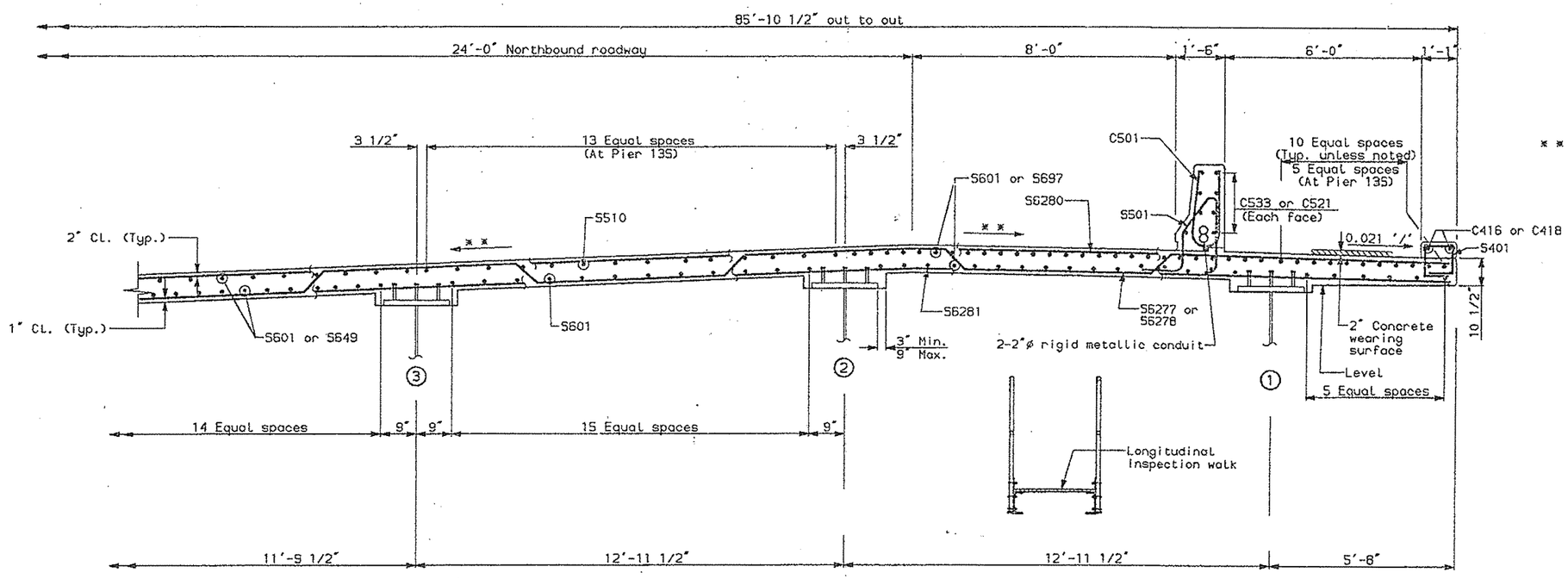

** For roadway and shoulder cro
see method of superelevation

Project:	DESIGN ENGINEER	BY	DATE
	DESIGN-DETAILED	MCI	6-94
	CHECKED	CJB	6-94
PLANS	REVISION		
	FIELD CHANGES		

4-4-94

cs.sa4

SOUTH APPROAC

STATE OF MAI
DEPARTMENT OF TRANS

PORTLAND - S. PORTI
OVER FORE R
CUMBERLAND C

SOUTH APPR
SLAB CROSS SE

SHEET 143 OF 182 AUGUSTA,

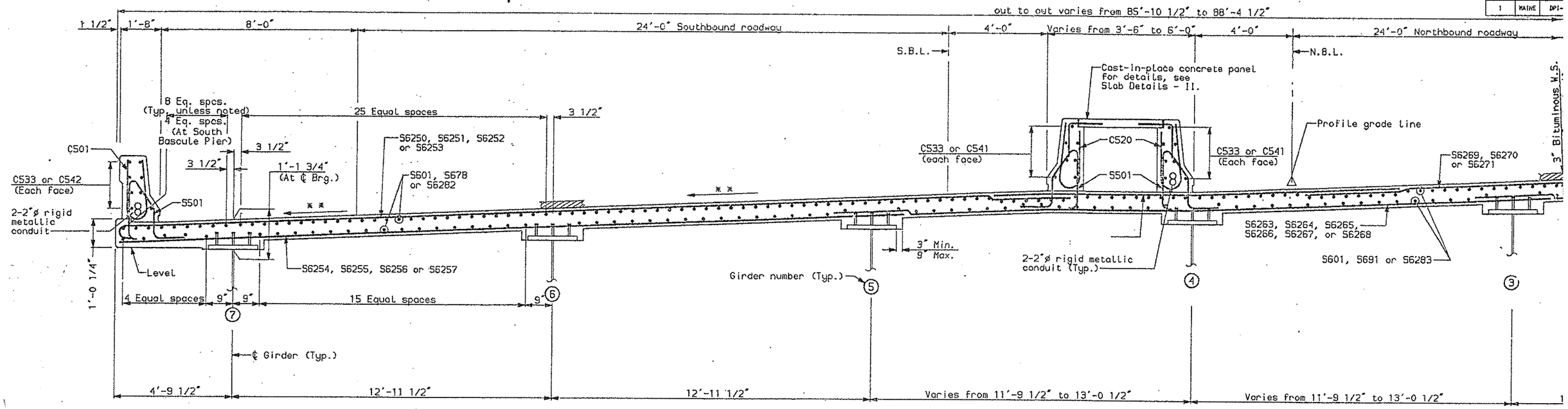

TYPICAL CROSS SECTION

N.B.L. Sta. 232+86.03 to Sta. 236+60.03
S.B.L. Sta. 433+18.35 to Sta. 436+89.66

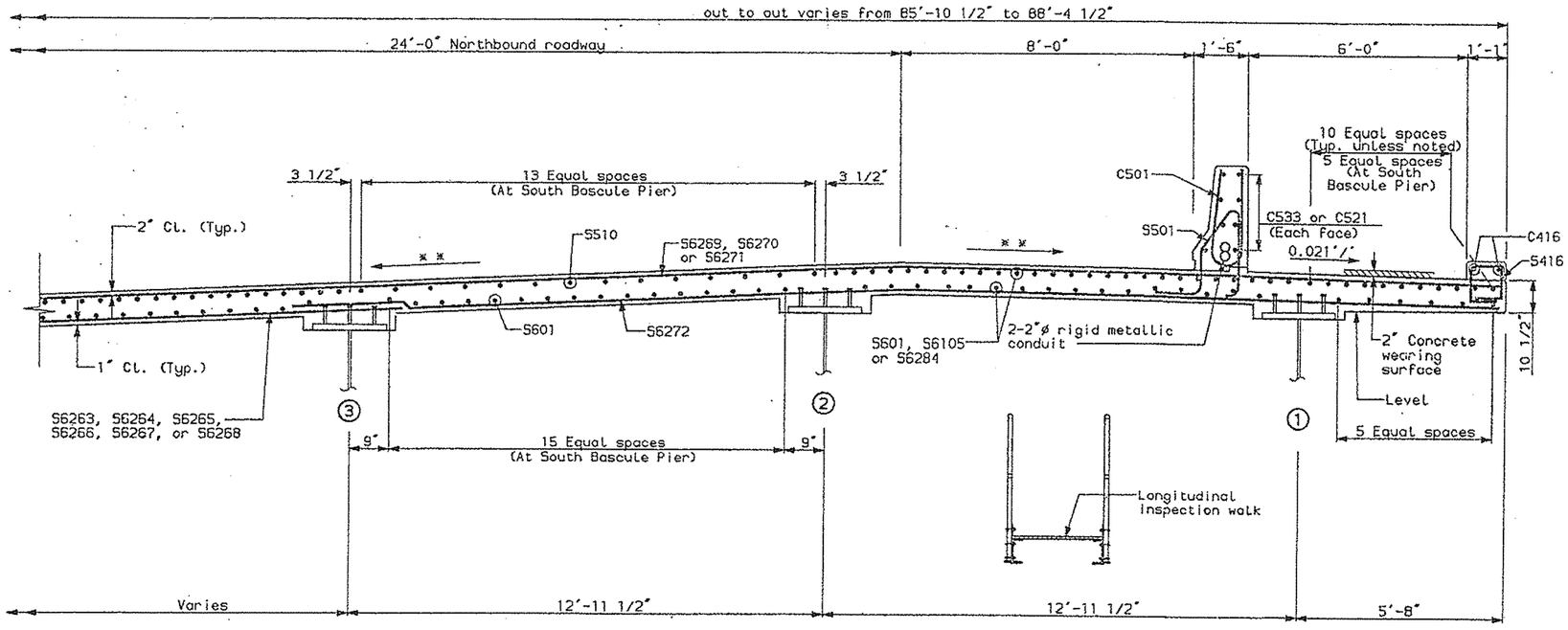

* * For roadway and shoulder cros
see method of superelevation

F.H.W.A. REG. NO.	STATE	PROJ
1	MAINE	DPI-

DES.	NEER	BY		LA
DESIGN-DETAILED	MCI	EAR, DTP		6-94
CHECKED		CJG		6-94
REVISION				
FIELD CHANGES				

PLANS

4-4-94

cs.sa5

SOUTH APPROACH

STATE OF MAIN
DEPARTMENT OF TRANSP

PORTLAND - S. PORTL
OVER FORE R
CUMBERLAND C

SOUTH APPR
SLAB CROSS SE

SHEET 144 OF 182 AUGUSTA, M

F.H.W.A. REG. NO.	STATE	PROJECT NO.
1	MAINE	DPI-0029(C)

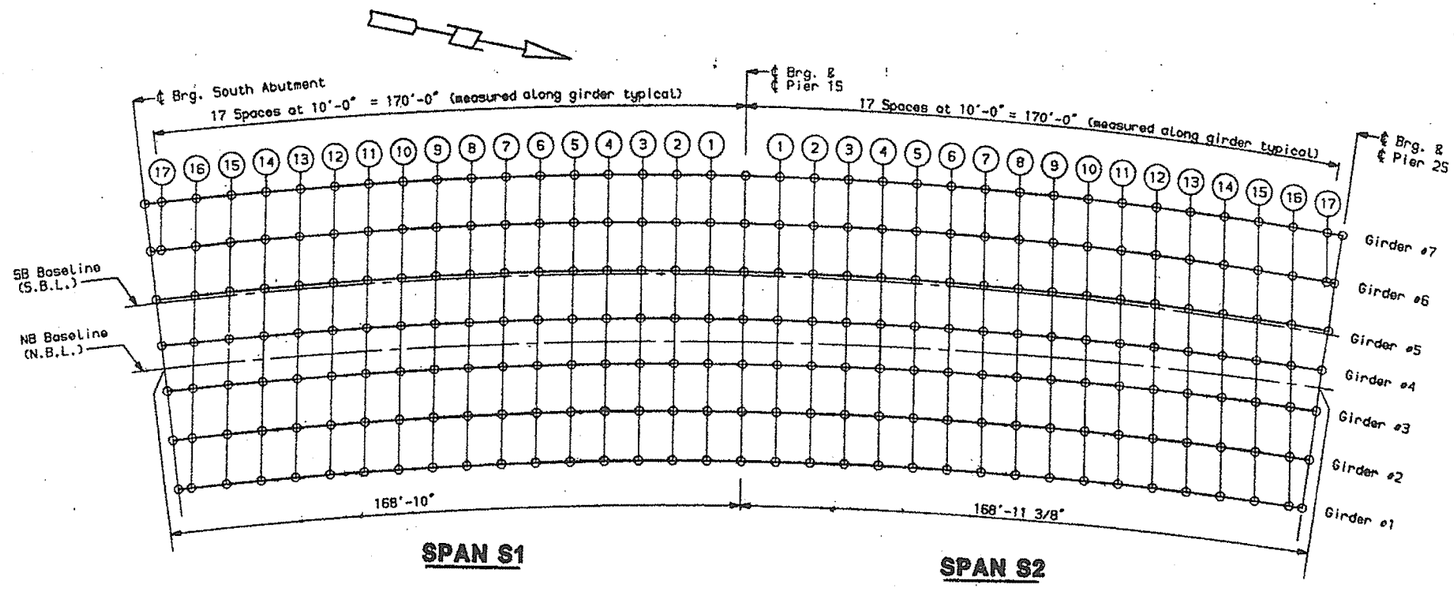

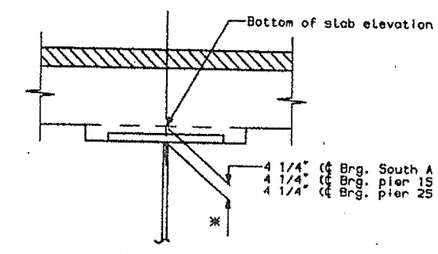

BLOCKING DETAIL

* Not to be used for setting forms.

BOTTOM OF SLAB ELEVATIONS SPAN S1

Slab Points		℄ Brg. So. Abut.	17	16	15	14	13	12	11	10	9	8	7	6	5	4	3	2	1	℄ Brg. Pier 1S
Girders	7	26.90	27.09	27.43	27.77	28.09	28.38	28.65	28.89	29.11	29.31	29.49	29.64	29.78	29.91	30.03	30.15	30.28	30.42	30.57
	6	26.66	26.78	27.14	27.48	27.80	28.10	28.37	28.63	28.85	29.05	29.23	29.39	29.53	29.66	29.78	29.90	30.03	30.17	30.33
	5	26.13		26.54	26.89	27.22	27.53	27.81	28.06	28.29	28.50	28.68	28.84	28.98	29.11	29.23	29.35	29.48	29.62	29.78
	4	25.59		25.95	26.31	26.65	26.97	27.27	27.55	27.79	28.02	28.22	28.40	28.56	28.71	28.85	28.99	29.13	29.30	29.47
	3	25.18		25.47	25.83	26.17	26.50	26.80	27.09	27.34	27.57	27.78	27.96	28.12	28.27	28.42	28.56	28.71	28.88	29.06
	2	24.64		24.87	25.23	25.58	25.91	26.22	26.50	26.76	27.00	27.21	27.40	27.57	27.72	27.87	28.02	28.17	28.34	28.53
	1	24.14		24.29	24.65	25.00	25.34	25.65	25.94	26.20	26.45	26.66	26.86	27.03	27.19	27.35	27.50	27.66	27.83	28.02

BOTTOM OF SLAB ELEVATIONS SPAN S2

Slab Points		℄ Brg. Pier 1S	1	2	3	4	5	6	7	8	9	10	11	12	13	14	15	16	17	℄ Brg. Pier 2S
Girders	7	30.57	30.75	30.95	31.17	31.40	31.63	31.88	32.12	32.35	32.58	32.79	32.99	33.17	33.35	33.52	33.69	33.87	34.05	34.15
	6	30.33	30.51	30.71	30.93	31.17	31.41	31.66	31.90	32.14	32.36	32.57	32.77	32.96	33.13	33.31	33.48	33.66	33.85	33.92
	5	29.78	29.97	30.18	30.40	30.64	30.89	31.14	31.38	31.62	31.84	32.06	32.26	32.44	32.62	32.79	32.97	33.15		33.38
	4	29.47	29.68	29.90	30.15	30.40	30.66	30.92	31.18	31.43	31.66	31.88	32.09	32.28	32.47	32.65	32.83	33.02		33.22
	3	29.06	29.27	29.50	29.74	30.00	30.26	30.53	30.78	31.03	31.27	31.49	31.70	31.89	32.07	32.26	32.44	32.64		32.81
	2	28.53	28.74	28.97	29.22	29.48	29.74	30.01	30.27	30.52	30.75	30.98	31.18	31.38	31.57	31.75	31.94	32.14		32.27
	1	28.02	28.24	28.47	28.72	28.98	29.25	29.52	29.78	30.03	30.26	30.49	30.69	30.89	31.08	31.27	31.47	31.67		31.77

Note:
Bottom of slab elevations are computed for continuous placement of deck concrete.

⚠1 New sheet as of 12/28/94

PROJECT DESIGN ENGINEER	BY	DATE
DESIGN-DETAILED	JAB	6-94
CHECKED	JAB	6-94
REVISION	PDB	12-94
FIELD CHANGES	HCB	

PLANS

SOUTH APPROACH SP

STATE OF MAINE
DEPARTMENT OF TRANSPORTA

PORTLAND - S. PORTLAND
OVER FORE RIVER
CUMBERLAND COUN

BOTTOM OF SLAB ELEV
SPANS S1-S2

SHEET 145 OF 182 AUGUSTA, MAINE

sl_s1s2.rev

F.H.W.A. REG. NO.	STATE	PROJECT NUMBER
1	MAINE	[illegible]

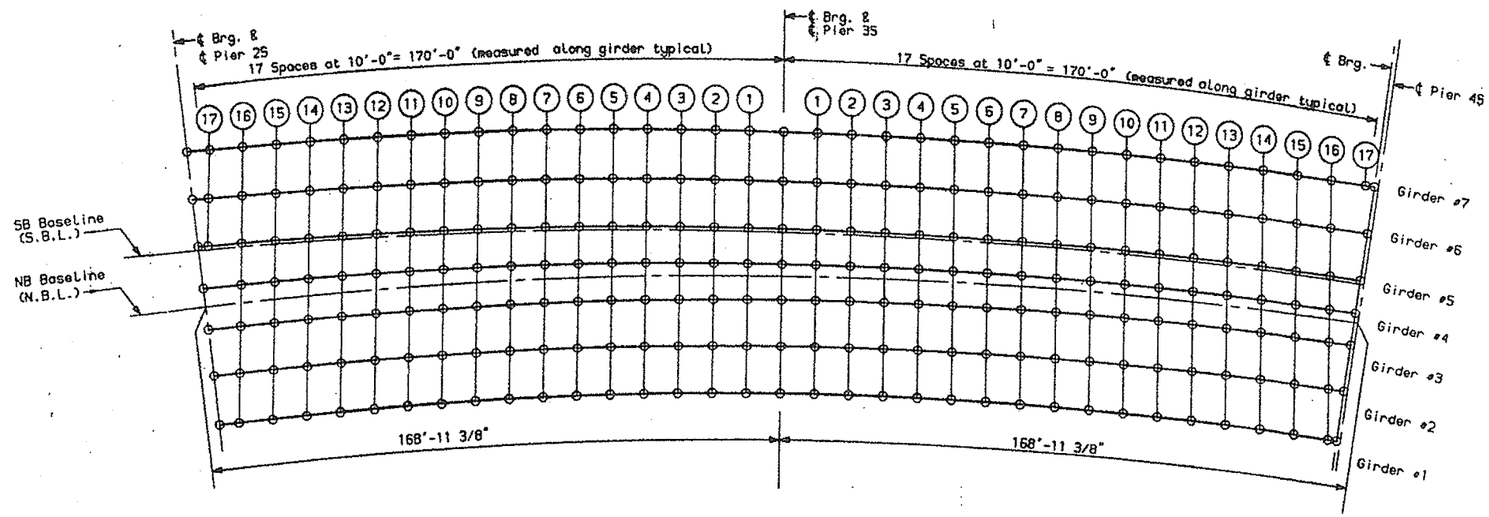

SPAN S3

SPAN S4

BOTTOM OF SLAB ELEVATIONS SPAN S3

Slab Points		℄ Brg. Pier 2S	17	16	15	14	13	12	11	10	9	8	7	6	5	4	3	2	1	℄ Brg. Pier 3S
Girders	7	34.15	34.25	34.46	34.69	34.92	35.16	35.39	35.62	35.83	36.03	36.21	36.39	36.55	36.71	36.88	37.05	37.23	37.43	37.65
	6	33.92	33.98	34.20	34.42	34.66	34.90	35.14	35.37	35.59	35.79	35.98	36.16	36.32	36.49	36.65	36.82	37.01	37.21	37.42
	5	33.38	33.41	33.63	33.87	34.11	34.36	34.60	34.84	35.06	35.26	35.46	35.64	35.81	35.97	36.14	36.31	36.49	36.69	36.91
	4	33.22		33.44	33.67	33.92	34.17	34.41	34.65	34.87	35.08	35.27	35.45	35.62	35.78	35.94	36.11	36.29	36.49	36.70
	3	32.81		32.99	33.23	33.47	33.72	33.97	34.21	34.43	34.64	34.84	35.03	35.20	35.36	35.53	35.70	35.88	36.09	36.30
	2	32.27		32.42	32.65	32.90	33.15	33.40	33.65	33.88	34.09	34.29	34.48	34.66	34.83	34.99	35.16	35.35	35.55	35.77
	1	31.77		31.87	32.11	32.35	32.61	32.86	33.11	33.34	33.56	33.77	33.96	34.14	34.31	34.48	34.65	34.84	35.04	35.26

BOTTOM OF SLAB ELEVATIONS SPAN S4

Slab Points		℄ Brg. Pier 3S	1	2	3	4	5	6	7	8	9	10	11	12	13	14	15	16	17	℄ Brg. Pier 4S
Girders	7	37.65	37.89	38.15	38.41	38.69	38.97	39.24	39.50	39.74	39.96	40.15	40.32	40.47	40.59	40.69	40.77	40.83	40.88	40.89
	6	37.42	37.67	37.92	38.19	38.47	38.75	39.02	39.28	39.52	39.73	39.93	40.10	40.24	40.36	40.46	40.54	40.60		40.66
	5	36.91	37.15	37.41	37.68	37.96	38.24	38.51	38.77	39.01	39.23	39.42	39.59	39.73	39.85	39.95	40.03	40.09		40.14
	4	36.70	36.94	37.19	37.46	37.74	38.02	38.28	38.54	38.78	38.99	39.18	39.35	39.49	39.61	39.71	39.78	39.85		39.89
	3	36.30	36.55	36.81	37.08	37.36	37.64	37.91	38.16	38.40	38.62	38.81	38.98	39.12	39.24	39.34	39.42	39.49		39.52
	2	35.77	36.02	36.28	36.55	36.83	37.11	37.38	37.64	37.88	38.09	38.28	38.45	38.60	38.72	38.82	38.90	38.96		38.99
	1	35.26	35.51	35.77	36.05	36.33	36.61	36.88	37.14	37.37	37.59	37.78	37.95	38.09	38.21	38.31	38.39	38.47		38.48

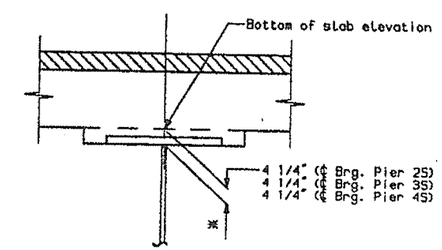

BLOCKING DETAIL

* Not to be used for setting forms.

Note:
Bottom of slab elevations are computed for continuous placement of deck concrete.

1 New sheet as of 12/28/94

PROJECT DESIGN ENGINEER	BY	DATE
DESIGN-DETAILED	JAB	6-94
CHECKED	JAB	6-94
REVISION	PDB	12-94
FIELD CHANGES	HGB	

PLANS

et.e3e4.rev

SOUTH APPROACH SPAN

STATE OF MAINE
DEPARTMENT OF TRANSPORTATION

PORTLAND - S. PORTLAND B
OVER FORE RIVER
CUMBERLAND COUNTY

BOTTOM OF SLAB ELEVA
SPANS S3-S4

SHEET 146 OF 182 AUGUSTA, MAINE

F.H.W.A. REG. NO.	STATE	PROJECT NU
1	MAINE	OPI-0059(0

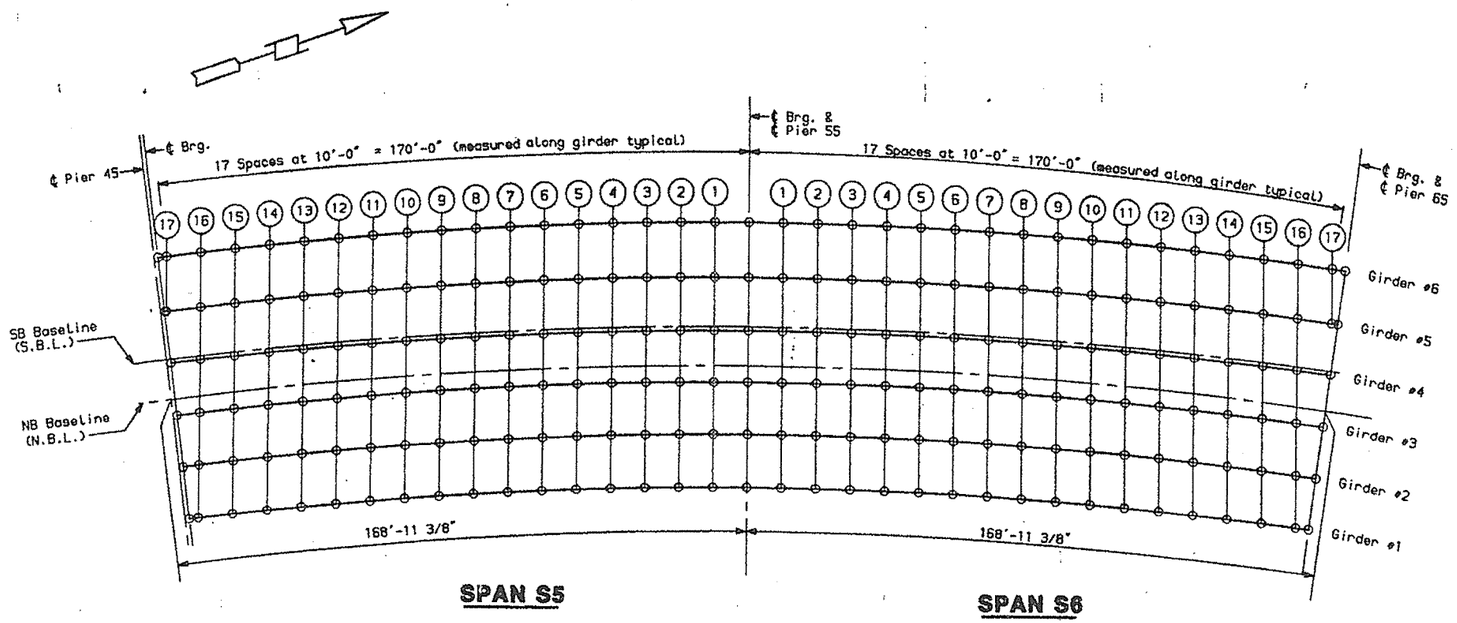

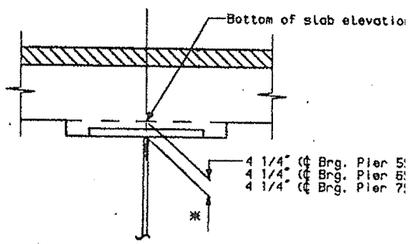

BLOCKING DETAIL

* Not to be used for setting forms.

BOTTOM OF SLAB ELEVATIONS SPAN S5																				
Slab Points		℄ Brg. Pier 4S	17	16	15	14	13	12	11	10	9	8	7	6	5	4	3	2	1	℄ Brg. Pier 5S
Girders	6	40.89	40.98	41.29	41.59	41.88	42.15	42.39	42.60	42.79	42.96	43.10	43.22	43.33	43.42	43.51	43.59	43.69	43.79	43.91
	5	40.62	40.64	40.96	41.26	41.55	41.82	42.07	42.29	42.48	42.65	42.80	42.92	43.03	43.13	43.22	43.31	43.40	43.51	43.63
	4	40.06		40.34	40.64	40.93	41.20	41.45	41.67	41.87	42.05	42.20	42.33	42.44	42.54	42.63	42.72	42.82	42.93	43.06
	3	39.62		39.84	40.14	40.43	40.71	40.96	41.19	41.39	41.57	41.73	41.86	41.98	42.08	42.18	42.27	42.37	42.49	42.62
	2	39.05		39.20	39.50	39.80	40.07	40.33	40.56	40.77	40.95	41.11	41.26	41.38	41.48	41.59	41.69	41.79	41.91	42.05
	1	38.50		38.59	38.89	39.18	39.46	39.72	39.95	40.17	40.35	40.52	40.67	40.80	40.91	41.02	41.12	41.24	41.36	41.50

BOTTOM OF SLAB ELEVATIONS SPAN S6																				
Slab Points		℄ Brg. Pier 5S	1	2	3	4	5	6	7	8	9	10	11	12	13	14	15	16	17	℄ Brg. Pier 6S
Girders	6	43.91	44.06	44.22	44.40	44.59	44.78	44.98	45.17	45.36	45.55	45.72	45.88	46.04	46.19	46.34	46.50	46.66	46.83	46.91
	5	43.63	43.79	43.95	44.13	44.33	44.53	44.73	44.92	45.12	45.30	45.47	45.64	45.80	45.95	46.10	46.25	46.41	46.59	46.63
	4	43.06	43.22	43.39	43.58	43.77	43.98	44.18	44.38	44.58	44.76	44.93	45.10	45.25	45.40	45.55	45.71	45.87		46.06
	3	42.62	42.78	42.96	43.15	43.35	43.55	43.76	43.96	44.16	44.35	44.52	44.68	44.84	44.99	45.14	45.30	45.47		45.62
	2	42.05	42.21	42.39	42.58	42.79	43.00	43.20	43.41	43.61	43.79	43.97	44.13	44.29	44.44	44.59	44.76	44.93		45.05
	1	41.50	41.67	41.85	42.05	42.25	42.46	42.67	42.88	43.08	43.26	43.44	43.60	43.76	43.92	44.07	44.24	44.42		44.50

Note:
Bottom of slab elevations are computed for continuous placement of deck concrete.

1 New sheet as of 12/28/94

PROJECT DESIGN ENGINEER		BY	DATE
DESIGN-DETAILED	JAB	JAB	6-94
CHECKED		PBB	6-94
RECTSUM		WCB	12-94
FIELD CHANGES			

PLANS

el.s5s6.rev

SOUTH APPROACH S

STATE OF MAINE
DEPARTMENT OF TRANSPORT

PORTLAND - S. PORTLAN
OVER FORE RIVE
CUMBERLAND COU

BOTTOM OF SLAB ELE
SPANS S5-S6

SHEET 147 OF 182 AUGUSTA, MAIN

F.H.W.A. REG. NO.	STATE	PROJECT NUMBER	SHEET NO.
1	MAINE	BRI-0089(002)	148

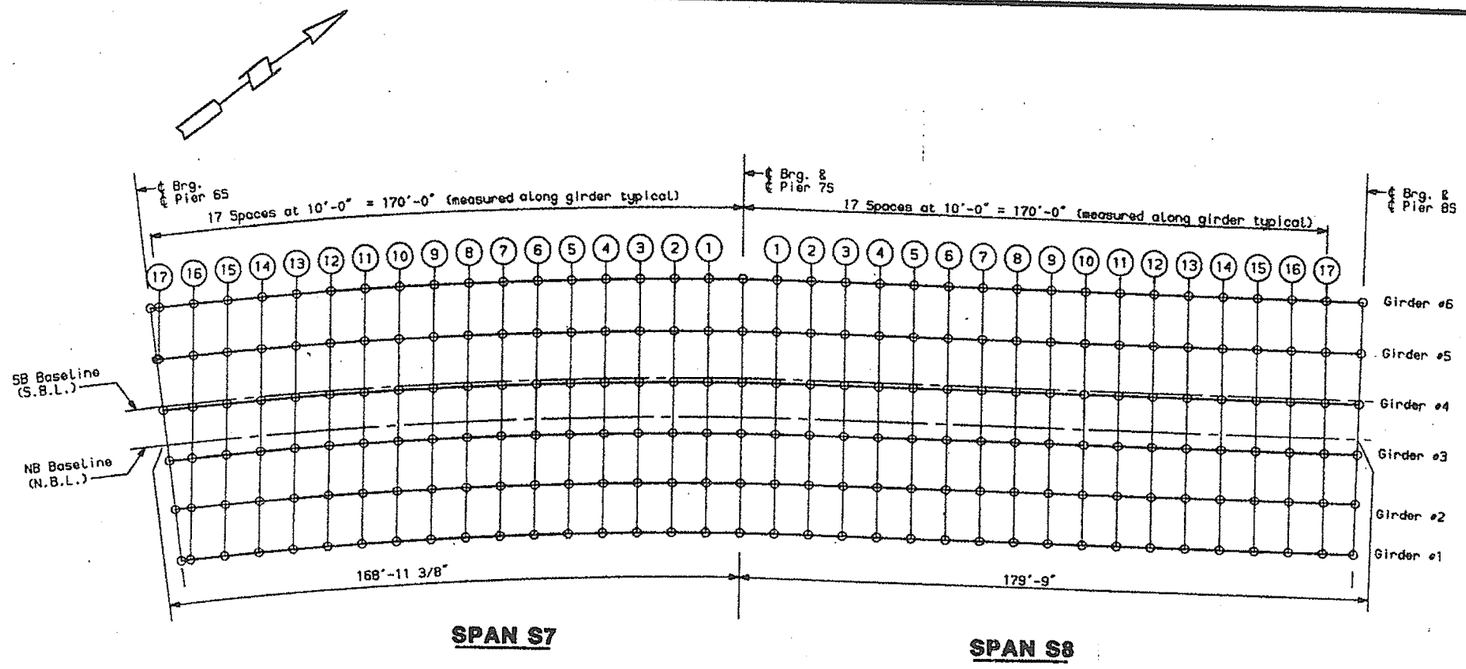

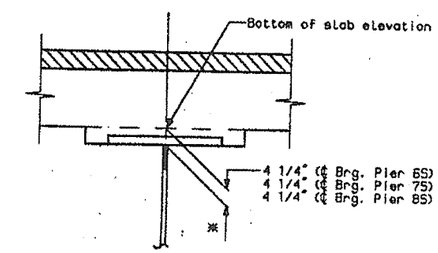

BLOCKING DETAIL

* Not to be used for setting forms.

BOTTOM OF SLAB ELEVATIONS SPAN S7

Slab Points		℄ Brg. Pier 6S	17	16	15	14	13	12	11	10	9	8	7	6	5	4	3	2	1	℄ Brg. Pier 7S
Girders	6	46.91	47.00	47.21	47.43	47.66	47.88	48.11	48.32	48.52	48.70	48.87	49.02	49.16	49.28	49.40	49.51	49.60	49.68	49.76
	5	46.63	46.68	46.89	47.11	47.34	47.57	47.80	48.01	48.21	48.40	48.57	48.72	48.87	48.99	49.11	49.23	49.33	49.43	49.53
	4	46.06		46.27	46.49	46.73	46.96	47.19	47.41	47.62	47.81	47.98	48.14	48.28	48.41	48.53	48.65	48.77	48.89	49.03
	3	45.62		45.79	46.01	46.24	46.48	46.71	46.93	47.14	47.34	47.52	47.68	47.82	47.96	48.08	48.20	48.33	48.48	48.64
	2	45.05		45.18	45.39	45.62	45.86	46.09	46.32	46.53	46.73	46.91	47.07	47.22	47.36	47.49	47.62	47.76	47.94	48.14
	1	44.50		44.59	44.80	45.03	45.26	45.50	45.72	45.94	46.14	46.33	46.50	46.65	46.79	46.93	47.06	47.22	47.42	47.65

BOTTOM OF SLAB ELEVATIONS SPAN S8

Slab Points		℄ Brg. Pier 7S	1	2	3	4	5	6	7	8	9	10	11	12	13	14	15	16	17	℄ Brg. Pier 8S
Girders	6	49.76	49.87	49.99	50.13	50.27	50.41	50.55	50.69	50.81	50.92	51.03	51.12	51.21	51.29	51.38	51.48	51.58	51.70	51.85
	5	49.53	49.66	49.81	49.96	50.13	50.29	50.45	50.61	50.75	50.88	51.00	51.11	51.21	51.32	51.42	51.54	51.66	51.80	51.97
	4	49.03	49.19	49.37	49.55	49.75	49.95	50.14	50.32	50.49	50.65	50.80	50.93	51.06	51.20	51.33	51.48	51.63	51.80	51.99
	3	48.64	48.83	49.03	49.24	49.46	49.68	49.89	50.09	50.28	50.47	50.63	50.79	50.95	51.10	51.26	51.42	51.60	51.80	52.00
	2	48.14	48.36	48.59	48.83	49.08	49.32	49.57	49.80	50.01	50.22	50.42	50.60	50.79	50.97	51.16	51.36	51.57	51.79	52.02
	1	47.65	47.90	48.16	48.43	48.70	48.97	49.24	49.48	49.71	49.92	50.13	50.32	50.51	50.71	50.90	51.11	51.33	51.57	51.79

Note:
Bottom of slab elevations are computed for continuous placement of deck concrete.

1 New sheet as of 12/28/94

PROJECT DESIGN ENGINEER	BY	DATE
DESIGN-DETAILED	JAB	6-94
CHECKED	PDE	8-94
REVISION	HCB	12-94
FIELD CHANGES		

PLANS

el.s7s8.rev

SOUTH APPROACH SPANS

STATE OF MAINE
DEPARTMENT OF TRANSPORTATION

PORTLAND - S. PORTLAND BRIDG
OVER FORE RIVER
CUMBERLAND COUNTY

BOTTOM OF SLAB ELEVATION
SPANS S7-S8

SHEET 148 OF 182 AUGUSTA, MAINE

F.H.W.A. REG. NO.	STATE	PROJECT NUMBER	SHEET NO.	TOT SHE
1	MAINE	BP1-0039(002)	149	18

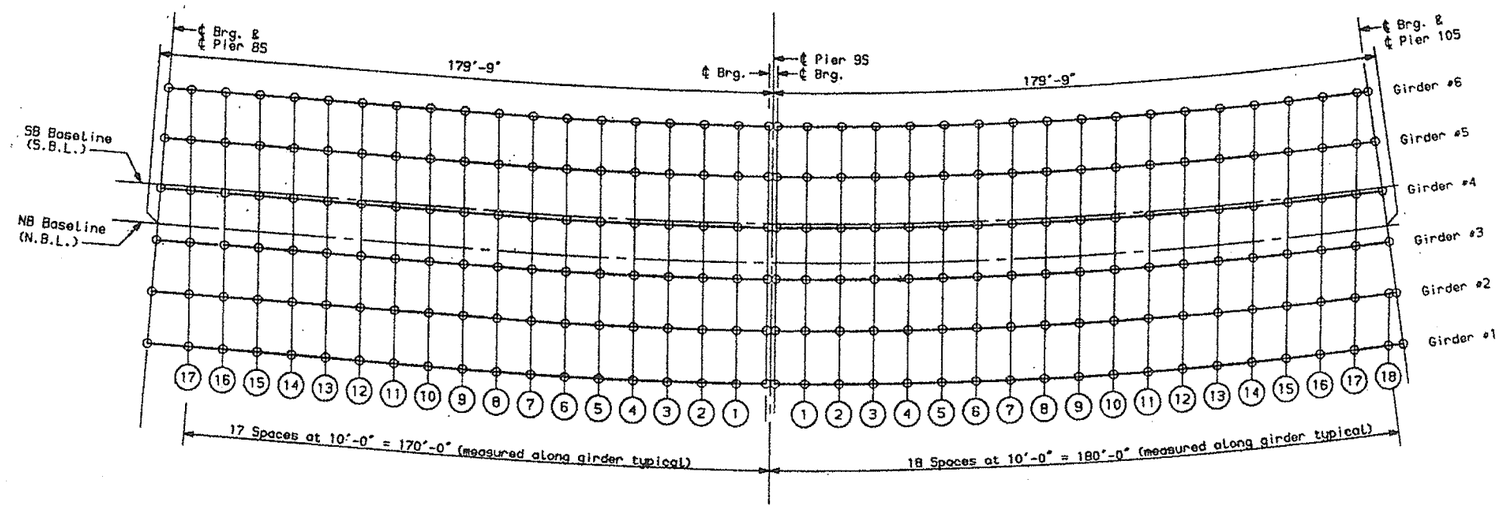

SPAN S9 **SPAN S10**

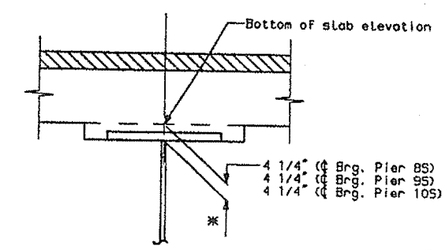

BLOCKING DETAIL

* Not to be used for setting forms.

BOTTOM OF SLAB ELEVATIONS SPAN S9

Slab Points		℄ Brg. Pier 8S	17	16	15	14	13	12	11	10	9	8	7	6	5	4	3	2	1	℄ Brg. Pier 9S
Girders	6	51.85	51.93	52.10	52.29	52.48	52.68	52.88	53.08	53.25	53.41	53.55	53.66	53.75	53.81	53.86	53.88	53.88	53.87	53.84
	5	51.97	52.08	52.27	52.48	52.70	52.93	53.15	53.36	53.56	53.74	53.89	54.03	54.15	54.24	54.30	54.35	54.37	54.38	54.38
	4	51.99	52.14	52.37	52.61	52.86	53.12	53.38	53.62	53.85	54.05	54.24	54.40	54.54	54.66	54.75	54.82	54.86	54.90	54.91
	3	52.00	52.20	52.45	52.72	53.00	53.28	53.56	53.83	54.07	54.30	54.51	54.69	54.85	54.98	55.09	55.18	55.24	55.29	55.32
	2	52.02	52.27	52.56	52.86	53.16	53.48	53.79	54.08	54.36	54.61	54.85	55.06	55.23	55.39	55.53	55.64	55.73	55.80	55.86
	1	51.79	52.09	52.38	52.69	53.01	53.33	53.65	53.95	54.24	54.50	54.74	54.95	55.14	55.30	55.44	55.55	55.64	55.72	55.78

BOTTOM OF SLAB ELEVATIONS SPAN S10

Slab Points		℄ Brg. Pier 9S	1	2	3	4	5	6	7	8	9	10	11	12	13	14	15	16	17	18	℄ Brg. Pier 10S
Girders	6	53.88	54.11	54.36	54.62	54.88	55.12	55.34	55.54	55.71	55.87	56.02	56.15	56.27	56.39	56.50	56.62	56.76	56.90		56.93
	5	54.42	54.69	54.95	55.23	55.49	55.73	55.95	56.15	56.33	56.48	56.63	56.75	56.87	56.97	57.08	57.19	57.32	57.46		57.52
	4	54.97	55.26	55.55	55.83	56.09	56.33	56.55	56.75	56.93	57.09	57.23	57.35	57.46	57.57	57.66	57.77	57.89	58.02		58.11
	3	55.38	55.70	56.00	56.28	56.55	56.79	57.02	57.22	57.40	57.55	57.69	57.81	57.92	58.02	58.11	58.21	58.32	58.44		58.56
	2	55.93	56.28	56.59	56.88	57.14	57.39	57.61	57.81	57.99	58.15	58.29	58.41	58.51	58.61	58.70	58.79	58.89	59.01	59.14	59.15
	1	55.85	56.21	56.53	56.82	57.08	57.33	57.56	57.76	57.94	58.09	58.23	58.35	58.45	58.54	58.63	58.71	58.81	58.92	59.04	59.08

Note:
Bottom of slab elevations are computed for continuous placement of deck concrete.

1 New sheet as of 12/28/94

PROJECT DESIGN ENGINEER	BY	DATE
DESIGN-DETAILED	JAB	6-94
CHECKED	JAB	6-94
REVISION	PGB	12-94
FIELD CHANGES	HCB	

PLANS

el.s9s10.rev

SOUTH APPROACH SPANS

STATE OF MAINE
DEPARTMENT OF TRANSPORTATION

PORTLAND - S. PORTLAND BRIDGE
OVER FORE RIVER
CUMBERLAND COUNTY

BOTTOM OF SLAB ELEVATIONS
SPANS S9-S10

SHEET 149 OF 182 AUGUSTA, MAINE

F.H.W.A. REG. NO.	STATE	PROJECT NUMBER	SHEET NO.
1	MAINE	BRI-0028(002)	150

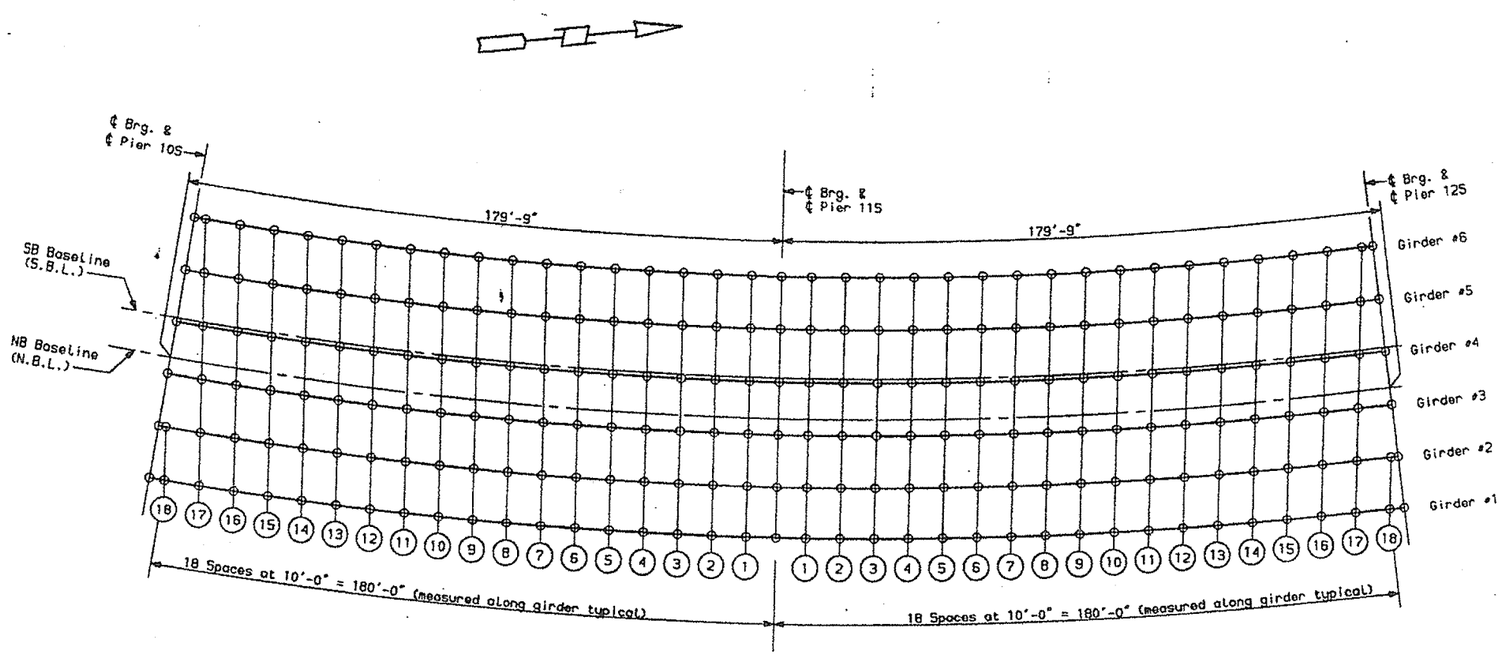

SPAN S11 **SPAN S12**

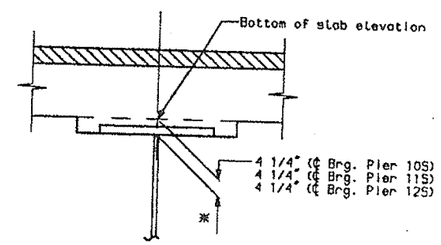

BLOCKING DETAIL

* Not to be used for setting forms.

BOTTOM OF SLAB ELEVATIONS SPAN S11

Slab Points		℄ Brg. Pier 10S	18	17	16	15	14	13	12	11	10	9	8	7	6	5	4	3	2	1	℄ Brg. Pier 11S
Girders	6	56.93		57.00	57.18	57.37	57.57	57.78	58.00	58.22	58.43	58.63	58.82	59.00	59.17	59.33	59.48	59.64	59.79	59.95	60.13
	5	57.52		57.62	57.80	57.99	58.20	58.41	58.63	58.84	59.05	59.25	59.44	59.62	59.78	59.94	60.09	60.23	60.38	60.54	60.71
	4	58.11		58.25	58.43	58.62	58.82	59.03	59.25	59.47	59.68	59.87	60.06	60.23	60.39	60.54	60.69	60.83	60.98	61.13	61.30
	3	58.56		58.73	58.91	59.10	59.31	59.52	59.74	59.95	60.15	60.35	60.53	60.70	60.86	61.01	61.15	61.29	61.43	61.59	61.75
	2	59.15	59.19	59.35	59.53	59.72	59.93	60.14	60.35	60.56	60.77	60.96	61.14	61.31	61.46	61.61	61.75	61.88	62.03	62.18	62.34
	1	59.08	59.16	59.32	59.50	59.69	59.89	60.10	60.31	60.52	60.72	60.91	61.09	61.25	61.41	61.55	61.69	61.82	61.96	62.11	62.28

BOTTOM OF SLAB ELEVATIONS SPAN S12

Slab Points		℄ Brg. Pier 11S	1	2	3	4	5	6	7	8	9	10	11	12	13	14	15	16	17	18	℄ Brg. Pier 12S
Girders	6	60.13	60.32	60.52	60.74	60.95	61.17	61.37	61.57	61.76	61.94	62.10	62.26	62.41	62.56	62.72	62.88	63.05	63.24		63.32
	5	60.71	60.91	61.11	61.32	61.54	61.75	61.96	62.16	62.34	62.52	62.68	62.83	62.98	63.12	63.28	63.43	63.60	63.79		63.91
	4	61.30	61.49	61.69	61.91	62.12	62.34	62.54	62.74	62.92	63.10	63.26	63.41	63.55	63.69	63.84	63.99	64.16	64.34		64.49
	3	61.75	61.94	62.14	62.35	62.57	62.78	62.98	63.18	63.36	63.53	63.69	63.84	63.98	64.12	64.26	64.41	64.57	64.75		64.95
	2	62.34	62.53	62.72	62.93	63.14	63.35	63.56	63.75	63.93	64.10	64.26	64.41	64.54	64.68	64.82	64.96	65.12	65.29	65.48	65.53
	1	62.28	62.46	62.65	62.86	63.07	63.28	63.48	63.67	63.85	64.02	64.17	64.32	64.45	64.59	64.72	64.87	65.02	65.19	65.37	65.47

Note:
Bottom of slab elevations are computed for continuous placement of deck concrete.

⚠1 New sheet as of 12/28/94

PROJECT DESIGN ENGINEER	BY	DATE
DESIGN-DETAILED	JAB	6-94
CHECKED	JAB	6-94
REVISION	PDB	6-94
FIELD CHANGES	MKB	12-94

PLANS

el.mlts12.rev

SOUTH APPROACH SPANS

STATE OF MAINE
DEPARTMENT OF TRANSPORTATION

PORTLAND - S. PORTLAND BRIDGE
OVER FORE RIVER
CUMBERLAND COUNTY

BOTTOM OF SLAB ELEVATIONS
SPANS S11-S12

SHEET 150 OF 182 AUGUSTA, MAINE

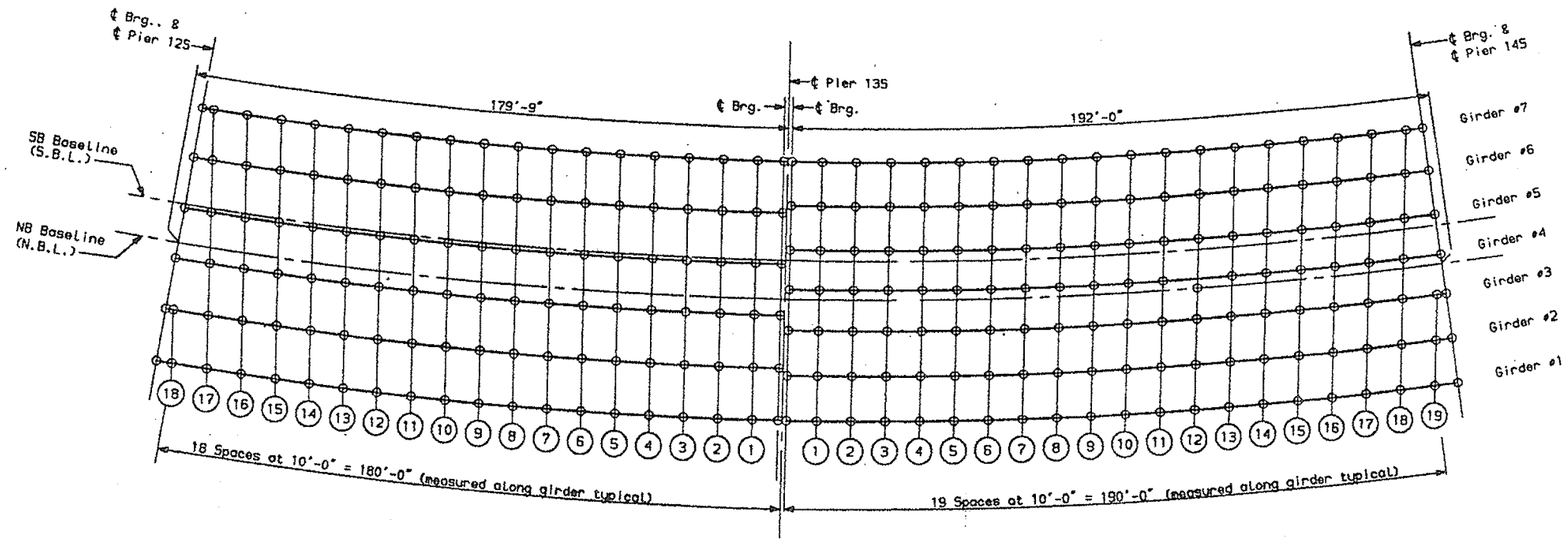

SPAN S13

SPAN S14

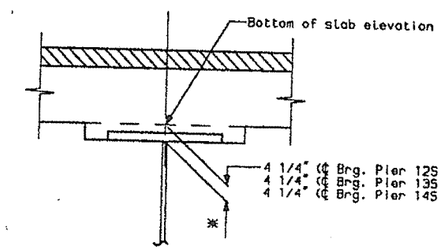

BLOCKING DETAIL

* Not to be used for setting forms.

BOTTOM OF SLAB ELEVATIONS SPAN S13

Slab Points		℄ Brg. Pier 125	18	17	16	15	14	13	12	11	10	9	8	7	6	5	4	3	2	1	℄ Brg. Pier 135
Girders	6	63.32		63.36	63.58	63.82	64.06	64.32	64.57	64.82	65.05	65.27	65.48	65.67	65.84	65.99	66.12	66.23	66.33	66.41	66.48
	5	63.91		64.00	64.22	64.46	64.71	64.97	65.22	65.47	65.71	65.93	66.13	66.31	66.48	66.62	66.74	66.85	66.93	67.01	67.07
	4	64.49		64.64	64.86	65.10	65.36	65.62	65.87	66.12	66.36	66.57	66.78	66.96	67.11	67.25	67.37	67.46	67.54	67.61	67.66
	3	64.95		65.14	65.37	65.61	65.87	66.13	66.38	66.63	66.86	67.08	67.28	67.45	67.60	67.73	67.84	67.93	68.01	68.06	68.11
	2	65.53	65.56	65.78	66.01	66.26	66.52	66.77	67.03	67.27	67.50	67.71	67.91	68.08	68.23	68.35	68.46	68.54	68.61	68.66	68.70
	1	65.47	65.54	65.76	66.00	66.25	66.51	66.77	67.02	67.26	67.49	67.70	67.89	68.05	68.20	68.32	68.41	68.49	68.55	68.60	68.63

BOTTOM OF SLAB ELEVATIONS SPAN S14

Slab Points		℄ Brg. Pier 135	1	2	3	4	5	6	7	8	9	10	11	12	13	14	15	16	17	18	19	℄ Brg. Pier 145
Girders	7	66.62	66.91	67.20	67.47	67.73	67.97	68.20	68.40	68.59	68.76	68.92	69.06	69.19	69.31	69.42	69.54	69.66	69.79	69.94		70.00
	6	67.12	67.42	67.71	67.99	68.25	68.50	68.72	68.93	69.12	69.29	69.45	69.58	69.71	69.82	69.93	70.04	70.15	70.28	70.41		70.50
	5	67.63	67.93	68.23	68.51	68.77	69.02	69.25	69.46	69.65	69.82	69.97	70.11	70.23	70.34	70.44	70.54	70.64	70.76	70.89		71.01
	4	67.95	68.26	68.56	68.84	69.11	69.36	69.59	69.80	69.99	70.16	70.31	70.44	70.56	70.67	70.77	70.86	70.96	71.07	71.20		71.33
	3	68.41	68.72	69.02	69.31	69.58	69.83	70.06	70.27	70.46	70.63	70.78	70.91	71.03	71.14	71.23	71.32	71.41	71.52	71.64	71.77	71.79
	2	68.92	69.23	69.53	69.82	70.09	70.35	70.58	70.79	70.98	71.15	71.30	71.43	71.55	71.65	71.74	71.83	71.92	72.01	72.12	72.25	72.30
	1	68.76	69.08	69.39	69.68	69.96	70.21	70.45	70.66	70.85	71.02	71.17	71.30	71.41	71.51	71.60	71.68	71.76	71.85	71.96	72.07	72.15

Note:
Bottom of slab elevations are computed for continuous placement of deck concrete.

1 New sheet as of 12/28/94

F.H.W.A. REG. NO.	STATE	PROJECT NUM
1	MAINE	BRI-0035(0

PROJECT DESIGN ENGINEER	BY	DATE
DESIGN-DETAILED JAB	JAB	6-94
CHECKED PDG	PDG	6-94
REVISION HCB	HCB	12-94
FIELD CHANGES		

PLANS

el.s13s14.rev

SOUTH APPROACH SP

STATE OF MAINE
DEPARTMENT OF TRANSPORTAT

PORTLAND - S. PORTLAND
OVER FORE RIVER
CUMBERLAND COUN

BOTTOM OF SLAB ELEV
SPANS S13-S14

SHEET 151 OF 182 AUGUSTA, MAINE

F.H.W.A. REG. NO.	STATE	PROJECT NUMBER
1	MAINE	DPI-0089(002)

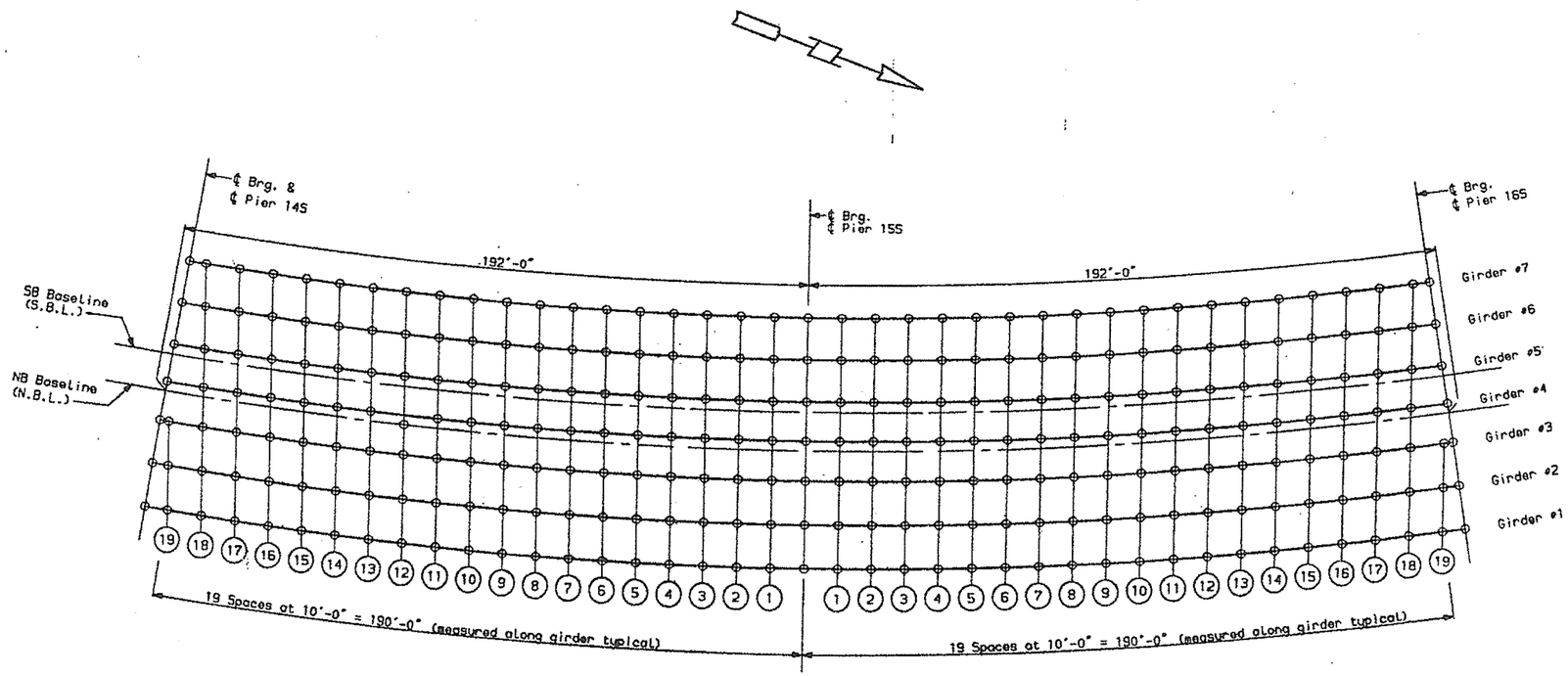

SPAN S15

SPAN S16

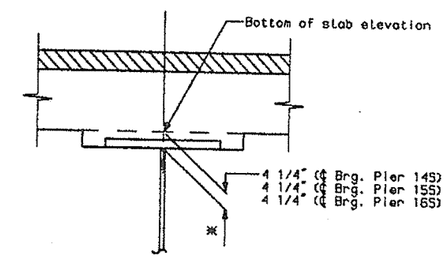

BLOCKING DETAIL

* Not to be used for setting forms.

BOTTOM OF SLAB ELEVATIONS SPAN S15

	Slab Points	℄ Brg. Pier 14S	19	18	17	16	15	14	13	12	11	10	9	8	7	6	5	4	3	2	1	℄ Brg. Pier 15S
Girders	7	70.00		70.09	70.27	70.47	70.67	70.88	71.10	71.31	71.52	71.73	71.92	72.11	72.28	72.45	72.61	72.76	72.91	73.07	73.23	73.41
	6	70.50		70.63	70.81	71.00	71.20	71.42	71.63	71.84	72.05	72.25	72.45	72.63	72.80	72.96	73.12	73.27	73.42	73.57	73.74	73.91
	5	71.01		71.17	71.34	71.54	71.74	71.95	72.16	72.38	72.58	72.78	72.97	73.15	73.32	73.48	73.63	73.78	73.93	74.08	74.24	74.42
	4	71.33		71.52	71.70	71.89	72.09	72.30	72.51	72.72	72.93	73.12	73.31	73.49	73.65	73.81	73.96	74.11	74.26	74.41	74.57	74.74
	3	71.79	71.84	72.01	72.18	72.37	72.57	72.78	72.99	73.20	73.40	73.59	73.78	73.96	74.12	74.28	74.43	74.57	74.72	74.87	75.03	75.20
	2	72.30	72.38	72.54	72.71	72.90	73.10	73.31	73.52	73.72	73.92	74.12	74.30	74.47	74.64	74.79	74.94	75.08	75.22	75.37	75.53	75.71
	1	72.15	72.26	72.42	72.59	72.78	72.97	73.18	73.39	73.59	73.79	73.98	74.16	74.34	74.50	74.65	74.79	74.93	75.08	75.22	75.38	75.56

BOTTOM OF SLAB ELEVATIONS SPAN S16

	Slab Points	℄ Brg. Pier 15S	1	2	3	4	5	6	7	8	9	10	11	12	13	14	15	16	17	18	19	℄ Brg. Pier 16S
Girders	7	73.41	73.60	73.80	74.01	74.22	74.44	74.64	74.84	75.03	75.22	75.39	75.55	75.70	75.85	76.00	76.15	76.30	76.46	76.66		76.79
	6	73.91	74.10	74.31	74.52	74.73	74.94	75.15	75.35	75.54	75.73	75.90	76.06	76.21	76.35	76.49	76.63	76.78	76.94	77.11		77.27
	5	74.42	74.61	74.81	75.02	75.24	75.45	75.66	75.86	76.05	76.23	76.40	76.56	76.71	76.85	76.99	77.12	77.27	77.41	77.57		77.75
	4	74.74	74.93	75.14	75.35	75.56	75.78	75.99	76.19	76.38	76.56	76.73	76.88	77.03	77.16	77.29	77.42	77.55	77.69	77.84		78.03
	3	75.20	75.39	75.60	75.81	76.02	76.24	76.45	76.65	76.84	77.02	77.19	77.34	77.49	77.62	77.73	77.84	77.95	78.06	78.18	78.31	78.36
	2	75.71	75.90	76.10	76.31	76.52	76.74	76.95	77.15	77.34	77.52	77.69	77.84	77.99	78.12	78.22	78.30	78.37	78.46	78.55	78.65	78.71
	1	75.56	75.75	75.95	76.16	76.37	76.59	76.80	77.00	77.20	77.38	77.54	77.69	77.84	77.96	78.07	78.14	78.21	78.28	78.36	78.46	78.53

Note:
Bottom of slab elevations are computed for continuous placement of deck concrete.

1 New sheet as of 12/28/94

PROJECT DESIGN ENGINEER	BY	DATE
DESIGN-DETAILED	JAB	6-94
CHECKED	JAB	6-94
REVISION	DGB	9-94
FIELD CHANGES	HGB	12-94

PLANS

st.s15s16.rev

SOUTH APPROACH SPAN

STATE OF MAINE
DEPARTMENT OF TRANSPORTATION

PORTLAND - S. PORTLAND B
OVER FORE RIVER
CUMBERLAND COUNTY

BOTTOM OF SLAB ELEVA
SPANS S15-S16

SHEET 152 OF 182 AUGUSTA, MAINE

F.H.W.A. REG. NO.	STATE	PROJECT NUMBER	SHEET NO.
1	MAINE	BP1-0003(002)	153

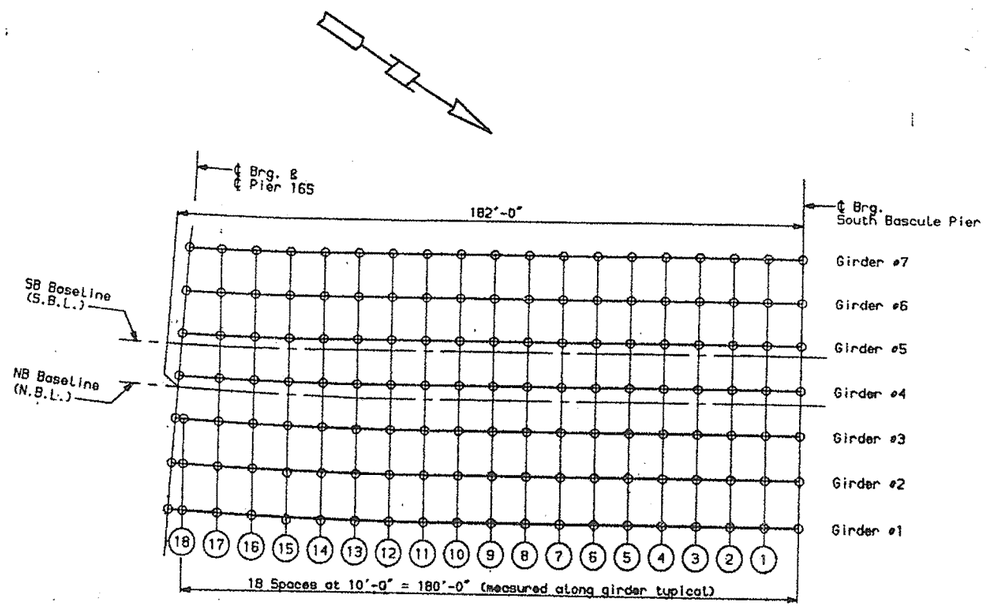

SPAN S17

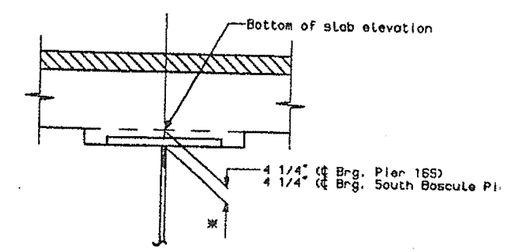

BLOCKING DETAIL

* Not to be used for setting forms.

Note:
Bottom of slab elevations are computed for continuous placement of deck concrete.

BOTTOM OF SLAB ELEVATIONS SPAN S17

	Slab Points	℄ Brg. Pier 165	18	17	16	15	14	13	12	11	10	9	8	7	6	5	4	3	2	1	℄ Brg. So. Bascule Pier
Girders	7	76.79	X	77.04	77.31	77.59	77.87	78.15	78.42	78.68	78.92	79.14	79.34	79.52	79.67	79.79	79.84	79.8[illegible]	79.85	79.82	79.79
	6	77.27	77.27	77.50	77.75	77.99	78.25	78.50	78.75	78.98	79.19	79.39	79.56	79.71	79.83	79.93	79.97	79.9[illegible]	79.98	79.95	79.92
	5	77.75	77.77	77.97	78.18	78.40	78.63	78.85	79.07	79.28	79.46	79.63	79.78	79.90	79.99	80.07	80.10	80.1[illegible]	80.11	80.08	80.05
	4	78.03	78.06	78.24	78.43	78.63	78.84	79.05	79.25	79.44	79.61	79.77	79.90	80.00	80.09	80.14	80.18	80.1[illegible]	80.18	80.16	80.12
	3	78.36	78.40	78.55	78.72	78.90	79.08	79.26	79.44	79.60	79.74	79.87	79.97	80.05	80.10	80.14	80.14	80.1[illegible]	80.09	80.04	79.99
	2	78.71	78.75	78.88	79.02	79.17	79.32	79.47	79.62	79.75	79.87	79.97	80.04	80.10	80.12	80.13	80.11	80.0[illegible]	80.00	79.93	79.86
	1	78.53	78.58	78.71	78.84	78.98	79.13	79.28	79.42	79.55	79.66	79.76	79.83	79.88	79.90	79.92	79.91	79.8[illegible]	79.85	79.79	79.73

△1 New sheet as of 12/28/94

PROJECT DESIGN ENGINEER	BY	DATE
DESIGN-DETAILED	JAB	6-94
CHECKED	JAB	6-94
REVISION	MDB	12-94
FIELD CHANGES	HCB	

PLANS

el.s17.rev

SOUTH APPROACH SPANS

STATE OF MAINE
DEPARTMENT OF TRANSPORTATION

PORTLAND - S. PORTLAND BRIDGE
OVER FORE RIVER
CUMBERLAND COUNTY

BOTTOM OF SLAB ELEVATION
SPAN S17

SHEET 153 OF 182 AUGUSTA, MAINE

REINFORCING STEEL SCHEDULE

STRAIGHT BARS

MARK	NO.	LENGTH	LOCATION	MARK	NO.	LENGTH	LOCATION	MARK	NO.	LENGTH	LOCATION
C401	2	23'-6"	Curb	S509	172	37'-0"	Slab longitudinal	S6283	154	28'-0"	Slab longitudinal
C402	26	36'-9"	Curb	S510	893	60'-0"	Slab longitudinal	S6284	101	47'-0"	Slab longitudinal
C403	4	25'-3"	Curb	S560	30	11'-3"	Slab transverse				
C404	18	37'-9"	Curb	S561	27	10'-2"	Slab transverse				
C405	2	40'-3"	Curb	S562	24	10'-10"	Slab transverse				
C406	2	34'-3"	Curb	S563	6	11'-0"	Slab transverse				
C407	30	38'-9"	Curb	S564	12	11'-6"	Slab transverse				
C408	6	39'-6"	Curb	S565	86	56'-0"	Slab longitudinal				
C416	48	60'-0"	Curb	S566	90	12'-1"	Slab transverse				
C417	2	18'-0"	Curb	S567	6	7'-9"	Slab transverse				
C504	8	30'-8"	Parapet	S568	6	8'-0"	Slab transverse				
C508	4	38'-0"	Parapet	S569	6	10'-0"	Slab transverse				
C511	2	4'-4"	Median	S570	12	9'-3"	Slab transverse				
C512	12	3'-0"	Median	S571	9	9'-9"	Slab transverse				
C513	13	35'-0"	Parapet, Median	S572	12	10'-6"	Slab transverse				
C514	12	23'-3"	Median	S573	172	43'-0"	Slab longitudinal				
C515	9	39'-2"	Parapet, Median	S580	55	59'-0"	Slab longitudinal				
C517	12	7'-0"	Median	S581	72	55'-0"	Slab longitudinal				
C521	8	36'-9"	Parapet	S585	21	3'-0"	Slab transverse				
C522	3	2'-7"	Median	S586	15	3'-3"	Slab transverse				
C525	8	27'-3"	Median	S587	3	3'-6"	Slab transverse				
C527	9	23'-6"	Median	S588	27	3'-9"	Slab transverse				
C530	16	31'-0"	Parapet	S589	18	4'-0"	Slab transverse				
C531	8	44'-0"	Parapet	S590	15	4'-3"	Slab transverse				
C532	4	50'-0"	Parapet	S591	60	4'-7"	Slab transverse				
C533	1203	60'-0"	Median	S592	3	5'-8"	Slab transverse				
C534	12	36'-0"	Parapet	S601	8067	60'-0"	Slab longitudinal				
C535	9	52'-0"	Median	S604	2129	40'-4"	Slab longitudinal				
C536	38	57'-0"	Parapet, Median	S608	15	4'-6"	Slab transverse				
C537	50	55'-2"	Parapet, Median	S638	827	36'-4"	Slab transverse				
C538	4	26'-0"	Parapet, Median	S639	1457	35'-7"	Slab longitudinal				
C539	21	54'-0"	Parapet	S643	266	37'-3"	Slab longitudinal				
C541	20	51'-0"	Parapet, Median	S649	608	54'-2"	Slab longitudinal				
C542	8	53'-0"	Parapet	S660	255	41'-6"	Slab longitudinal				
C543	18	42'-0"	Median	S678	1428	42'-6"	Slab longitudinal				
C544	4	48'-0"	Parapet	S682	216	42'-0"	Slab longitudinal				
S402	30	12'-9"	Slab transverse	S690	340	38'-6"	Slab longitudinal				
S403	40	13'-5"	Slab transverse	S691	1277	44'-6"	Slab longitudinal				
S407	4	8'-9"	Slab transverse	S695	98	51'-6"	Slab longitudinal				
S408	4	11'-1"	Slab transverse	S697	101	58'-4"	Slab longitudinal				
S409	8	11'-6"	Slab transverse	S6105	202	33'-3"	Slab longitudinal				
S410	8	12'-1"	Slab transverse	S6148	80	55'-0"	Slab longitudinal				
S411	4	9'-11"	Slab transverse	S6183	61	59'-0"	Slab longitudinal				
S412	4	10'-1"	Slab transverse	S6184	162	32'-0"	Slab longitudinal				
S413	8	10'-9"	Slab transverse	S6185	222	30'-0"	Slab longitudinal				
S414	8	11'-3"	Slab transverse	S6225	96	37'-7"	Slab tansverse				
S505	30	12'-9"	Slab transverse	S6261	211	12'-0"	Slab tansverse				
S506	60	13'-4"	Slab transverse	S6272	771	32'-6"	Slab tansverse				
S507	15	12'-5"	Slab transverse	S6282	196	24'-0"	Slab longitudinal				

PF	DESIGN	DATE
PLANS	DESIGN-DETAILED DTP DTP	6-94
	CHECKED MCB	6-94
	REVISION	
	FIELD CHANGES	

F.H.W.A. REG. NO.	STATE	PROJECT
1	MAINE	BPI-00

NOTES:

All dimensions are out to out c

Bending details and hooks shall the recommendations of the curr of ACI Standard 318.

First digit following the lette mark indicates size of reinf. b

Mark (C502) bar size -
Mark (S603) bar size -

Each truss bar, types 12, 13, 1 29, 30 and 31, may be replaced two (2) straight bars (one top bottom) of the same bar size as bar. Payment in either case sha on truss bars as scheduled on p

All dimensions in parentheses i dimensions in a negative direct

SOUTH APPROACH

STATE OF MAIN
DEPARTMENT OF TRANSP

PORTLAND - S. PORTL
OVER FORE RI
CUMBERLAND C

SUPERSTRUC
BAR SCHEDU

SHEET 154 OF 182 AUGUSTA, M

REINFORCING STEEL SCHEDULE

BENT BARS

MARK	NO.	LENGTH	TYPE	A	B	C	D	E	F.	G	H	O	R	LOCATION	REMARKS
C415	1530	3'-2"	5	1'-7"	1'-7"	0'-0"					0'-0"			Median	
C501	6231	5'-10"	1											Parapet	
C503	2101	7'-0"	5	2'-7"	1'-10"	2'-7"					0'-3 3/8"			Median	
C505	2	9'-0"	4	2'-8"	1'-8"	1'-6"								Parapet	
C506	4	12'-0"	4	5'-8"	1'-8"	1'-6"								Parapet	
C507	4	2'-11"	5	1'-0"	0'-11"	1'-0"					0'-0"			Median	
C509	8	9'-8"	5	3'-0"	3'-8"	3'-0"					0'-0"			Median	
C510	8	5'-0"	5	1'-6"	2'-0"	1'-6"					0'-0"			Parapet	
C518	16	12'-9"	5	2'-6"	7'-9"	2'-6"					0'-0"			Median	
C519	52	7'-6"	5	2'-7"	2'-4"	2'-7"					0'-0"			Median	
C520	1530	5'-5 5/8"	20											Parapet	
C528	4	3'-10"	7	1'-4"	0'-3"	1'-0"					0'-8 1/2"			Median	
C540	94	7'-6" TO 8'-0"	5	2'-7"	VARIES	2'-7"					0'-0"			Median	6 sets of 14 and 1 set of 10, B varies between each set 2'-4" to 2'-10" by 1"
C546	83	7'-0" TO 7'-6"	5	2'-7"	VARIES	2'-7"					0'-3 3/8"			Median	6 sets of 23 and 1 set of 27, B varies between each set 1'-10" to 2'-4" by 1"
S401	3115	4'-3"	6	1'-1"	0'-9"	1'-1"	0'-8"							Curb	
S405	568	4'-1"	9	1'-1"	1'-6"	1'-1"								Slab longitudinal	
S501	7758	7'-0"	2											Slab transverse	
S503	2101	9'-4"	7	3'-2"	1'-3"	1'-10"					1'-1"			Median	
S504	485	6'-11"	8	2'-6"	1'-0"	1'-5"	1'-3"	0'-9"			0'-10"			Slab longitudinal	
S508	1004	4'-8"	9	1'-10"	1'-5"	1'-0"								Slab longitudinal	
S511	4	9'-0"	4	2'-8"	1'-8"	1'-6"								Parapet	
S512	164	8'-2"	8	2'-6"	1'-0"	2'-8"	1'-3"	0'-9"			0'-10"			Slab longitudinal	
S513	36	8'-0"	5	2'-6"	3'-0"	2'-6"					0'-0"			Median	
S514	36	11'-0"	5	4'-0"	3'-0"	4'-0"					0'-0"			Median	
S515	7	7'-10"	6	2'-1"	3'-4"	2'-1"	0'-2"							Parapet	
S516	8	5'-6"	6	2'-1"	1'-0"	2'-1"	0'-2"							Curb	
S517	4	8'-4"	6	2'-7"	1'-2"	2'-7"	1'-0"							Median	
S518	4	3'-6"	6	1'-1"	1'-0"	1'-1"	0'-2"							Slab transverse	
S519	2	12'-0"	4	5'-8"	1'-8"	1'-6"								Slab transverse	
S520	2	5'-10"	6	1'-1"	3'-4"	1'-1"	0'-2"							Slab transverse	
S521	16	6'-0"	5	3'-0"	3'-0"	0'-0"					0'-0"			Median	
S522	2	9'-10"	6	2'-7"	1'-8"	2'-7"	1'-6"							Slab transverse	
S559	52	9'-10"	7	3'-8"	1'-3"	1'-10"					1'-1"			Slab transverse	
S579	94	9'-10" TO 9'-4"	7	VARIES	1'-3"	1'-10"					1'-1"			Slab transverse	6 sets of 14 and 1 set of 10, B varies between each set 3'-8" to 3'-2" by 1"
S584	83	9'-4" TO 9'-10"	7	VARIES	1'-3"	1'-10"					1'-1"			Slab transverse	6 sets of 23 and 1 set of 27, A varies between each set 3'-2" to 3'-8" by 1"
S606	15	5'-1"	16	0'-7"	4'-6"						0'-5"			Parapet	
S609	525	41'-7"	10	3'-4"	28'-0"	9'-7"	0'-8"		0'-1 1/2"	—	0'-6"		1'-0 5/8"	Slab transverse	
S610	525	47'-9"	11	9'-3"	35'-2"	3'-4"			0'-1 3/4"	—			0'-1 1/2"	Slab transverse	
S611	42	41'-7"	10	3'-4"	28'-0"	9'-7"	0'-8"		0'-1 1/4"	—	0'-6"		0'-11 7/8"	Slab transverse	
S612	42	47'-9"	11	9'-3"	35'-2"	3'-4"			0'-1"	—			0'-1 1/4"	Slab transverse	
S613	34	41'-7"	10	3'-4"	28'-0"	9'-7"	0'-8"		0'-1"	—	0'-6"		0'-11"	Slab transverse	
S614	34	47'-9"	11	9'-3"	35'-2"	3'-4"			0'-0 1/4"	—			0'-1"	Slab transverse	
S616	742	41'-7"	10	3'-4"	28'-0"	9'-7"	0'-8"		—	0'-1 1/2"	0'-6"			Slab transverse	
S617	262	45'-9"	12	0'-8"	8'-4"	7'-7"	7'-6"	5'-4"	0'-2 1/2"	0'-7"	0'-6"	0'-10"	0'-6 5/8"	Slab transverse	
S618	262	46'-0"	13	9'-3"	9'-3"	7'-7"	7'-6"	5'-4"		0'-7"		0'-10"	0'-1 3/4"	Slab transverse	
S619	21	45'-9"	12	0'-8"	8'-4"	7'-7"	7'-6"	5'-4"	0'-2 1/2"	0'-7"	0'-6"	0'-10"	0'-5 7/8"	Slab transverse	

F.H.W.A. REG. NO.	STATE	PROJE
1	MAINE	DPI-1

DESIGN-DETAILED	DTP	6-94
CHECKED	HCB	6-94
REVISION	DTP	
FIELD CHANGES		

PLANS

NOTES:

All dimensions are out to out o

Bending details and hooks shall the recommendations of the curr of ACI Standard 318.

First digit following the letto mark indicates size of reinf. b

Mark (C502) bar size -
Mark (S603) bar size -

Each truss bar, types 12, 13, 1 29, 30 and 31, may be replaced two (2) straight bars (one top bottom) of the same bar size as bar. Payment in either case sho on truss bars as scheduled on p

All dimensions in parentheses i dimensions in a negative direct

SOUTH APPROACH

STATE OF MAIN
DEPARTMENT OF TRANSP

PORTLAND - S. PORTL
OVER FORE RI
CUMBERLAND CO

SUPERSTRUC
BAR SCHEDUL

SHEET 155 OF 182 AUGUSTA, M

REINFORCING STEEL SCHEDULE

F.H.W.A. REG. NO.	STATE	PROJ.
1	MAINE	DPI

BENT BARS

MARK	NO.	LENGTH	TYPE	A	B	C	D	E	F	G	H	O	R	LOCATION	REMARKS
S620	17	45'-9"	12	0'-8"	8'-4"	7'-7"	7'-6"	5'-4"	0'-1 1/2"	0'-7"	0'-6"	0'-10"	0'-5"	Slab transverse	
S621	22	60'-0"	14	0'-8"	8'-4"	7'-7"	7'-6"	4'-0"	0'-0 3/4"	0'-7"	0'-6"	0'-10"	0'-4 1/4"	Slab transverse	
S622	21	46'-0"	13	9'-3"	9'-3"	7'-7"	7'-6"	5'-4"		0'-7"		0'-10"	0'-1"	Slab transverse	
S623	742	47'-9"	11	16'-5"	28'-0"	3'-4"			1'-0"	—			0'-1 1/2"	Slab transverse	
S624	262	60'-0"	14	0'-8"	8'-4"	7'-7"	7'-6"	4'-0"	0'-1 1/2"	0'-7"	0'-6"	0'-10"	0'-6 5/8"	Slab transverse	
S625	262	31'-9"	15	9'-3"	9'-3"	7'-7"	7'-6"	6'-8"	0'-0"	0'-7"		0'-10"	0'-1 3/4"	Slab transverse	
S626	21	60'-0"	14	0'-8"	8'-4"	7'-7"	7'-6"	4'-0"	0'-1 1/4"	0'-7"	0'-6"	0'-10"	0'-5 7/8"	Slab transverse	
S627	17	46'-0"	13	9'-3"	9'-3"	7'-7"	7'-6"	5'-4"		0'-7"		0'-10"	0'-0 1/4"	Slab transverse	
S628	17	60'-0"	14	0'-8"	8'-4"	7'-7"	7'-6"	4'-0"	0'-1"	0'-7"	0'-6"	0'-10"	0'-5"	Slab transverse	
S629	21	31'-9"	15	9'-3"	9'-3"	7'-7"	7'-6"	6'-8"	0'-0"	0'-7"		0'-10"	0'-1"	Slab transverse	
S630	741	60'-0"	14	0'-8"	8'-4"	7'-7"	7'-6"	4'-0"	(0'-1 1/2")	0'-7"		0'-10"	0'-0"	Slab transverse	
S631	525	37'-7"	11	0'-0"	28'-0"	9'-7"			—	—			0'-6 5/8"	Slab transverse	
S633	22	31'-9"	15	0'-0"	9'-3"	7'-7"	7'-6"	6'-8"	0'-0 3/4"	0'-7"		0'-10"	0'-0"	Slab transverse	
S634	525	51'-0"	32	9'-3"	35'-2"	3'-6"	3'-1"		0'-1 1/2"	—			0'-1 3/4"	Slab transverse	
S640	741	31'-9"	15	0'-0"	9'-3"	7'-7"	7'-6"	6'-8"	0'-10"	0'-7"		0'-10"	0'-0"	Slab transverse	
S647	742	52'-3"	32	16'-5"	28'-0"	3'-6"	4'-4"		0'-1 1/2"				1'-0"	Slab transverse	
S650	17	31'-9"	15	9'-3"	9'-3"	7'-7"	7'-6"	6'-8"	0'-0"	0'-7"		0'-10"	0'-0 1/4"	Slab transverse	
S651	34	37'-7"	11	0'-0"	28'-0"	9'-7"			—	—			0'-5"	Slab transverse	
S6141	42	51'-0"	32	9'-3"	35'-2"	3'-6"	3'-1"		0'-1 1/4"				0'-1"	Slab transverse	
S6143	42	37'-7"	11	0'-0"	28'-0"	9'-7"			—	—			0'-5 7/8"	Slab transverse	
S6144	22	41'-7"	10	3'-4"	28'-0"	9'-7"	0'-8"		0'-0 3/4"		0'-6"		0'-10 1/4"	Slab transverse	
S6145	22	47'-9"	11	16'-5"	28'-0"	3'-4"			—	0'-0 7/8"			0'-0 3/4"	Slab transverse	
S6146	22	37'-7"	11	0'-0"	28'-0"	9'-7"			—	—			0'-4 1/4"	Slab transverse	
S6147	22	51'-0"	32	16'-5"	28'-0"	3'-6"	3'-1"		0'-0 3/4"	0'-0 7/8"			—	Slab transverse	
S6149	34	51'-0"	32	9'-3"	35'-2"	3'-6"	3'-1"		0'-1"	0'-0"			0'-0"	Slab transverse	
S6150	183	46'-4"	10	0'-0"	36'-1"	9'-7"	0'-8"		—	—	0'-6"		1'-0 3/4"	Slab transverse	
S6151	21	45'-2"	10	0'-0"	34'-11"	9'-7"	0'-8"		—	—	0'-6"		1'-0 3/4"	Slab transverse	
S6152	21	44'-6"	10	0'-0"	34'-3"	9'-7"	0'-8"		—	—	0'-6"		1'-0 3/4"	Slab transverse	
S6153	21	43'-9"	10	0'-0"	33'-6"	9'-7"	0'-8"		—	—	0'-6"		1'-0 3/4"	Slab transverse	
S6154	21	42'-11"	10	0'-0"	32'-8"	9'-7"	0'-8"		—	—	0'-6"		1'-0 3/4"	Slab transverse	
S6155	41	42'-1"	10	0'-0"	31'-10"	9'-7"	0'-8"		—	—	0'-6"		1'-0 3/4"	Slab transverse	
S6156	47	40'-9"	10	0'-0"	30'-6"	9'-7"	0'-8"		—	—	0'-6"		1'-0 3/4"	Slab transverse	
S6157	98	39'-7"	10	0'-0"	29'-4"	9'-7"	0'-8"		—	—	0'-6"		1'-0 3/4"	Slab transverse	
S6158	956	38'-4"	10	0'-0"	28'-1"	9'-7"	0'-8"		—	—	0'-6"		1'-0 3/4"	Slab transverse	
S6159	1409	33'-8"	33	24'-1"	9'-7"	0'-0"					0.059		0	Slab transverse	
S6160	122	15'-3"	33	4'-0"	7'-9"	3'-6"					0.038		0.038	Slab transverse	
S6161	20	15'-6"	33	4'-3"	7'-9"	3'-6"					0.038		0.038	Slab transverse	
S6162	41	15'-7" TO 16'-4"	33	VARIES	7'-9"	3'-6"					0.038		0.038	Slab transverse	9 sets of 4 and 1 set of 5, A varies between each set 4'-4" to 5'-1" by 1"
S6163	104	16'-6" TO 20'-0"	33	VARIES	7'-9"	3'-6"					0.038		0.038	Slab transverse	21 sets of 4 and 4 sets of 5, A varies between each set 5'-3" to 8'-9" by 1 3/4"
S6164	62	20'-1" TO 21'-6 1/2"	33	VARIES	7'-9"	3'-6"					0.038		0.038	Slab transverse	13 sets of 4 and 2 sets of 5, A varies between each set 8'-10" to 10'-3 1/2" by 1 1/4"
S6165	83	21'-7" TO 22'-4"	33	VARIES	7'-9"	3'-6"					0.038		0.038	Slab transverse	7 sets of 8 and 3 sets of 9, A varies between each set 10'-4" to 11'-1" by 1"
S6166	104	22'-4" TO 21'-7"	33	VARIES	7'-9"	3'-6"					0.038		0.038	Slab transverse	6 sets of 10 and 4 sets of 11, A varies between each set 11'-1" to 10'-4" by 1"
S6167	165	21'-7" TO 20'-0"	33	VARIES	7'-9"	3'-6"					0.038		0.038	Slab transverse	15 sets of 8 and 5 sets of 9, A varies between each set 10'-4" to 8'-9" by 1"
S6168	185	20'-0" TO 17'-10 1/2"	33	VARIES	7'-9"	3'-6"					0.038		0.038	Slab transverse	13 sets of 10 and 5 sets of 11, A varies between each set 8'-9" to 6'-7 1/2" by 1 1/2"
S6169	328	17'-9" TO 15'-3 3/4"	33	VARIES	7'-9"	3'-6"					0.038		0.038	Slab transverse	32 sets of 8 and 8 sets of 9, A varies between each set 6'-6" to 4'-0 3/4" by 3/4"
S6170	195	15'-3" TO 14'-9"	33	VARIES	7'-9"	3'-6"					0.038		0.038	Slab transverse	3 sets of 65, A varies between each set 4'-0" to 3'-6" by 3"
S6171	122	32'-2"	33	4'-0"	12'-8"	15'-6"					0.038		0.038	Slab transverse	
S6172	20	32'-5"	33	4'-3"	12'-8"	15'-6"					0.038		0.038	Slab transverse	
S6173	41	31'-9" TO 32'-6"	33	VARIES	12'-8"	14'-9"					0.038		0.038	Slab transverse	9 sets of 4 and 1 set of 5, A varies between each set 4'-4" to 5'-1" by 1"

DATE	BY	DESCRIPTION
6-94	DTP	CHECKED
6-94	HCB	REVISION
		FIELD CHANGES

PLANS

NOTES:

All dimensions are out to out

Bending details and hooks shal
the recommendations of the cur
of ACI Standard 318.

First digit following the lett
mark indicates size of reinf.

Mark (C502) bar size -
Mark (S603) bar size -

Each truss bar, types 12, 13,
29, 30 and 31, may be replaced
two (2) straight bars (one top
bottom) of the same bar size a
bar. Payment in either case sh
on truss bars as scheduled on

All dimensions in parentheses
dimensions in a negative direc

SOUTH APPROACH

STATE OF MAIN
DEPARTMENT OF TRANSP

PORTLAND - S. PORTL
OVER FORE RI
CUMBERLAND C

SUPERSTRUC
BAR SCHEDUL

SHEET 156 OF 182 AUGUSTA, M

REINFORCING STEEL SCHEDULE

REG. NO.	STATE	PROJECT
1	MAINE	DPI-006

BENT BARS

MARK	NO.	LENGTH	TYPE	A	B	C	D	E	F	G	H	O	R	LOCATION	REMARKS
S6174	104	32'-2" TO 33'-8"	33	VARIES	12'-8"	VARIES					0.038		0.038	Slab transverse	21 sets of 4 and 4 sets of 5, A varies between each set 5'-3" to 8'-9" by 1 3/4"
															21 sets of 4 and 4 sets of 5, C varies between each set 14'-3" to 12'-3" by 1"
S6175	62	33'-10" TO 36'-9"	33	VARIES	12'-8"	VARIES					0.038		0.038	Slab transverse	13 sets of 4 and 2 sets of 5, A varies between each set 8'-10" to 10'-3 1/2" by 1 1/4"
															13 sets of 4 and 2 sets of 5, C varies between each set 12'-4" to 13'-9 1/2" by 1 1/4"
S6176	83	36'-10" TO 38'-4"	33	VARIES	12'-8"	VARIES					0.038		0.038	Slab transverse	7 sets of 8 and 3 sets of 9, A varies between each set 10'-4" to 11'-1" by 1"
															7 sets of 8 and 3 sets of 9, A varies between each set 13'-10" to 14'-7" by 1"
S6177	104	38'-4" TO 37'-0 1/4"	33	VARIES	12'-8"	VARIES					0.038		0.038	Slab transverse	6 sets of 10 and 4 sets of 11, A varies between each set 11'-1" to 10'-4" by 1"
															6 sets of 10 and 4 sets of 11, C varies between each set 14'-7" to 14'-0 1/4" by 3/4"
S6178	165	37'-0" TO 33'-10"	33	VARIES	12'-8"	VARIES					0.038		0.038	Slab transverse	15 sets of 8 and 5 sets of 9, A varies between each set 10'-4" to 8'-9" by 1"
															15 sets of 8 and 5 sets of 9, C varies between each set 14'-0" to 12'-5" by 1"
S6179	185	33'-9" TO 29'-6"	33	VARIES	12'-8"	VARIES					0.038		0.038	Slab transverse	13 sets of 10 and 5 sets of 11, A varies between each set 8'-9" to 6'-7 1/2" by 1 1/2"
															13 sets of 10 and 5 sets of 11, C varies between each set 12-4" to 10'-2 1/2" by 1 1/2"
S6180	328	29'-2" TO 24'-3 1/2"	33	VARIES	12'-8"	VARIES					0.038		0.038	Slab transverse	32 sets 8 and 8 sets of 9, A varies between each set 6'-6" to 4'-0 3/4" by 3/4"
															32 sets of 8 and 8 sets of 9, C varies between each set 10'-0" to 7'-6 3/4" by 3/4"
S6181	195	24'-2" TO 23'-2"	33	VARIES	12'-8"	VARIES					0.038		0.038	Slab transverse	3 sets of 65, A varies between each set 4'-0" to 3'-6" by 3"
															3 sets of 65, C varies between each set 7'-6" to 7'-0" by 3"
S6191	50	41'-7"	10	3'-4"	28'-0"	9'-7"	0'-8"		0'-0"	0'-0"	0'-6"		0'-9 1/2"	Slab transverse	
S6192	26	47'-9"	11	16'-5"	28'-0"	3'-4"			—	0'-1 7/8"			0'-0"	Slab transverse	
S6193	50	37'-7"	11	0'-0"	28'-0"	9'-7"			—	—			0'-3 1/2"	Slab transverse	
S6194	26	51'-0"	32	16'-5"	28'-0"	3'-6"	3'-1"		0'-0"	0'-1 7/8"			—	Slab transverse	
S6195	50	60'-0"	14	0'-8"	8'-4"	7'-7"	7'-6"	4'-0"	0'-0"	0'-7"	0'-6"	0'-10"	0'-3 1/2"	Slab transverse	
S6196	26	31'-9"	15	0'-0"	9'-3"	7'-7"	7'-6"	6'-8"	0'-1 1/2"	0'-7"		0'-10"	—	Slab transverse	
S6197	24	47'-9"	11	16'-5"	28'-0"	3'-4"			—	0'-2 3/4"			0'-0"	Slab transverse	
S6198	24	51'-0"	32	16'-5"	28'-0"	3'-6"	3'-1"		0'-0"	0'-2 3/4"			—	Slab transverse	
S6199	24	31'-9"	15	0'-0"	9'-3"	7'-7"	7'-6"	6'-8"	0'-2 1/2"	0'-7"		0'-10"	—	Slab transverse	
S6200	44	41'-7"	10	3'-4"	28'-0"	9'-7"	0'-8"		0'-0"	0'-0"	0'-6"		0'-8 1/2"	Slab transverse	
S6201	44	37'-7"	11	0'-0"	28'-0"	9'-7"			—	—			0'-2 1/2"	Slab transverse	
S6202	44	60'-0"	14	0'-8"	8'-4"	7'-7"	7'-6"	4'-0"	0'-0"	0'-7"	0'-6"	0'-10"	0'-2 1/2"	Slab transverse	
S6203	22	47'-9"	11	16'-5"	28'-0"	3'-4"			—	0'-3 5/8"			0'-0"	Slab transverse	
S6204	22	51'-0"	32	16'-5"	28'-0"	3'-6"	3'-1"		0'-0"	0'-3 5/8"			—	Slab transverse	
S6205	22	31'-9"	15	0'-0"	9'-3"	7'-7"	7'-6"	6'-8"	0'-3 1/4"	0'-7"		0'-10"	—	Slab transverse	
S6206	22	47'-9"	11	16'-5"	28'-0"	3'-4"			—	0'-4 1/2"			0'-0"	Slab transverse	
S6207	22	51'-0"	32	16'-5"	28'-0"	3'-6"	3'-1"		0'-0"	0'-4 1/2"			—	Slab transverse	
S6208	22	31'-9"	15	0'-0"	9'-3"	7'-7"	7'-6"	6'-8"	0'-4"	0'-7"		0'-10"	—	Slab transverse	
S6209	46	41'-7"	10	3'-4"	28'-0"	9'-7"	0'-8"		—	—	0'-6"		0'-7 1/2"	Slab transverse	
S6210	46	37'-7"	11	0'-0"	28'-0"	9'-7"			0'-0"	0'-0"			0'-1 1/2"	Slab transverse	
S6211	46	60'-0"	14	0'-8"	8'-4"	7'-7"	7'-6"	4'-0"	0'-0"	0'-7"	0'-6"	0'-10"	0'-1 1/2"	Slab transverse	
S6212	24	47'-9"	11	16'-5"	28'-0"	3'-4"			—	0'-5 3/8"			0'-0"	Slab transverse	
S6213	24	51'-0"	32	16'-5"	28'-0"	3'-6"	3'-1"		0'-0"	0'-5 3/8"			—	Slab transverse	
S6214	24	31'-9"	15	0'-0"	9'-3"	7'-7"	7'-6"	6'-8"	0'-4 3/4"	0'-7"		0'-10"	—	Slab transverse	
S6215	22	47'-9"	11	16'-5"	28'-0"	3'-4"			0'-6 5/8"	—			0'-0 1/2"	Slab transverse	
S6216	22	51'-0"	32	16'-5"	28'-0"	3'-6"	3'-1"		0'-0 1/2"	—			0'-6 5/8"	Slab transverse	
S6217	22	31'-9"	15	0'-0"	9'-3"	7'-7"	7'-6"	6'-8"	0'-5 1/2"	0'-7"		0'-10"	—	Slab transverse	
S6218	26	41'-7"	10	3'-4"	28'-0"	9'-7"	0'-8"		—	0'-0 1/2"	0'-6"		0'-6 3/4"	Slab transverse	
S6219	26	37'-7"	11	0'-0"	28'-0"	9'-7"			—	—			0'-0 3/4"	Slab transverse	
S6220	26	60'-0"	14	0'-8"	8'-4"	7'-7"	7'-6"	4'-0"	(0'-0 1/2")	0'-7"	0'-6"	0'-10"	0'-0 3/4"	Slab transverse	
S6221	26	47'-9"	11	16'-5"	28'-0"	3'-4"			0'-7 1/8"	—			0'-0 1/2"	Slab transverse	
S6222	26	51'-0"	32	16'-5"	28'-0"	3'-6"	3'-1"		0'-0 1/2"	—			0'-7 1/8"	Slab transverse	
S6223	26	31'-9"	15	0'-0"	9'-3"	7'-7"	7'-6"	6'-8"	0'-6 1/2"	0'-7"		0'-10"	—	Slab transverse	

NOTES:

All dimensions are out to out of

Bending details and hooks shall
the recommendations of the curre
of ACI Standard 318.

First digit following the letter
mark indicates size of reinf. bo

Mark (C502) bar size - #5
Mark (S603) bar size - #6

Each truss bar, types 12, 13, 14
29, 30 and 31, may be replaced b
two (2) straight bars (one top a
bottom) of the same bar size as
bar. Payment in either case shal
on truss bars as scheduled on pl

All dimensions in parentheses in
dimensions in a negative directi

SOUTH APPROACH

STATE OF MAINE
DEPARTMENT OF TRANSPO

PORTLAND - S. PORTLA
OVER FORE RIV
CUMBERLAND CO

SUPERSTRUCT
BAR SCHEDUL

SHEET 157 OF 182 AUGUSTA, MA

DTP	HCB	6-94
CHECKED		
REVISION		
FIELD CHANGES		

PLANS

REINFORCING STEEL SCHEDULE

BENT BARS

MARK	NO.	LENGTH	TYPE	A	B	C	D	E	F	G	H	O	R	LOCATION	REMARKS
S6224	70	41'-7"	10	3'-4"	28'-0"	9'-7"	0'-8"		—	0'-1"	0'-6"		0'-6"	Slab transverse	
S6226	70	60'-0"	14	0'-8"	8'-4"	7'-7"	7'-6"	4'-0"	(0'-1")	0'-7"	0'-6"	0'-10"	0'-0"	Slab transverse	
S6227	22	47'-9"	11	16'-5"	28'-0"	3'-4"			0'-8"	—			0'-1"	Slab transverse	
S6228	22	51'-0"	32	16'-5"	28'-0"	3'-6"	3'-1"		0'-1"	—			0'-8"	Slab transverse	
S6229	22	31'-9"	15	0'-0"	9'-3"	7'-7"	7'-6"	6'-8"	0'-7 1/4"	0'-7"		0'-10"	—	Slab transverse	
S6230	24	47'-9"	11	16'-5"	28'-0"	3'-4"			0'-8 7/8"	—			0'-1"	Slab transverse	
S6231	24	51'-0"	32	16'-5"	28'-0"	3'-6"	3'-1"		0'-1"	—			0'-8 7/8"	Slab transverse	
S6232	24	31'-9"	15	0'-0"	9'-3"	7'-7"	7'-6"	6'-8"	0'-8"	0'-7"		0'-10"	—	Slab transverse	
S6233	24	47'-9"	11	16'-5"	28'-0"	3'-4"			0'-9 3/4"	—			0'-1"	Slab transverse	
S6234	24	51'-0"	32	16'-5"	28'-0"	3'-6"	3'-1"		0'-1"	—			0'-9 3/4"	Slab transverse	
S6235	24	31'-9"	15	0'-0"	9'-3"	7'-7"	7'-6"	6'-8"	0'-8 3/4"	0'-7"		0'-10"	—	Slab transverse	
S6236	26	41'-7"	10	3'-4"	28'-0"	9'-7"	0'-8"		—	0'-1 1/2"	0'-6"		0'-6"	Slab transverse	
S6238	26	60'-0"	14	0'-8"	8'-4"	7'-7"	7'-6"	4'-0"	(0'-0 1/2")	0'-7"	0'-6"	0'-10"	0'-0"	Slab transverse	
S6239	26	47'-9"	11	16'-5"	28'-0"	3'-4"			0'-10 5/8"	—			0'-1 1/2"	Slab transverse	
S6240	26	51'-0"	32	16'-5"	28'-0"	3'-6"	3'-1"		0'-1 1/2"	—			0'-10 5/8"	Slab transverse	
S6241	26	31'-9"	15	0'-0"	9'-3"	7'-7"	7'-6"	6'-8"	0'-9 1/2"	0'-7"		0'-10"	—	Slab transverse	
S6250	277	41'-11"	34	25'-6"	16'-5"					—	1'-6"		0'-0"	Slab transverse	
S6251	374	41'-11"	34	25'-6"	16'-5"					—	VARIES		0'-0"	Slab transverse	13 sets of 20 and 6 sets of 19, H varies between each set 1'-6 " to 0'-0 " by 1 "
S6252	106	41'-11"	34	25'-6"	16'-5"					VARIES	—		0'-0"	Slab transverse	1 set of 22 and 4 sets of 21, G varies between each set 0'-0 " to 0'-4 1/2 " by 1 1/8 "
S6253	14	41'-11"	34	25'-6"	16'-5"					0'-4 5/8"	—		0'-0"	Slab transverse	
S6254	277	33'-2"	34	16'-9"	16'-5"					—	1'-2"		0'-0"	Slab transverse	
S6255	374	33'-2"	34	16'-9"	16'-5"					—	VARIES		0'-0"	Slab transverse	11 sets of 26 and 4 sets of 22, H varies between each set 1'-2 " to 0'-0 " by 1 "
S6256	106	33'-2"	34	16'-9"	16'-5"					VARIES	—		0'-0"	Slab transverse	1 set of 22 and 4 sets of 21, G varies between each set 0'-0 " to 0'-3 1/2 " by 7/8"
S6257	14	33'-2"	34	16'-9"	16'-5"					0'-3 5/8"	—		0'-0"	Slab transverse	
S6258	153	9'-6"	11	6'-0"	3'-6"	0'-0"			0'-2 3/4"	—			—	Slab transverse	
S6259	124	9'-6" TO 9'-10"	11	6'-0"	VARIES	0'-0"			0'-2 3/4"	—			—	Slab transverse	1 set of 24 and 4 sets of 25, B varies between each set 3'-6 " to 3'-10 " by 1 "
S6260	269	9'-10" TO 12'-0"	11	6'-0"	VARIES	0'-0"			0'-1 7/8"	—			—	Slab transverse	1 set of 13 and 16 sets of 16, B varies between each set 3'-10 " to 6'-0 " by 1 5/8 "
S6262	14	12'-0"	11	6'-0"	6'-0"	0'-0"			—	0'-3/4"			—	Slab transverse	
S6263	153	27'-1"	11	14'-9"	3'-6"	8'-10"			0'-6 7/8"	—			0'-4 1/8"	Slab transverse	
S6264	124	27'-1" TO 27'-5"	11	14'-9"	VARIES	8'-10"			0'-6 7/8"	—			0'-4 1/8"	Slab transverse	1 set of 24 and 4 sets of 25, B varies between each set 3'-6 " to 3'-10 " by 1 "
S6265	120	27'-5" TO 28'-2"	11	14'-9"	VARIES	8'-10"			0'-5 7/8"	—			0'-4 1/8"	Slab transverse	10 sets of 12, B varies between each set 3'-10 " to 4'-7 " by 1 "
S6266	149	28'-2" TO 29'-7"	11	14'-9"	VARIES	8'-10"			0'-3 1/2"	—			0'-3 1/4"	Slab transverse	1 set of 13 and 17 sets of 8, B varies between each set 4'-7 " to 6'-0 " by 1 "
S6267	211	29'-7"	11	14'-9"	6'-0"	8'-10"			0'-1 1/8"	—			0'-1 3/4"	Slab transverse	
S6268	14	29'-7"	11	14'-9"	6'-0"	8'-10"			—	0'-1 3/4"			0'-1"	Slab transverse	
S6269	397	41'-10"	10	0'-0"	3'-6"	37'-8"	0'-8"		—	—	0'-6"		1'-11 5/8"	Slab transverse	
S6270	270	41'-10"	10	0'-0"	3'-6"	37'-8"	0'-8"		—	—	0'-6"		VARIES	Slab transverse	1 set of 10 and 13 sets of 20, R varies between each set 1'-11 1/2 " to 0'-10 1/2 " by 1 "
S6271	104	41'-10"	10	0'-0"	3'-6"	37'-8"	0'-8"		—	—	0'-6"		0'-10 1/2"	Slab transverse	
S6275	199	52'-5 3/8"	28											Slab transverse	
S6276	199	40'-2 7/8"	29											Slab transverse	
S6277	199	39'-9 1/8"	30											Slab transverse	
S6278	199	51'-11 5/8"	31											Slab transverse	
S6279	397	30'-2"	16	0'-8"	29'-6"									Slab transverse	
S6280	397	60'-0"	11	15'-1"	44'-11"	0'-8"			—	0'-10 7/8"			—	Slab transverse	
S6281	397	45'-0"	11	15'-1"	29'-11"	0'-0"			—	0'-10 7/8"			—	Slab transverse	

F.H.W.A. REG. NO.	STATE	PROJ
1	MAINE	DPI-

DESIGNER	DATE
DESIGN-DETAILED DTP	6-94
CHECKED HCB	6-94
REVISION	
FIELD CHANGES	

PLANS

NOTES:

All dimensions are out to out

Bending details and hooks shol the recommendations of the curr of ACI Standard 318.

First digit following the lett mark indicates size of reinf. b

Mark (C502) bar size -
Mark (S603) bar size -

Each truss bar, types 12, 13, 29, 30 and 31, may be replaced two (2) straight bars (one top bottom) of the same bar size as bar. Payment in either case sha on truss bars as scheduled on p

SOUTH APPROACH

STATE OF MAIN
DEPARTMENT OF TRANSP

PORTLAND - S. PORTL
OVER FORE RI
CUMBERLAND C

SUPERSTRUC
BAR SCHEDUL

SHEET 158 OF 182 AUGUSTA, M

F.H.W.A. REG. NO.	STATE	PROJE
1	MAINE	DPI-

BAR TYPE BENDING DIAGRAMS

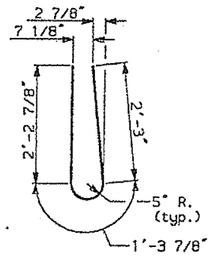

type 1

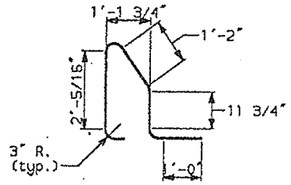

type 2

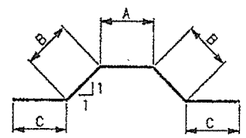

type 4

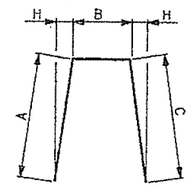

type 5

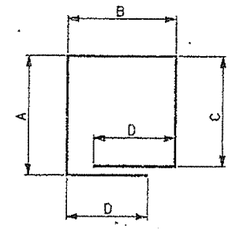

type 6

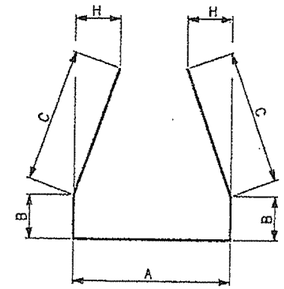

type 7

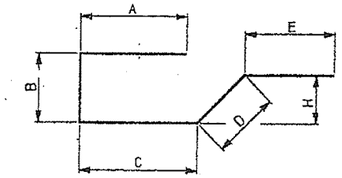

type 8

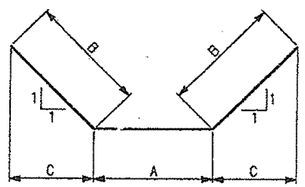

type 9

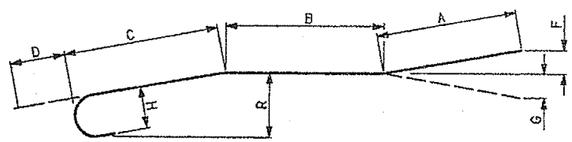

type 10

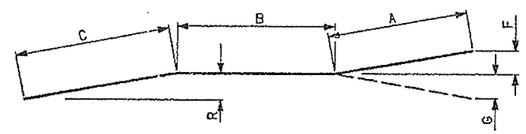

type 11

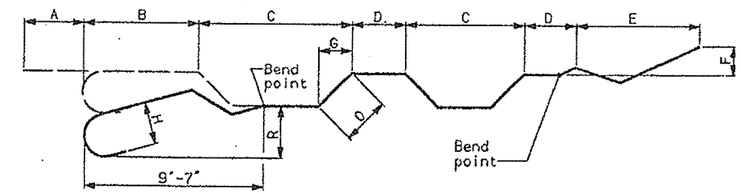

type 12

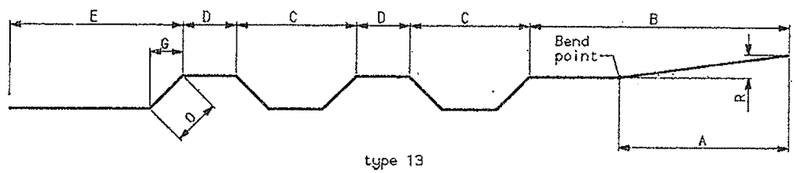

type 13

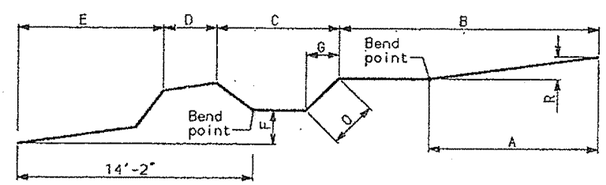

type 15

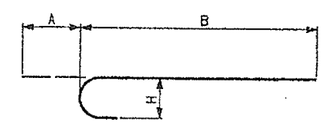

type 16

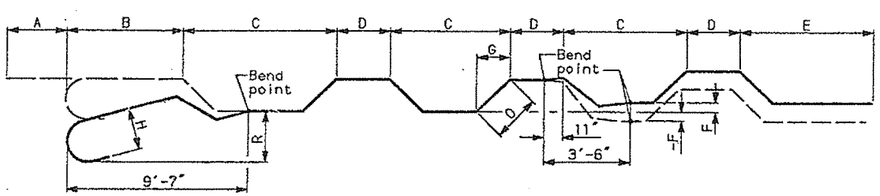

type 14

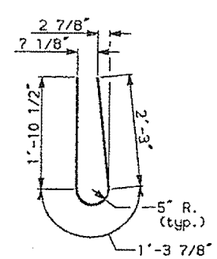

type 20

NOTES:

All dimensions are out to out of

Bending details and hooks shall c
the recommendations of the curren
of ACI Standard 318.

First digit following the letter
mark indicates size of reinf. bar

Mark (C502) bar size - #5
Mark (S603) bar size - #6

Each truss bar, types 12, 13, 14,
29, 30 and 31, may be replaced by
two (2) straight bars (one top an
bottom) of the same bar size as t
bar. Payment in either case shall
on truss bars as scheduled on pla

DESI	NER	BY	DATE
DESIGN-DETAILED	DTP	DTP	6-94
CHECKED	HCB		6-94
REVISION			
FIELD CHANGES			

PLANS

sa.bar.types.1

SOUTH APPROACH

STATE OF MAINE
DEPARTMENT OF TRANSP

PORTLAND - S. PORTL
OVER FORE RI
CUMBERLAND C

SUPERSTRUC
BAR TYPES

SHEET 159 OF 182 AUGUSTA, MA

F.H.W.A. REG. NO.	STATE	PROJ
1	MAINE	DPI

BAR TYPE BENDING DIAGRAMS

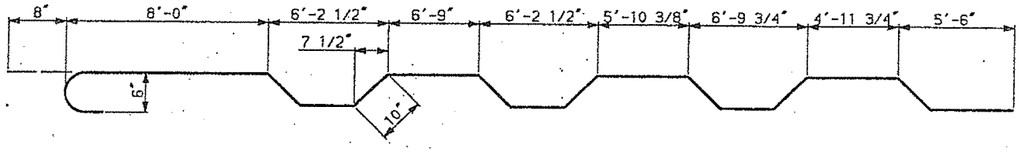

type 28

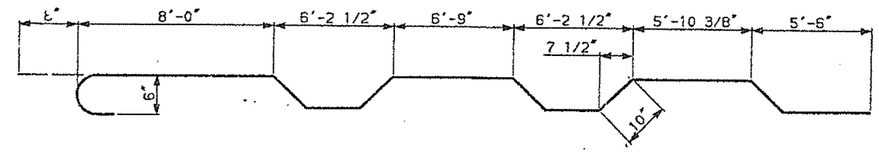

type 29

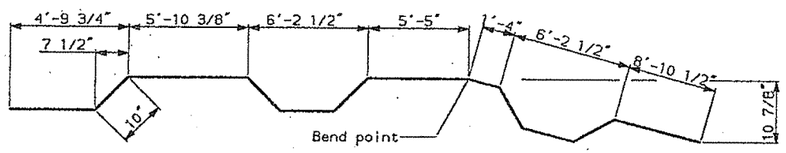

type 30

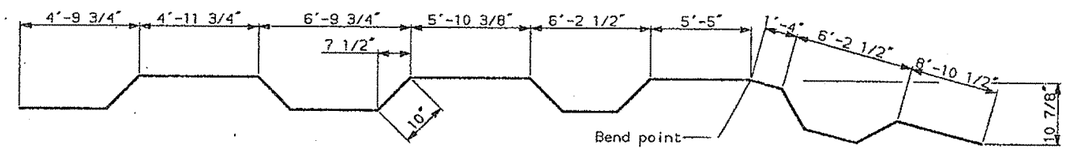

type 31

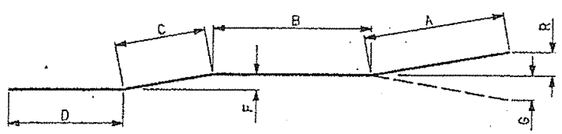

type 32

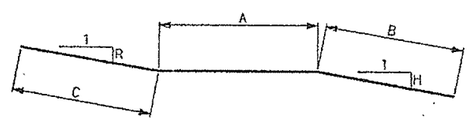

type 33

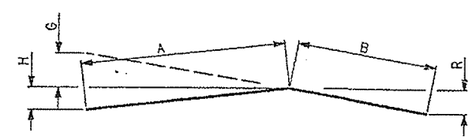

type 34

NOTES:

All dimensions are out to out of re

Bending details and hooks shall cor the recommendations of the current of ACI Standard 318.

First digit following the letter of mark indicates size of reinf. bar.

Mark (C502) bar size - #5
Mark (S603) bar size - #6

Each truss bar, types 12, 13, 14, 1 29, 30 and 31, may be replaced by two (2) straight bars (one top and bottom) of the same bar size as the bar. Payment in either case shall b on truss bars as scheduled on plans

DESIGN ENGINEER	BY	DATE
DESIGN-DETAILED	DTP	6-94
CHECKED	DTP	6-94
REVISION	MCB	
FIELD CHANGES		

PLANS

sa.bar.types.2

SOUTH APPROACH

STATE OF MAIN
DEPARTMENT OF TRANSP

PORTLAND - S. PORTL
OVER FORE RI
CUMBERLAND C

SUPERSTRUC
BAR TYPES

SHEET 160 OF 182 . AUGUSTA, M

F.H.W.A. REG. NO.	STATE	PROJ
1	MAINE	DPI-

See Substructure Plans
Contract DPI-0068(006)
(Approach Roadway and Approach Superstructure Contractors must coordinate details)

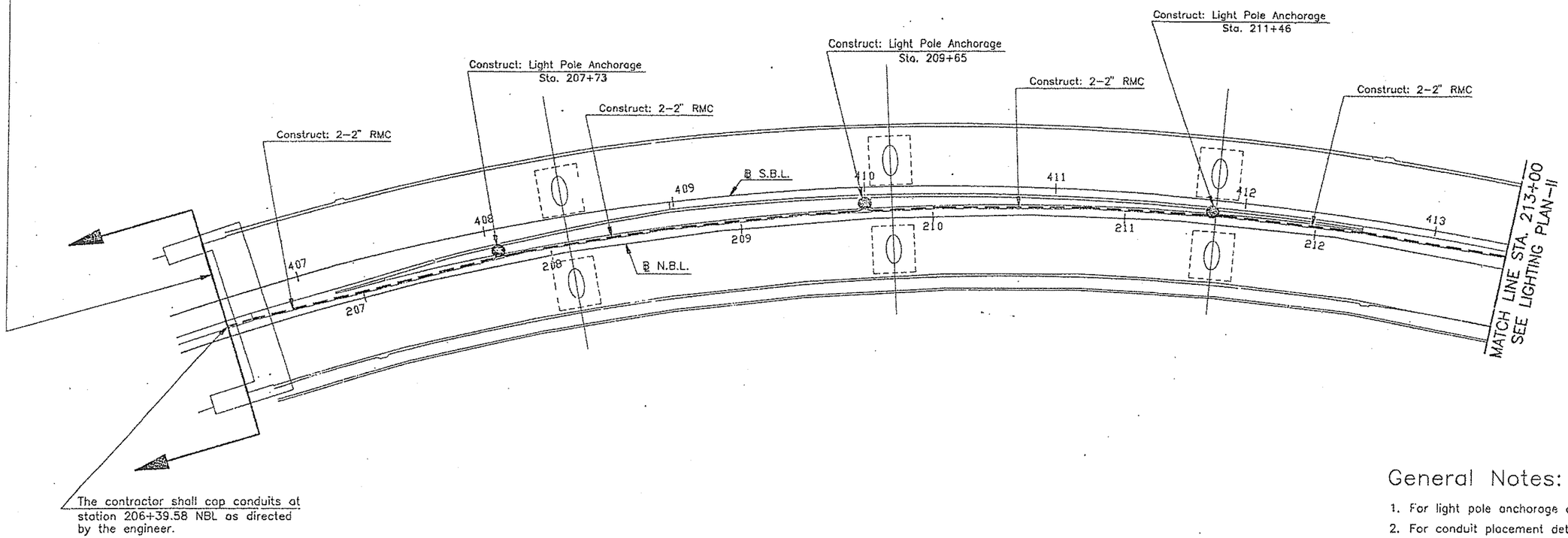

The contractor shall cap conduits at station 206+39.58 NBL as directed by the engineer.

General Notes:

1. For light pole anchorage details, see SLAB DETAILS
2. For conduit placement details, see SLAB DETAILS I

PROJECT DESIGN ENGINEER	BY	DATE
DESIGN-DETAILED	RAP	
CHECKED		
REVISIONS		
FIELD CHANGES		

PLANS

DATE: 6-20-94
W&A 1089/FST06.DWG

SOUTH APPROAC

STATE OF MAI
DEPARTMENT OF TRANS

PORTLAND – S. PORT
OVER FORE F
CUMBERLAND C

LIGHTING PL

SHEET 161 OF 182 AUGUSTA,

F.H.W.A. REG. NO.	STATE	PRO
1	MAINE	DPI-

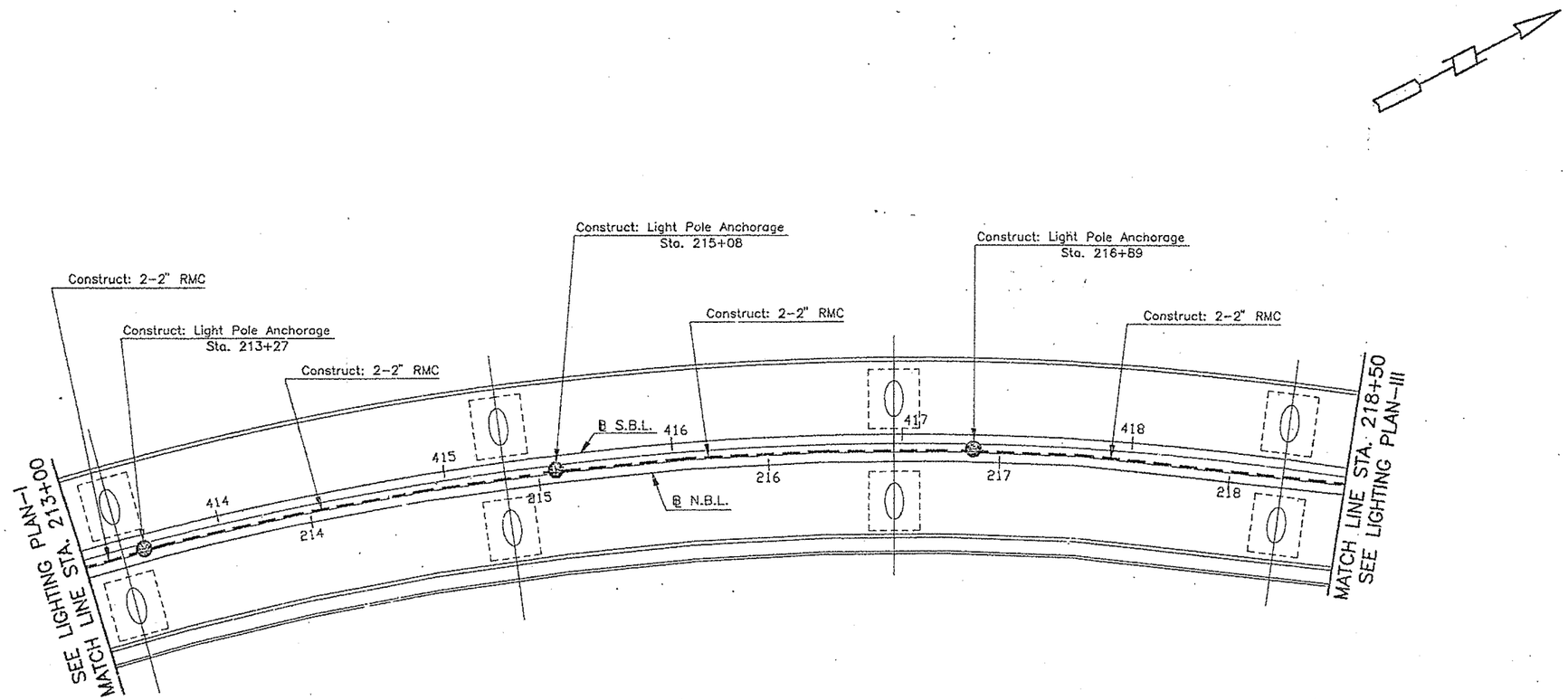

PROJECT DESIGN ENGINEER	BY	DATE
DES'N.-DETAILED	RAP	
CHECKED		
REVISIONS		
FIELD CHANGES		

PLANS

TE:6-20-94
A 1089/FST07.DWG

SOUTH APPROA

STATE OF MA
DEPARTMENT OF TRA

PORTLAND – S. POR
OVER FORE
CUMBERLAND

LIGHTING P

SHEET 162 OF 182 AUGUSTA

F.H.W.A. REG. NO.	STATE	PR
1	MAINE	DPI

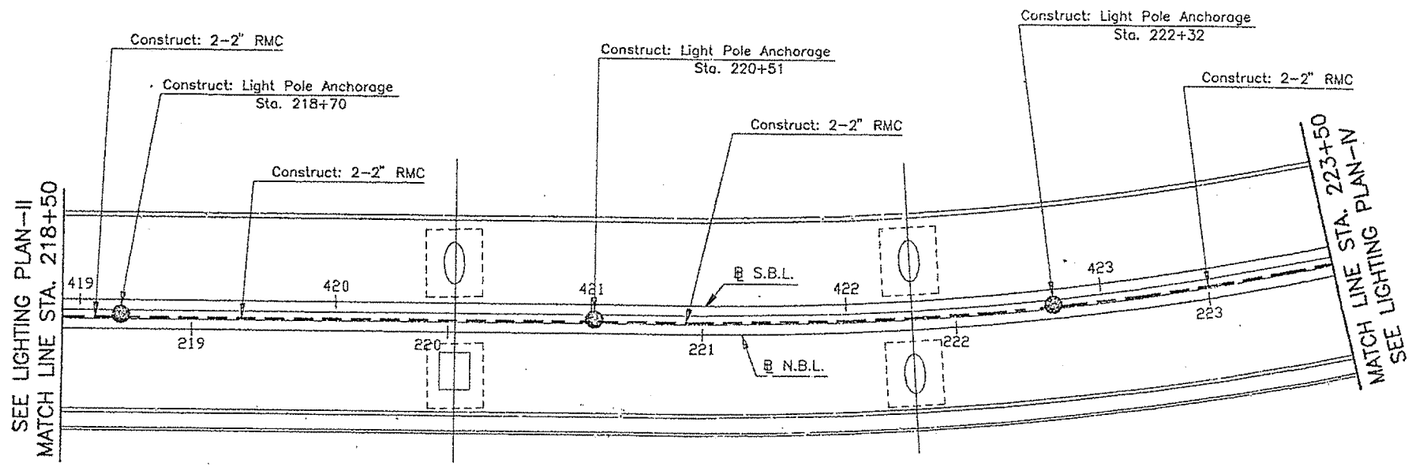

PROJECT DESIGN ENGINEER	BY	DATE
DESIGN-DETAILED	RAP	
CHECKED		
REVISIONS		
FIELD CHANGES		

PLANS

DATE: 6-20-94
A&A 1089/FST08.DWG

SOUTH APPROA

STATE OF MAI
DEPARTMENT OF TRAN

PORTLAND – S. PORT
OVER FORE F
CUMBERLAND C

LIGHTING PL

SHEET 163 OF 182 AUGUSTA,

F.H.W.A. REG. NO.	STATE	PROJ.
1	MAINE	DPI-

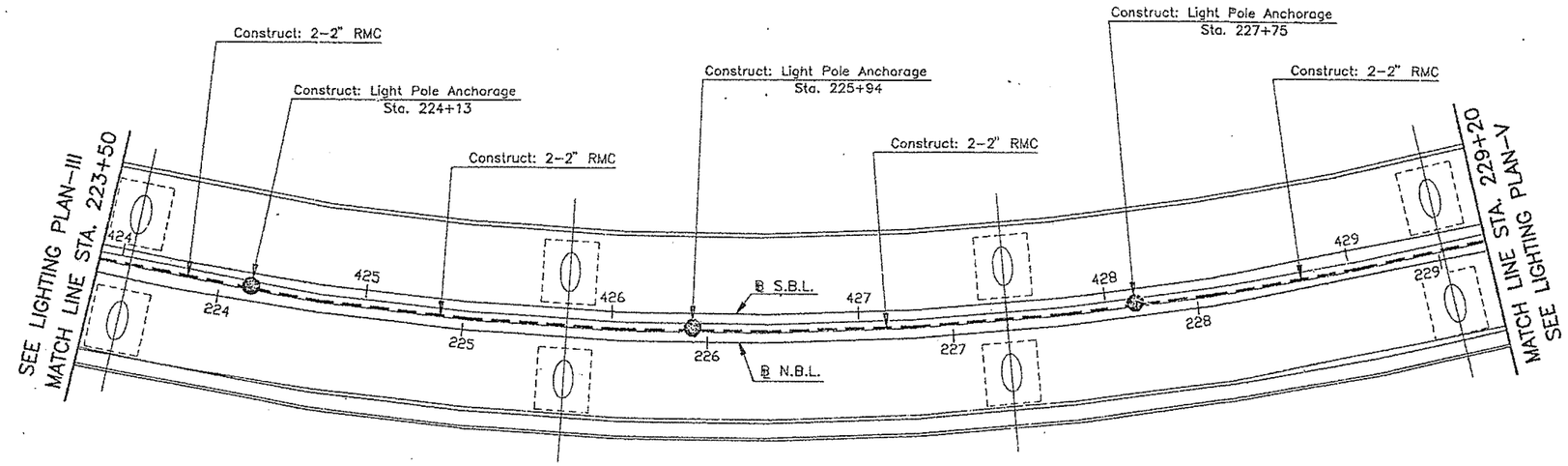

PROJECT DESIGN ENGINEER	BY	DATE
DESIGN-DETAILED	RAP	
CHECKED		
REVISIONS		
FIELD CHANGES		

PLANS

DATE: 6-21-94
A&A 1089/7ST09.DWG

SOUTH APPROAC

STATE OF MAI
DEPARTMENT OF TRANS

PORTLAND -- S. PORT
OVER FORE F
CUMBERLAND C

LIGHTING PL

SHEET 164 OF 182 AUGUSTA,

F.H.W.A. REC. NO.	STATE	PRO
1	MAINE	DPI-

See Bascule Superstructure Pla

Contract DPI-0068(005)

(Approach Superstructure and Bascule Superstructure Contractors must coordinate details)

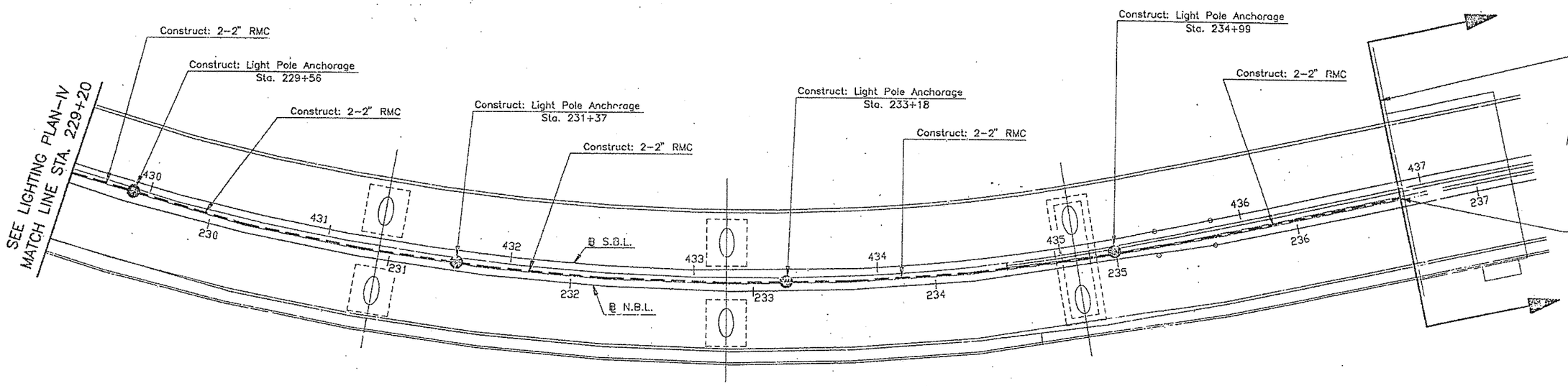

The contractor shall
station 236+62.01 N
by the engineer.

PROJECT	DESIGN ENGINEER	BY	DATE
	DESIGN-DETAILED	RAP	
PLANS	CHECKED		
	REVISIONS		
	FIELD CHANGES		

DATE:5-25-94
A&A 1089/FST10.DWG

SOUTH APPROAC

STATE OF MAIN
DEPARTMENT OF TRANS

PORTLAND – S. PORTI

OVER FORE R

CUMBERLAND C

LIGHTING PL

SHEET 165 OF 182 AUGUSTA,

F.H.W.A. REG. NO.	STATE	PROJ
1	MAINE	D-1

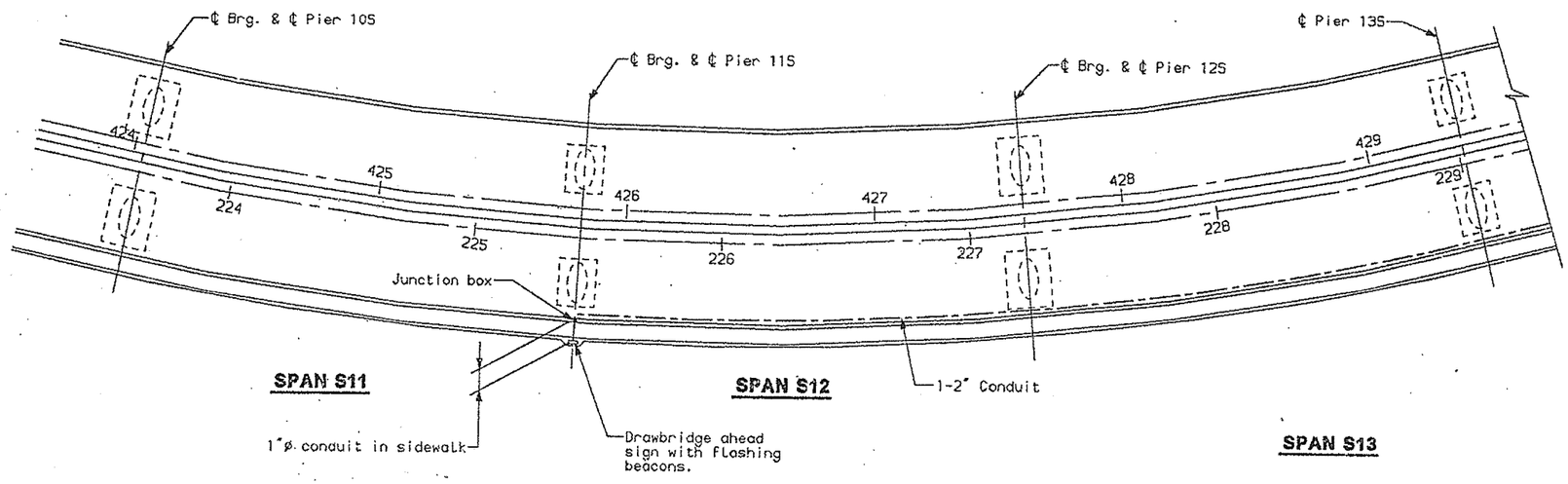

PLAN

LEGEND

———————— 2"ø RMC conduit encased in parapet.

DESIGN-DETAILED	MCI	ELS.	6-94
CHECKED			6-94
REVISION	MDB		
FIELD CHANGES			

PLANS

4-24-94

gas.1

SOUTH APPROACH

STATE OF MAIN
DEPARTMENT OF TRANSP

PORTLAND - S. PORTL
OVER FORE RI
CUMBERLAND C

CONDUIT LA
GATES AND SIG

SHEET 166 OF 182 AUGUSTA, M

F.H.W.A. REG. NO.	STATE	FED
1	MAINE	DPI

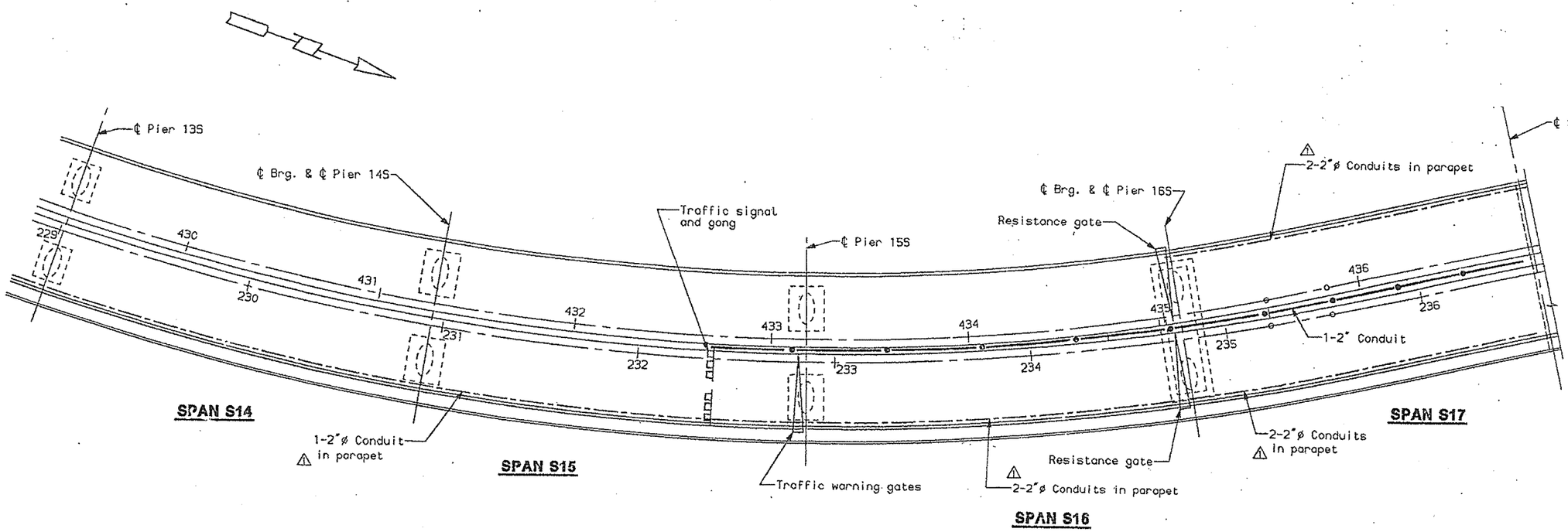

PLAN

LEGEND

2"ø RMC conduit in parapet.

2"ø RMC conduit in median.

P	DESIGN	KEY	BY	DATE
PLANS	DESIGN-DETAILED	MCI	ELS	6-94
	CHECKED		POB	6-94
	REVISION		MCI	10-94
	FIELD CHANGES			

4-24-94

JOB.2

SOUTH APPROACH

STATE OF MAIN
DEPARTMENT OF TRANSP

PORTLAND - S. PORTL
OVER FORE RI
CUMBERLAND C

CONDUIT LA
GATES AND SIGI

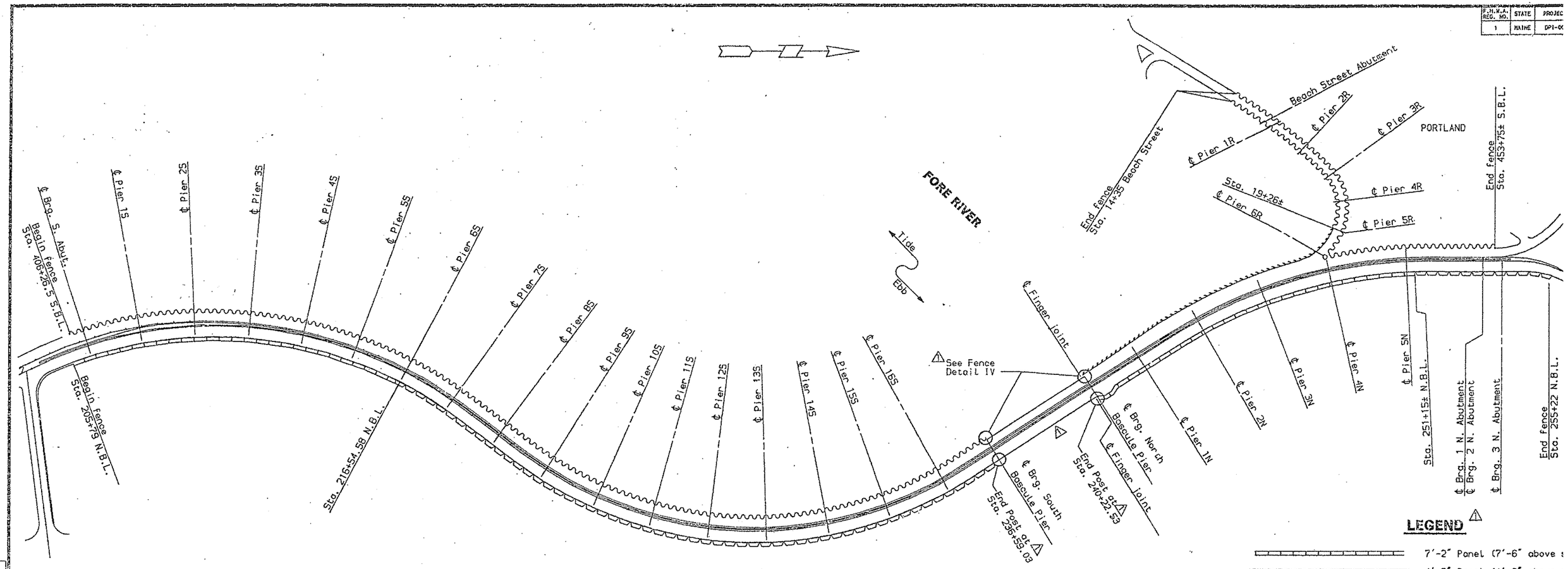

PLAN - BRIDGE FENCING LIMITS

LEGEND

- 7'-2" Panel (7'-6" above s
- 4'-2" Panel (4'-6" above s
- 1'-11" Panel (4'-7" above
- 4'-11" Panel (7'-7" above

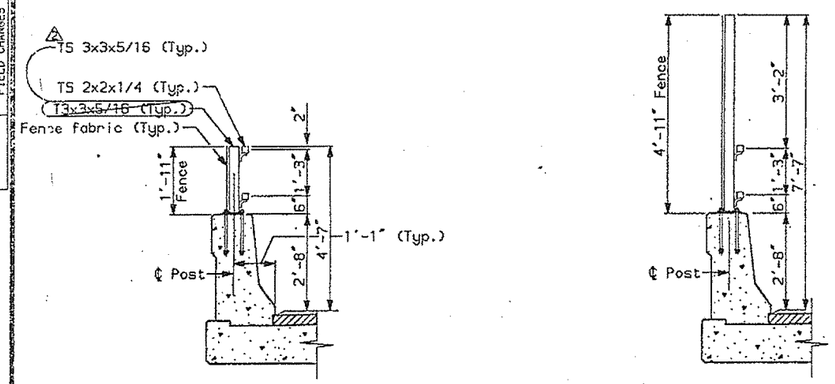

FENCE AT BARRIER

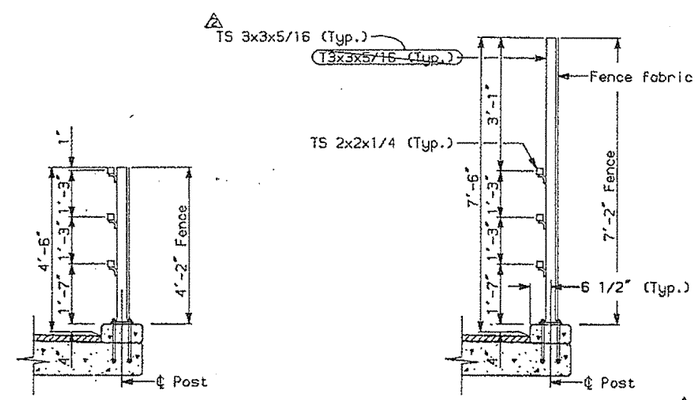

FENCE AT SIDEWALK CURB

TYPICAL SECTIONS

2 Revised, 10-7-94

1 Revise dimensions
Remove fence symbols at Bascule Span
Note added
Post station added 08-12-94
See Addendum #3

F.H.W.A. REG. NO.	STATE	PROJEC
1	MAINE	DPI-0

PROJECT	DESIGN-DETAILED	CHECKED	REVISION	FIELD CHANGES
PLANS	MCI	MCI	MCI	
	EAR			
	6-94	6-94	8-94	10-94

SOUTH APPROACH
STATE OF MAIN
DEPARTMENT OF TRANSP

PORTLAND - S. PORTL
OVER FORE RI
CUMBERLAND C

FENCE PL

SHEET 166 OF 182 AUGUSTA, M

fence_pl

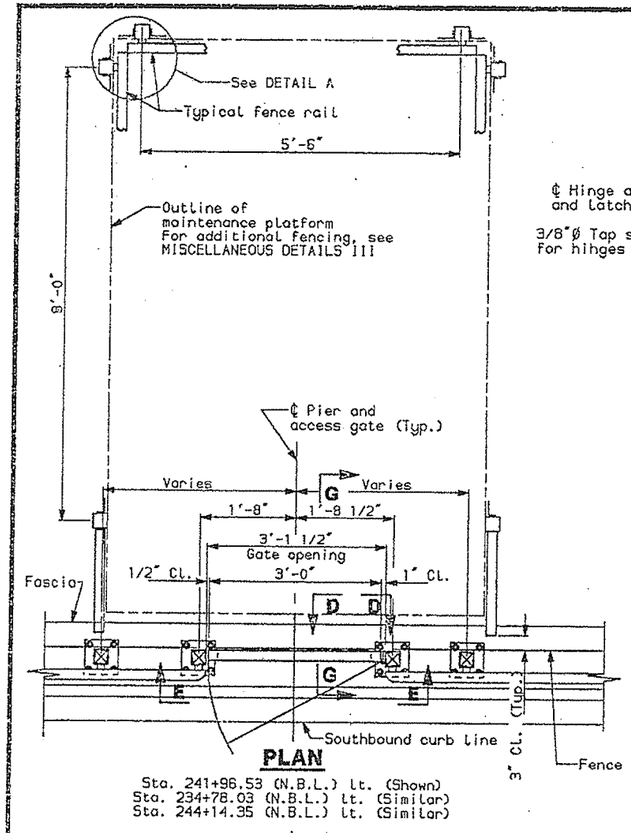

PLAN

Sta. 241+96.53 (N.B.L.) lt. (Shown)
Sta. 234+78.03 (N.B.L.) lt. (Similar)
Sta. 244+14.35 (N.B.L.) lt. (Similar)

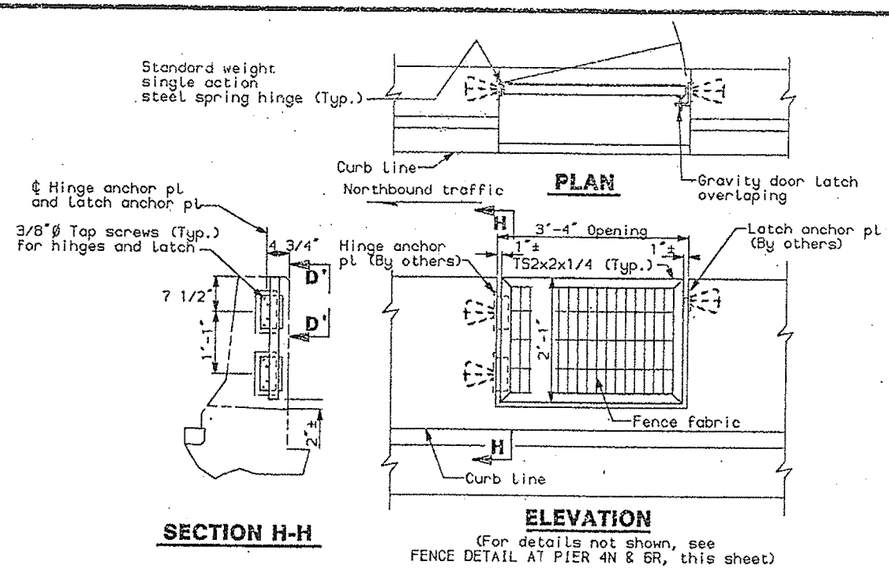

SECTION H-H

PLAN

ELEVATION

(For details not shown, see FENCE DETAIL AT PIER 4N & 6R, this sheet)

PARKING AREA GATE DETAIL

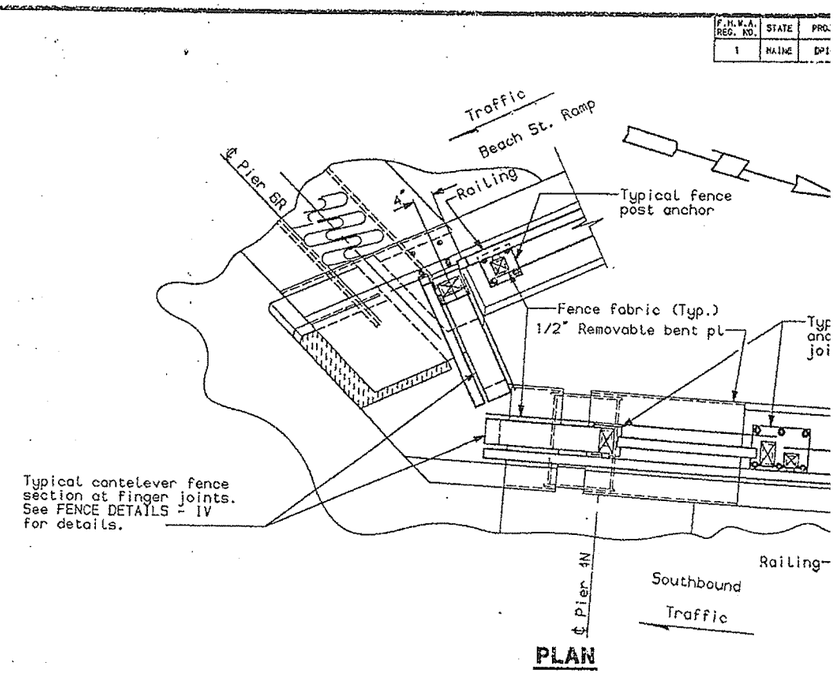

PLAN

FENCE DETAIL AT PIER 4N & 6R

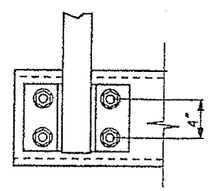

SECTION F-F

Typical post connection

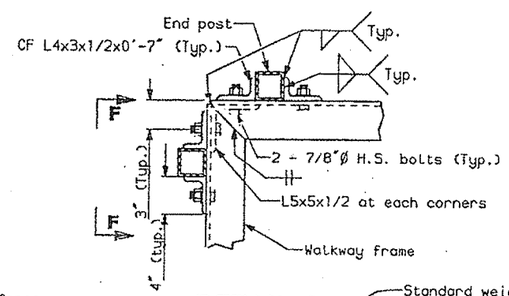

DETAIL A

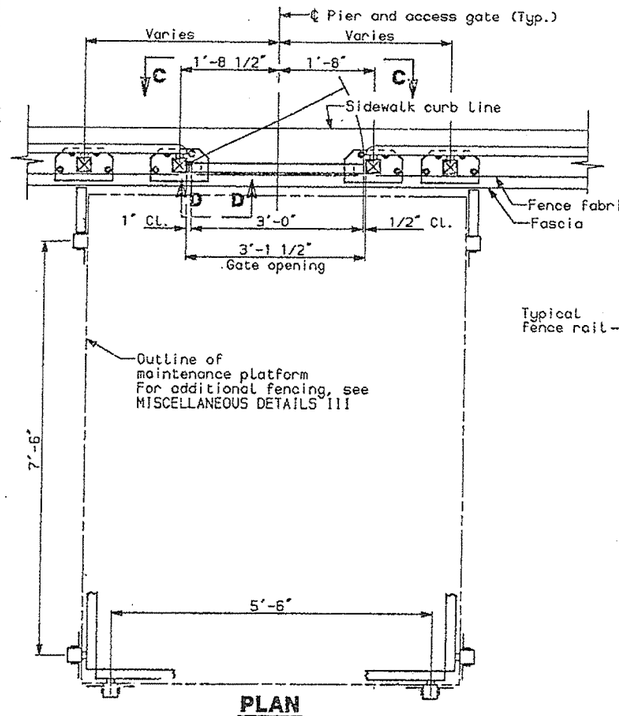

PLAN

Sta. 241+96.53 (N.B.L.) rt. (Shown)
Sta. 232+86.03 (N.B.L.) rt. (Similar)
Sta. 234+78.03 (N.B.L.) rt. (Similar)

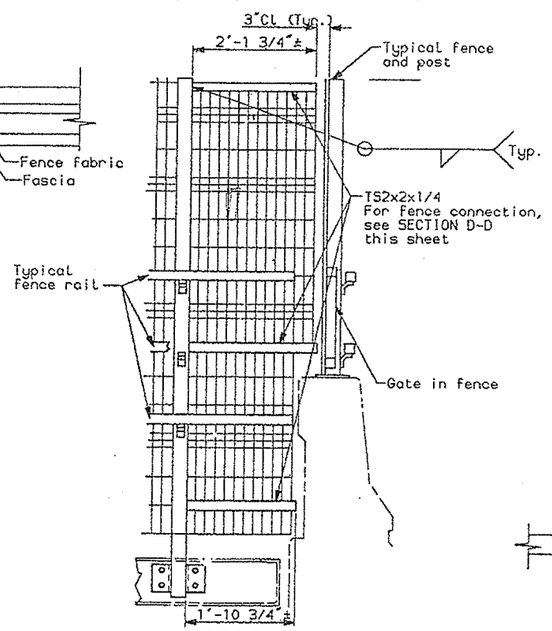

SECTION G-G

North Approach only

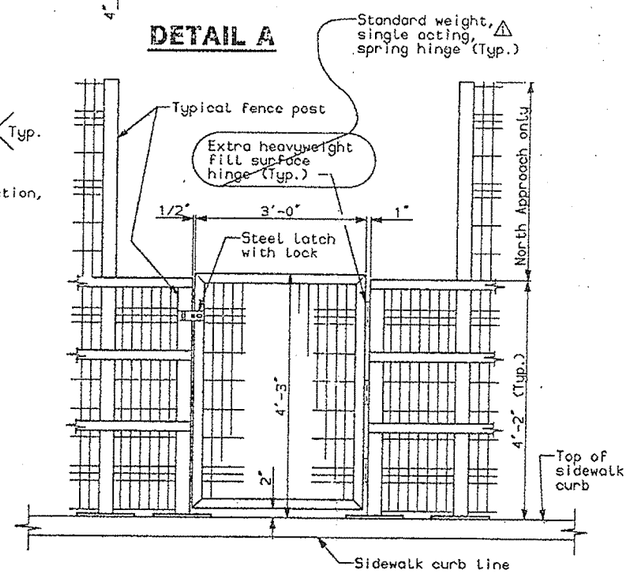

SECTION C-C

(Bottom longitudinal rail not shown) △1

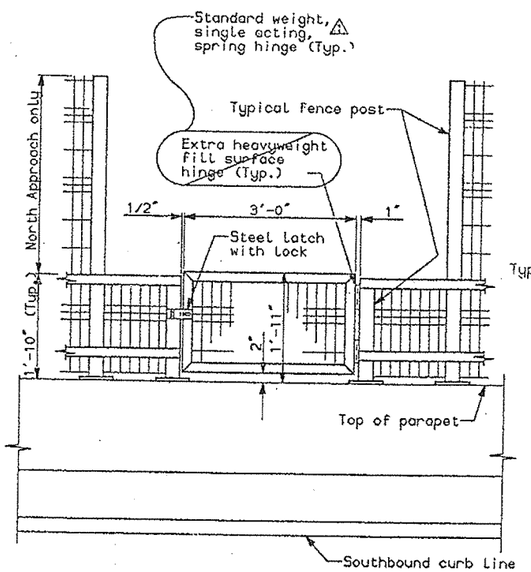

SECTION E-E

△1 Revise hinge description
Add Note 08-12-94
See Addendum #3

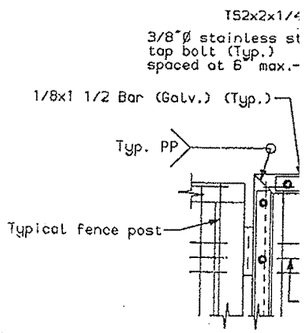

SECTION D

(Section D'-D' si

FENCE AND GATE DETALS AT TRAFFIC BARRIERS

F.H.W.A. REG. NO.	STATE	PRO
1	MAINE	DPI

DATE	BY		
6-94	EKR		DESIGN-DETAILED
6-94	JAR		CHECKED
8-94	MCI		REVISION
			FIELD CHANGES

PLANS

4-12-94
Fence.det.5

SOUTH APPROACH

STATE OF MAIN
DEPARTMENT OF TRANSP

PORTLAND - S. PORTL
OVER FORE RI
CUMBERLAND C

FENCE DETA

SHEET 169 OF 182 AUGUSTA MA

F.H.W.A. REG. NO.	STATE	PROJECT
1	MAINE	DPI-00

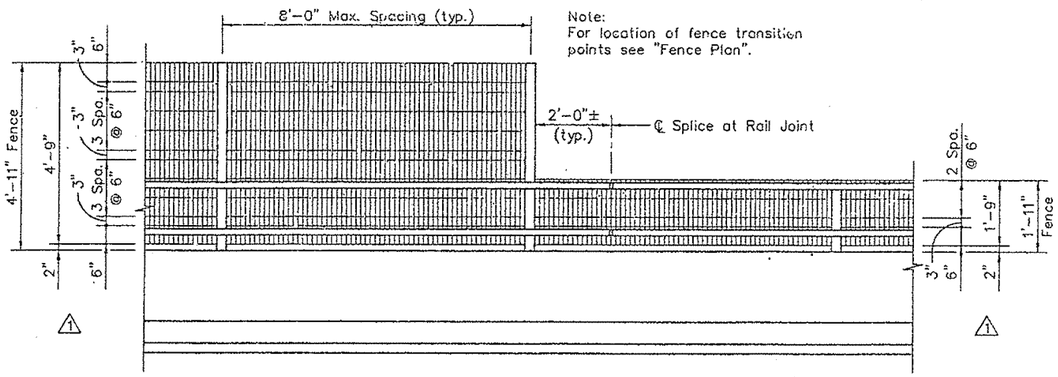

FENCE TRANSITION AT BARRIER

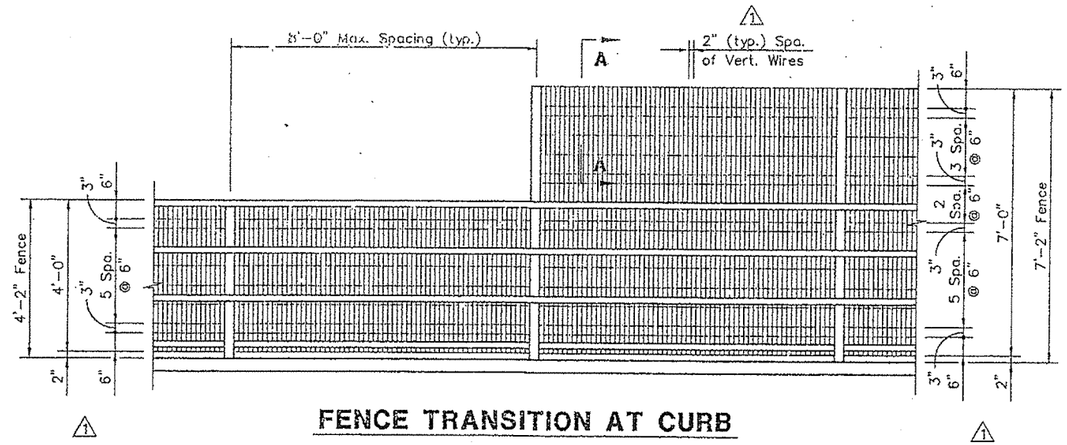

FENCE TRANSITION AT CURB

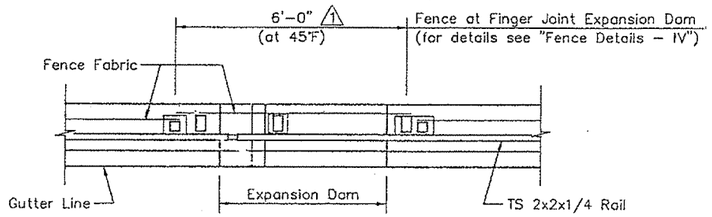

PLAN

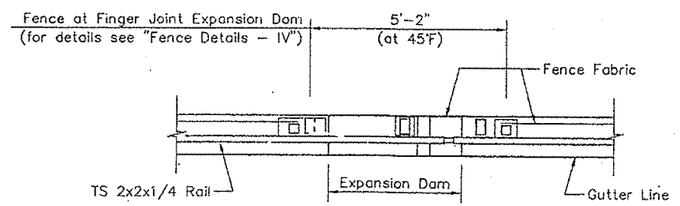

PLAN

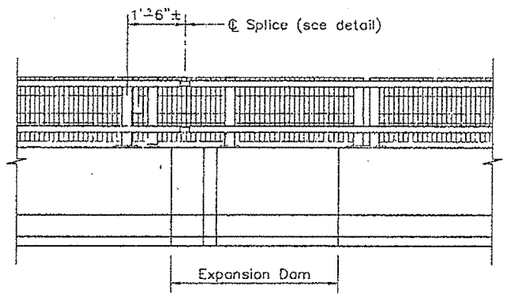

ELEVATION

FENCE AT BARRIER EXPANSION DAM

(1'-11" FENCE SHOWN; 4'-11" FENCE SIMILAR) △1

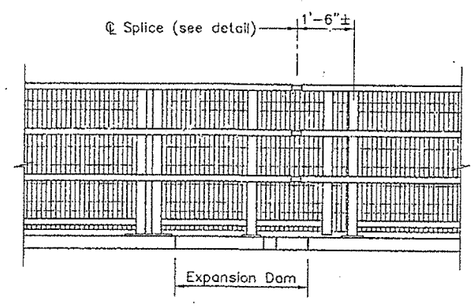

ELEVATION

FENCE AT CURB EXPANSION DAM

(4'-2" FENCE SHOWN; 7'-2" FENCE SIMILAR)

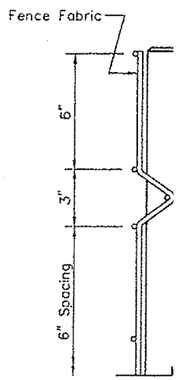

△1 SECTIO

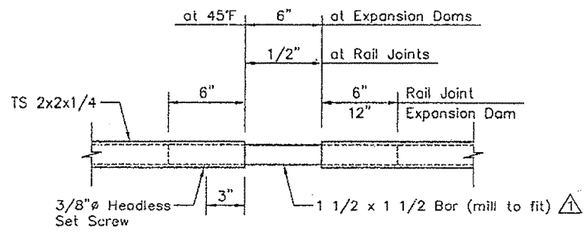

RAIL SPLICE DETAIL

Fence Notes:

1. Structural tubing (TS) shall confo A500, Grade B, and shall be galv accordance with ASTM A123.
2. Steel rail brackets and base plate to ASTM A709, Grade 36 and sho in accordance with ASTM A123.
3. △1 All fence hardware, including nuts and screws, shall be stainless ste requirements of ASTM A193. Anch conform to ASTM A307 and shall in accordance with ASTM A153.
4. For fence fabric material see Spe
5. Fence posts shall be set normal and shall be equally spaced. Post be determined by Contractor. Lon shall be installed parallel to each the top of the barrier or curb.
6. △2 In each fence post base plate, a hole is required centered under e

STEEL ALTERNATIVE SUPERS

△2 Revised per Addendum No.5.

△1 Add Section A–A. Add dimensions for fence fabric. Revise note 3. Revise dimensions at expansion dam. Add note to Rail Splice Detail. 7/28/94 See Addendum # 3

STATE OF MAINE
DEPARTMENT OF TRANSPO

PORTLAND - S. PORTLA

OVER FORE RIV

CUMBERLAND CO

FENCE DETAIL

SHEET 170 OF 182 AUGUSTA, MA

PLANS			
DESIGN	ED	RA	/94
CHECKED	WCE		5/94
REVISIONS	MCI		10/94
FIELD CHANGES			

FD2-S.DWG : 1=24

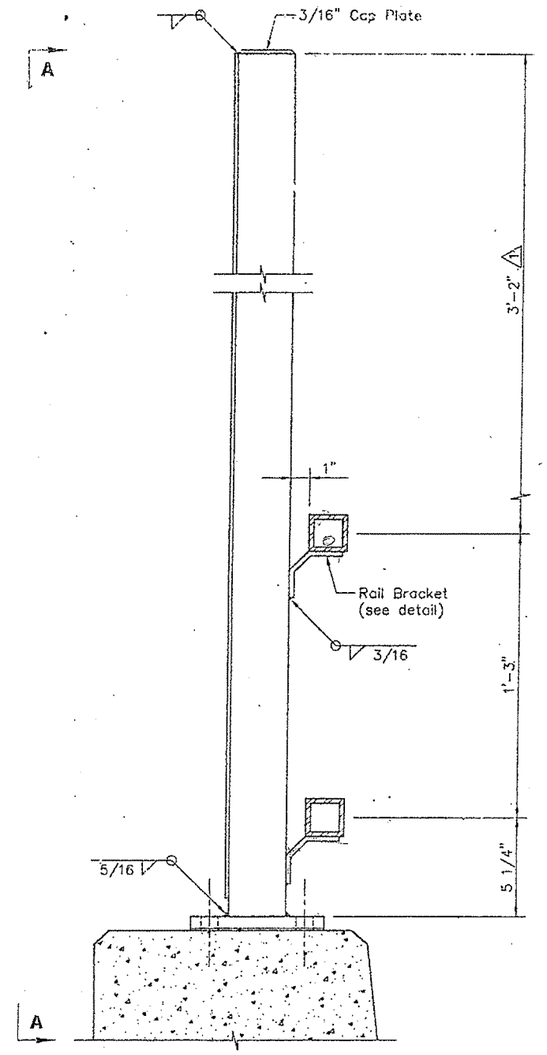

TYPICAL FENCE POST AT BARRIER

(4'-11" FENCE SHOWN; 1'-11" FENCE SIMILAR) △1

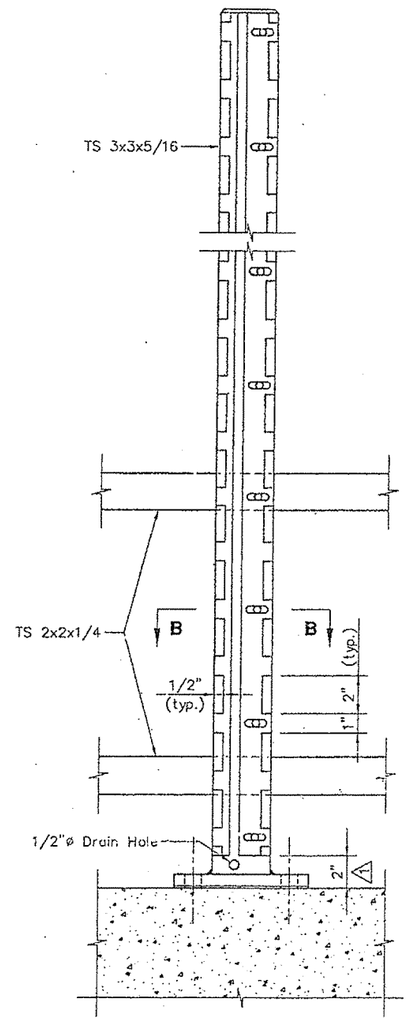

VIEW A-A

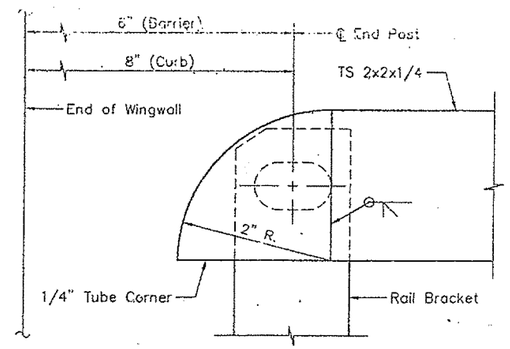

RAIL TERMINUS DETAIL

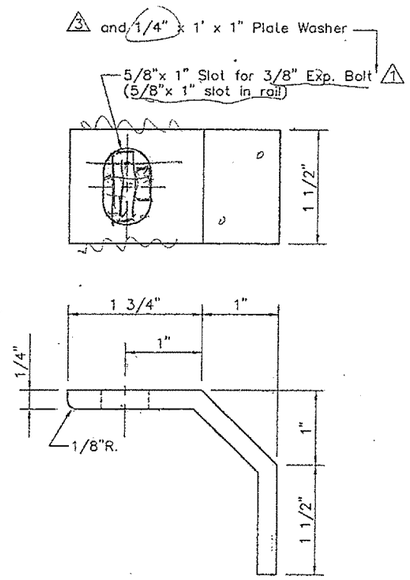

RAIL BRACKET DETAIL

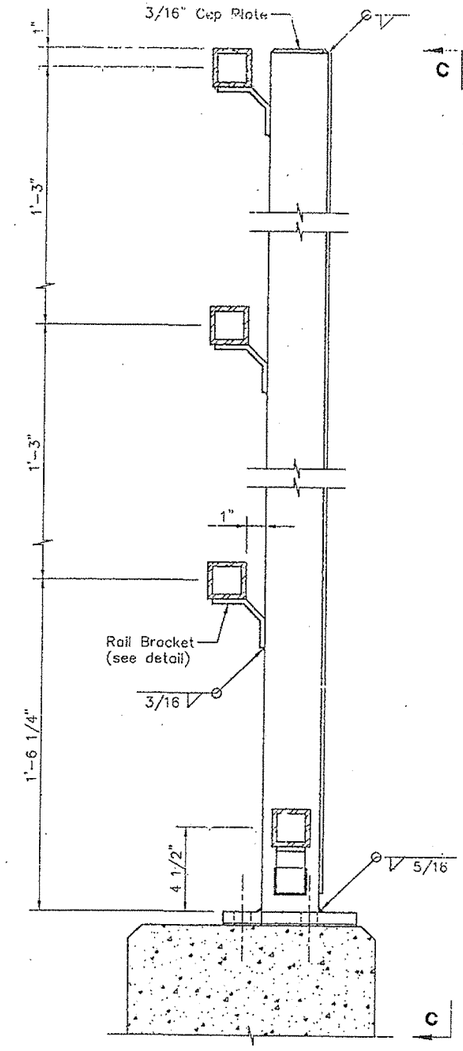

TYPICAL FENCE POST AT CURB

(4'-2" FENCE SHOWN; 7'-2" FENCE SIMILAR)

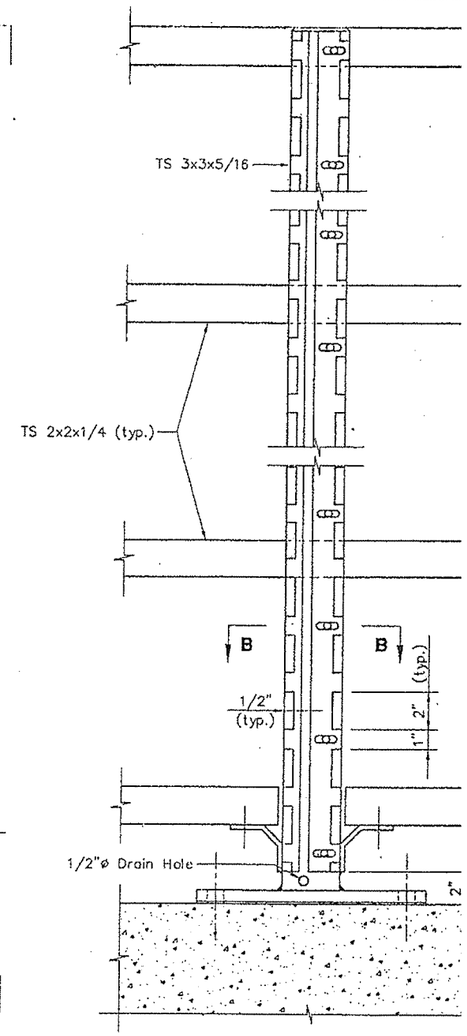

VIEW C-C

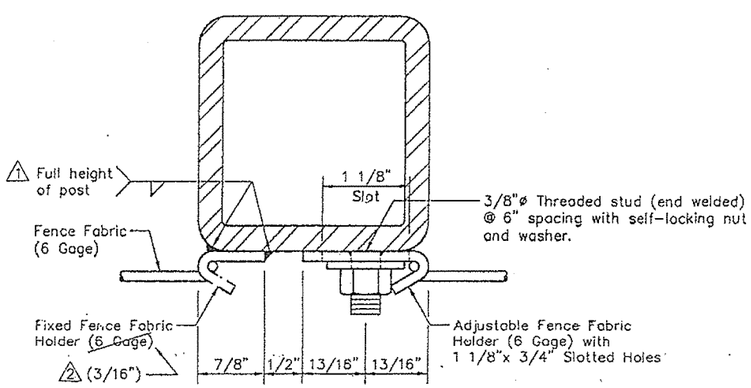

SECTION B-B

(INTERMEDIATE POST)

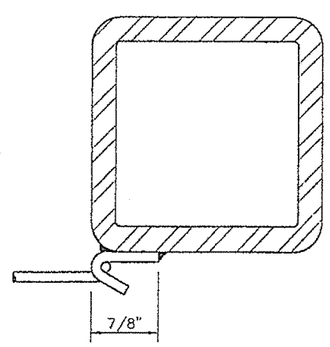

END POST (FIXED FABRIC HOLDER) △1

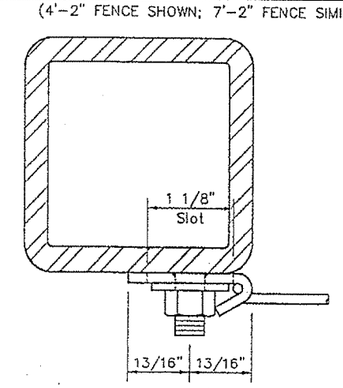

END POST (ADJUSTABLE FABRIC HOLDER) △1

△3 Revised per Addendum No.5.

△2 Revised per Addendum No.4.

△1 Revise fence heights. Clarify weld for fixed fabric holder. Revise connection at rail bracket detail. Shift fabric holders for end posts.
7/28/94
See Addendum # 3

Note:
1. Provide 3/8"ø drain holes at und
members 1'-0" from post connec
up-grade side.

STEEL ALTERNATIVE SUPERS

STATE OF MAINE
DEPARTMENT OF TRANSPO

PORTLAND - S. PORTLA

OVER FORE RIV

CUMBERLAND CO

FENCE DETAILS

SHEET 171 OF 182 AUGUSTA, MA

F.H.W.A. REG. NO.	STATE	PROJECT
1	MAINE	BPI-00

PLANS			
CHECKED	WCE	5/94	
REVISIONS	MCI	10/94	
FIELD CHANGES			

D3-S.DWG : 1=4

F.H.W.A. REG. NO	STATE	PROJECT NUMBER	SHEET NO.	TOTAL SHEETS
1	MAINE	DPI-3068(002)	1/2	182

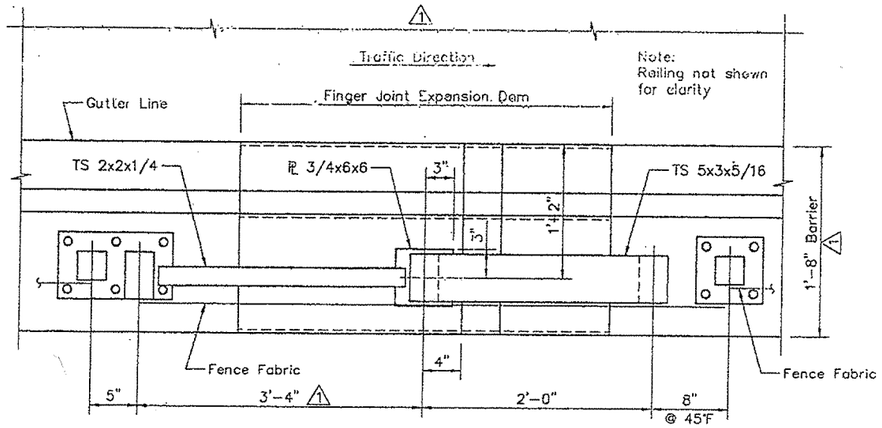

PLAN

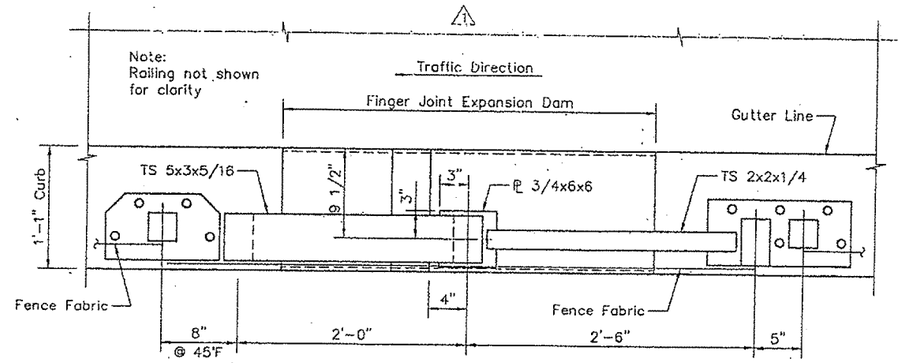

PLAN

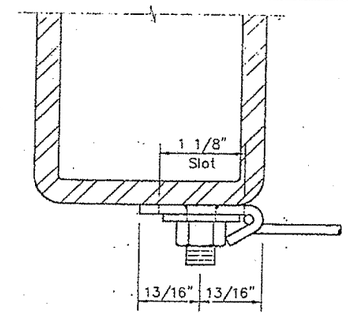

SECTION A-A
(SECTION A'-A' OPPOSITE HAND)

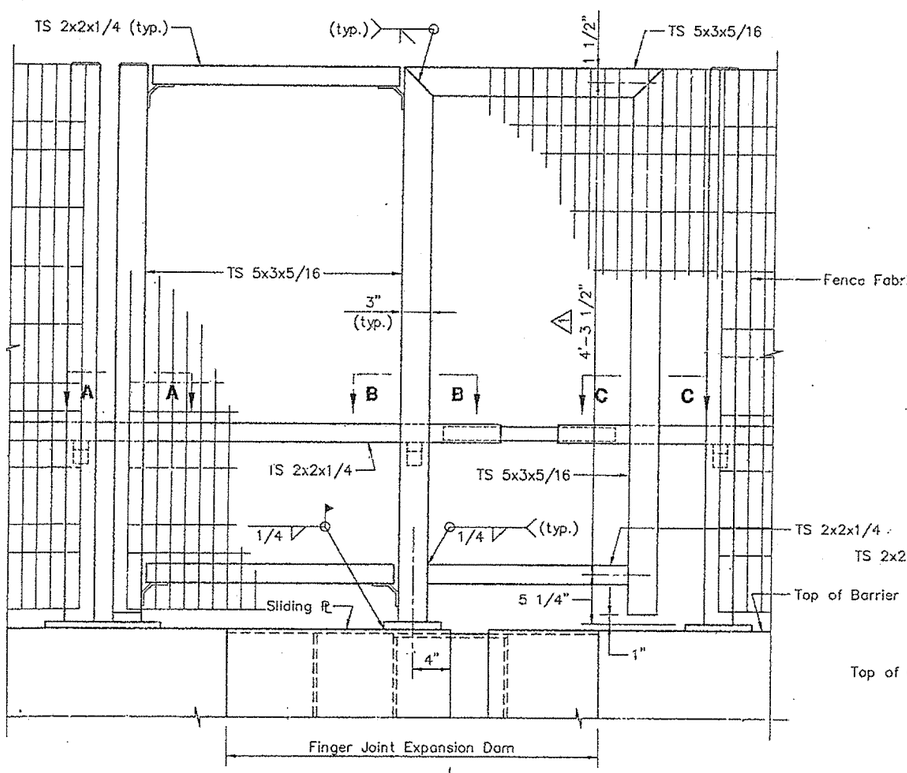

Approach side	Bascule side (North approach at bascule pier)
Bascule side	Approach side (South approach at bascule pier)

ELEVATION - FENCE AT BARRIER EXPANSION DAM
(4'-11" FENCE SHOWN; 1'-11" FENCE SIMILAR)

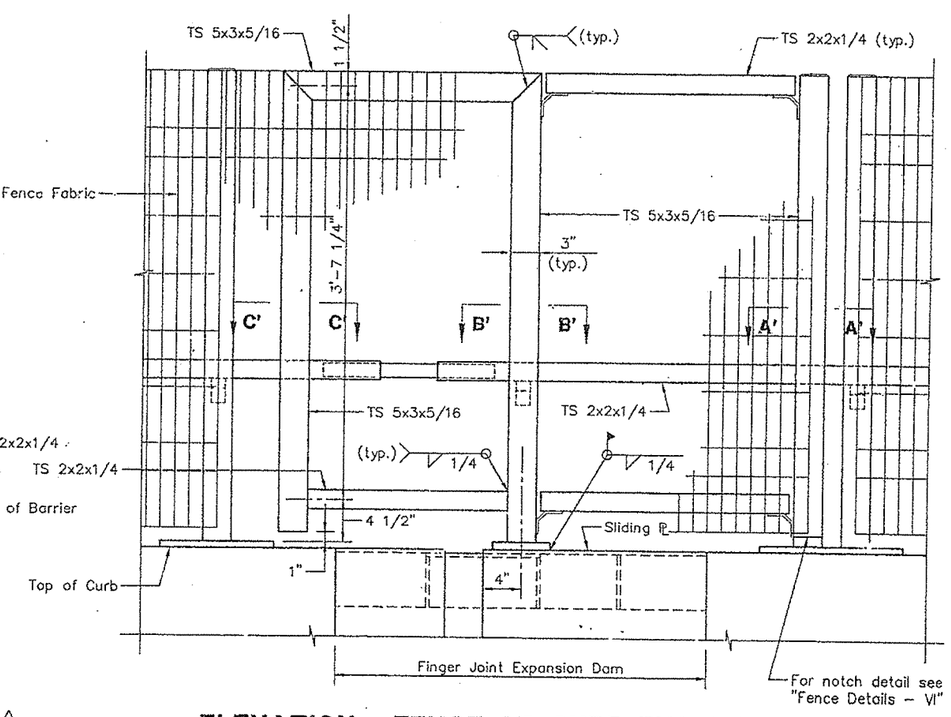

ELEVATION - FENCE AT CURB EXPANSION DAM
(4'-2" FENCE SHOWN; 7'-2" FENCE SIMILAR)

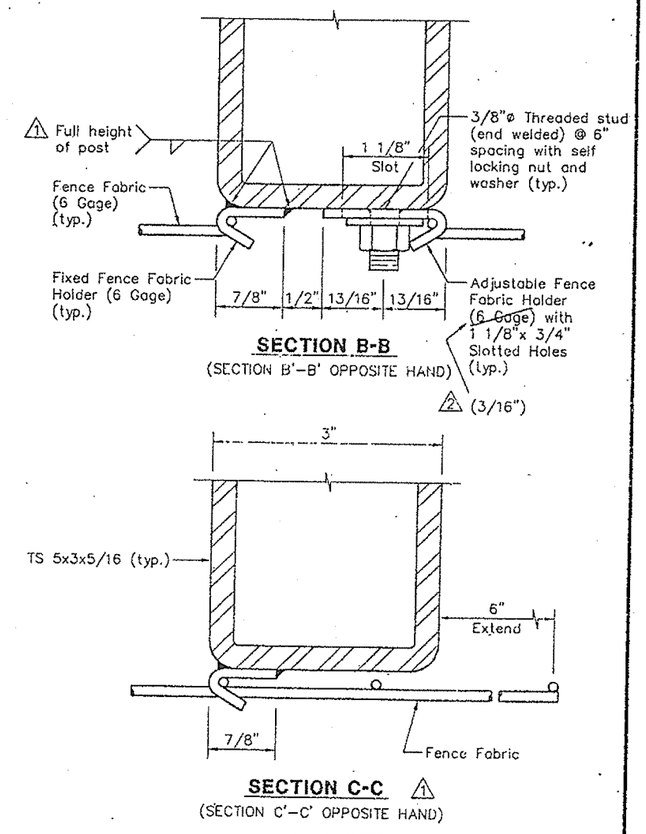

SECTION B-B
(SECTION B'-B' OPPOSITE HAND)

SECTION C-C
(SECTION C'-C' OPPOSITE HAND)

STEEL ALTERNATIVE SUPERSTRUCTURE

Revise fence heights. Shift fabric holders in Sections A-A and C-C. Clarify weld for fixed fabric holder. Revise dimensions at expansion dam. 7/28/94
Revise barrier width.
Add traffic direction.
Clarify details at joint.
See Addendum # 3

Note:
Locations of fence at finger joint expansion dams are:
1. Pier 4S
2. Pier 9S
3. Pier 13S
4. South Bascule Pier
5. North Bascule Pier
6. Pier 4N
7. Pier 6R

STATE OF MAINE
DEPARTMENT OF TRANSPORTATION

PORTLAND - S. PORTLAND BRIDGE
OVER FORE RIVER
CUMBERLAND COUNTY

FENCE DETAILS - IV

F.H.W.A. REG. NO.	STATE	PROJECT NUMBER	SHEET NO.	TOTAL SHEETS
1	MAINE	DPI-0369(002)	173	184

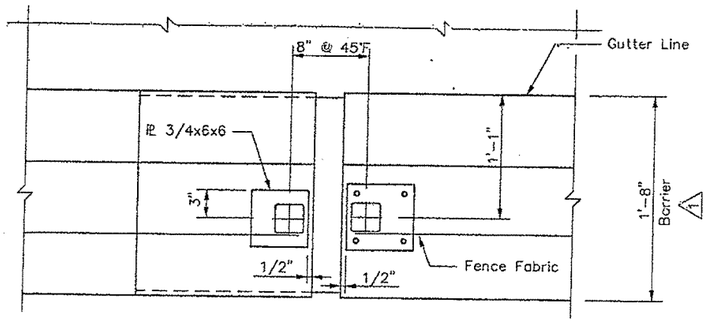

PLAN

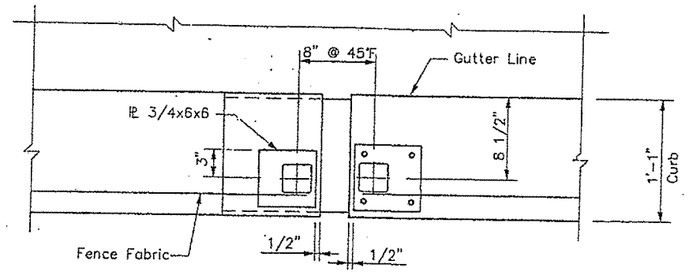

PLAN

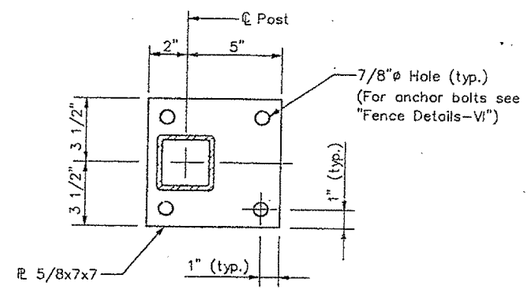

POST ANCHORAGE

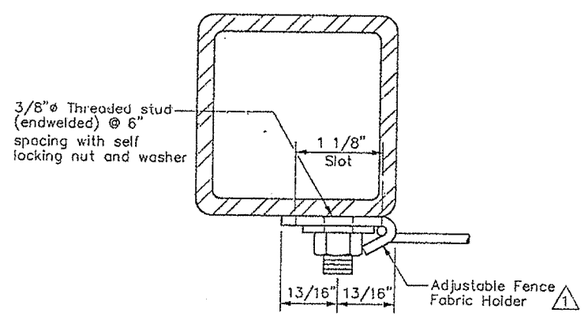

SECTION A-A

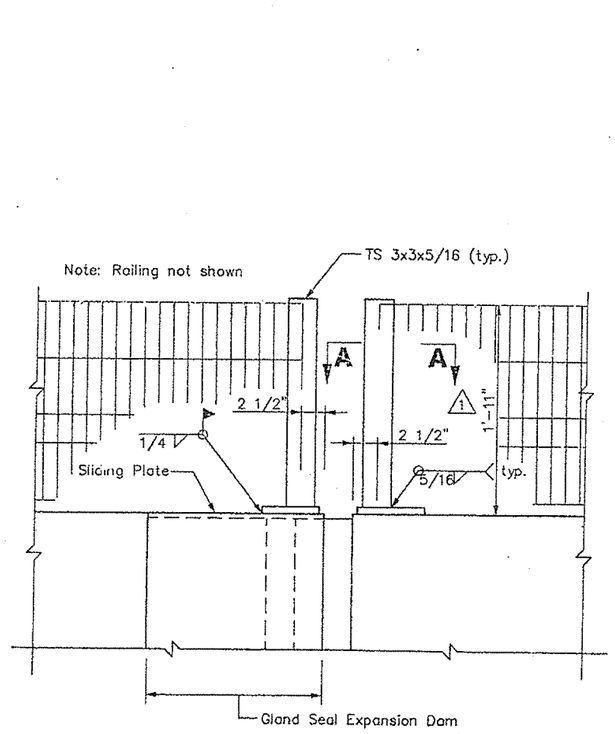

ELEVATION - FENCE AT BARRIER EXPANSION DAM

(1'-11" FENCE SHOWN; 4'-11" FENCE SIMILAR) 1

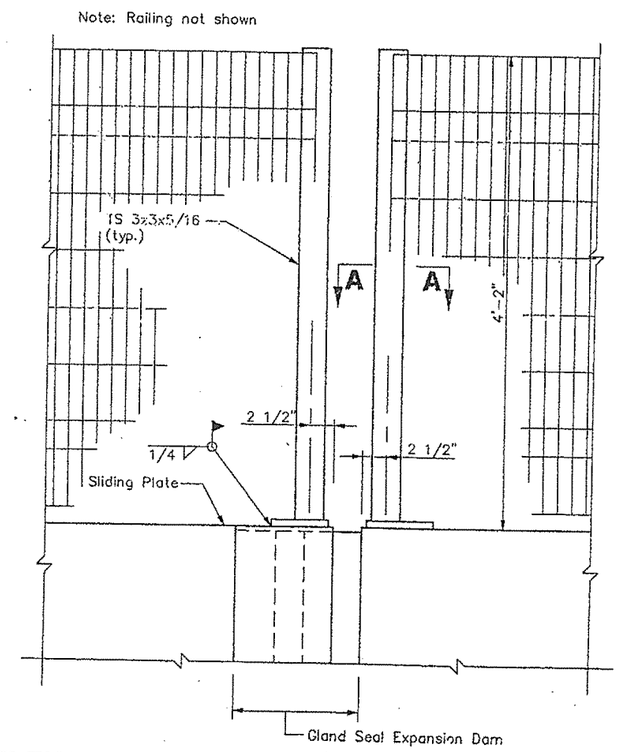

ELEVATION - FENCE AT CURB EXPANSION DAM

1 Revise fence heights. Shift fabric holder in Section A-A. 7/28/94
Revise barrier width.
See Addendum #3

Note:

Locations of fence at gland seal expansion dams are:

1. South Abutment
2. North Abutment Brg. 1
3. North Abutment Brg. 3
4. Pier 1R
5. Pier 3R

STEEL ALTERNATIVE SUPERSTRUCTURE

STATE OF MAINE
DEPARTMENT OF TRANSPORTATION

PORTLAND - S. PORTLAND BRIDGE

OVER FORE RIVER

CUMBERLAND COUNTY

FENCE DETAILS-V

F.H.W.A. REG. NO.	STATE	PROJECT NUMBER	SHEET NO.	TOTAL SHEETS
1	MAINE	DPI-0068(002)	173A	182

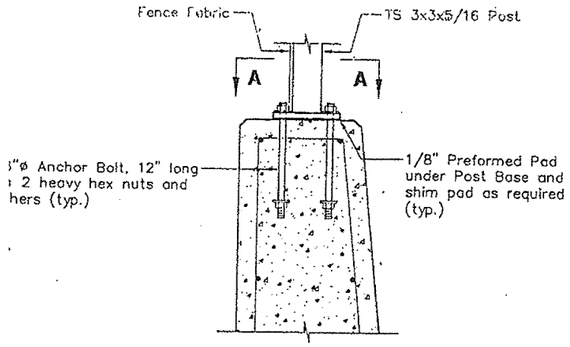

SECTION AT BARRIER

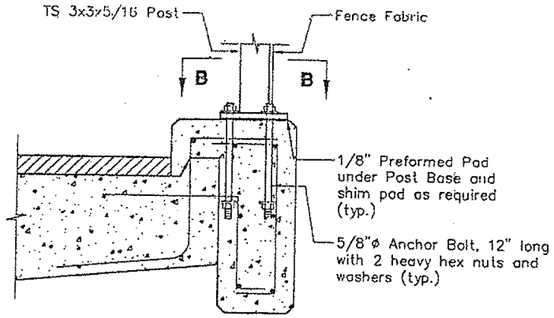

SECTION AT CURB

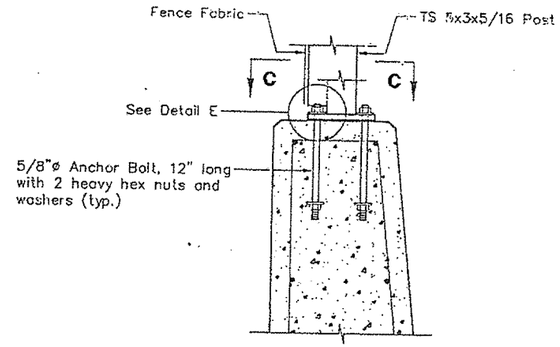

SECTION AT BARRIER

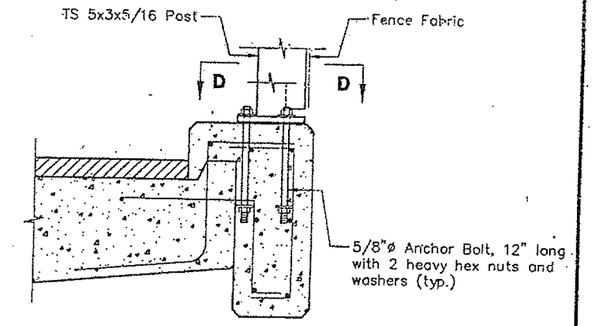

SECTION AT CURB

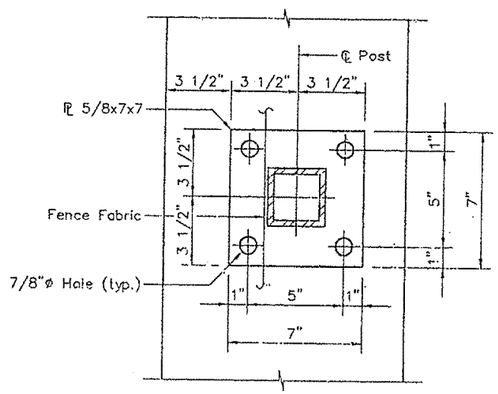

VIEW A-A

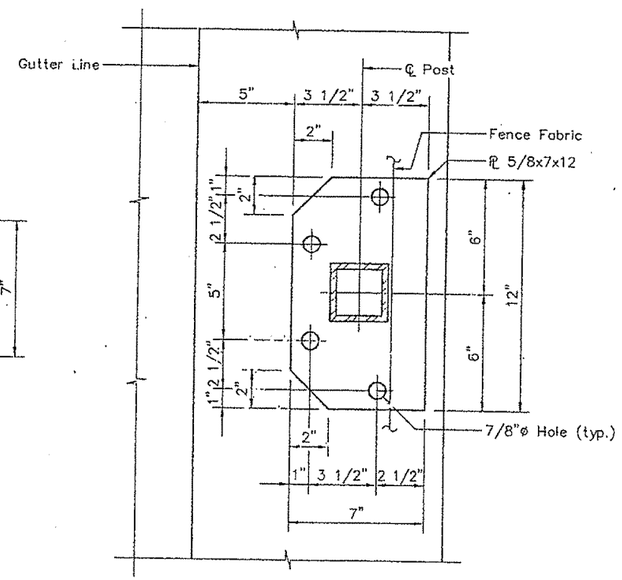

VIEW B-B

TYPICAL FENCE POST ANCHORAGE

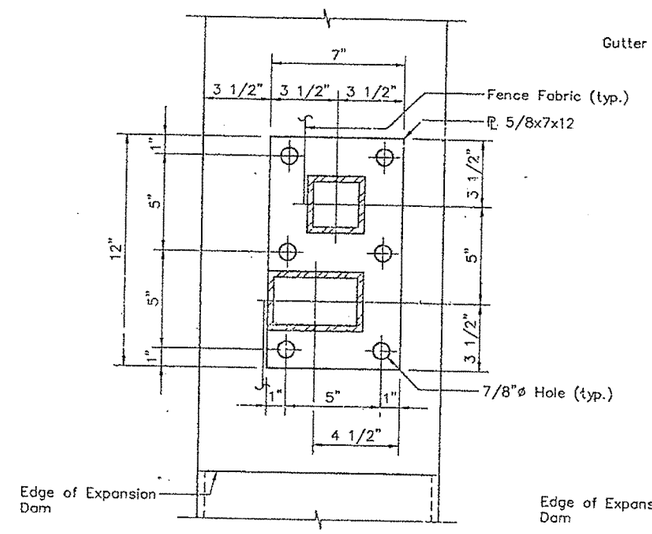

VIEW C-C

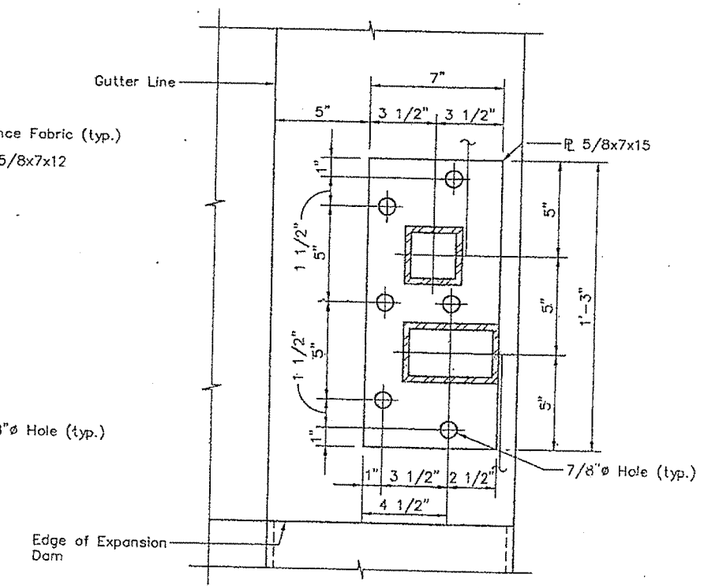

VIEW D-D

FENCE POST ANCHORAGE AT FINGER JOINT EXPANSION DAMS

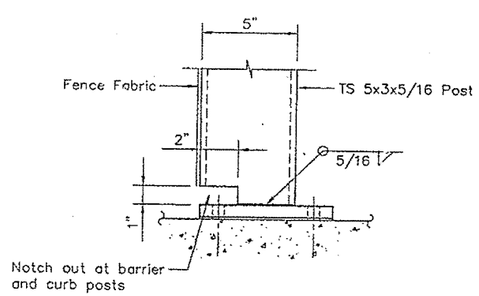

DETAIL E

1 Revise Dimensions see Addendum #3

STEEL ALTERNATIVE SUPERSTRUCTURE

STATE OF MAINE
DEPARTMENT OF TRANSPORTATION

PORTLAND - S. PORTLAND BRIDGE

OVER FORE RIVER

CUMBERLAND COUNTY

FENCE DETAILS - VI

SHEET 173A OF 182 AUGUSTA, MAINE

F.H.W.A. REG. NO.	STATE	PROJECT NUMBER	SHEET NO.	TOTAL SHEETS
1	MAINE	0068(002)	174	182

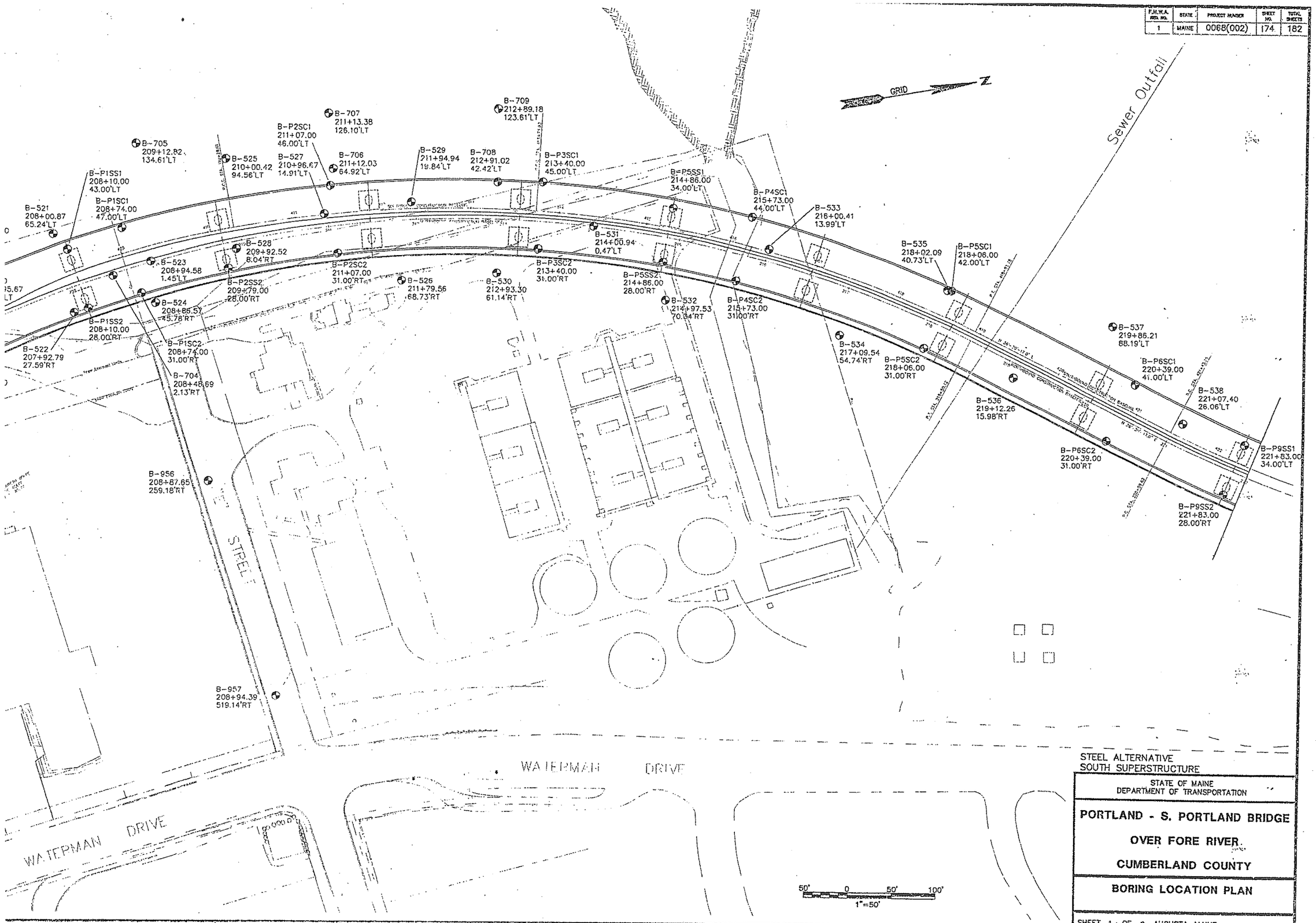

STEEL ALTERNATIVE
SOUTH SUPERSTRUCTURE

STATE OF MAINE
DEPARTMENT OF TRANSPORTATION

PORTLAND - S. PORTLAND BRIDGE

OVER FORE RIVER

CUMBERLAND COUNTY

BORING LOCATION PLAN

SHEET 1 OF 2 AUGUSTA, MAINE

F.H.W.A. REG. NO.	STATE	PROJECT NUMBER	SHEET NO.	TOTAL SHEETS
1	MAINE	0068(002)	175	182

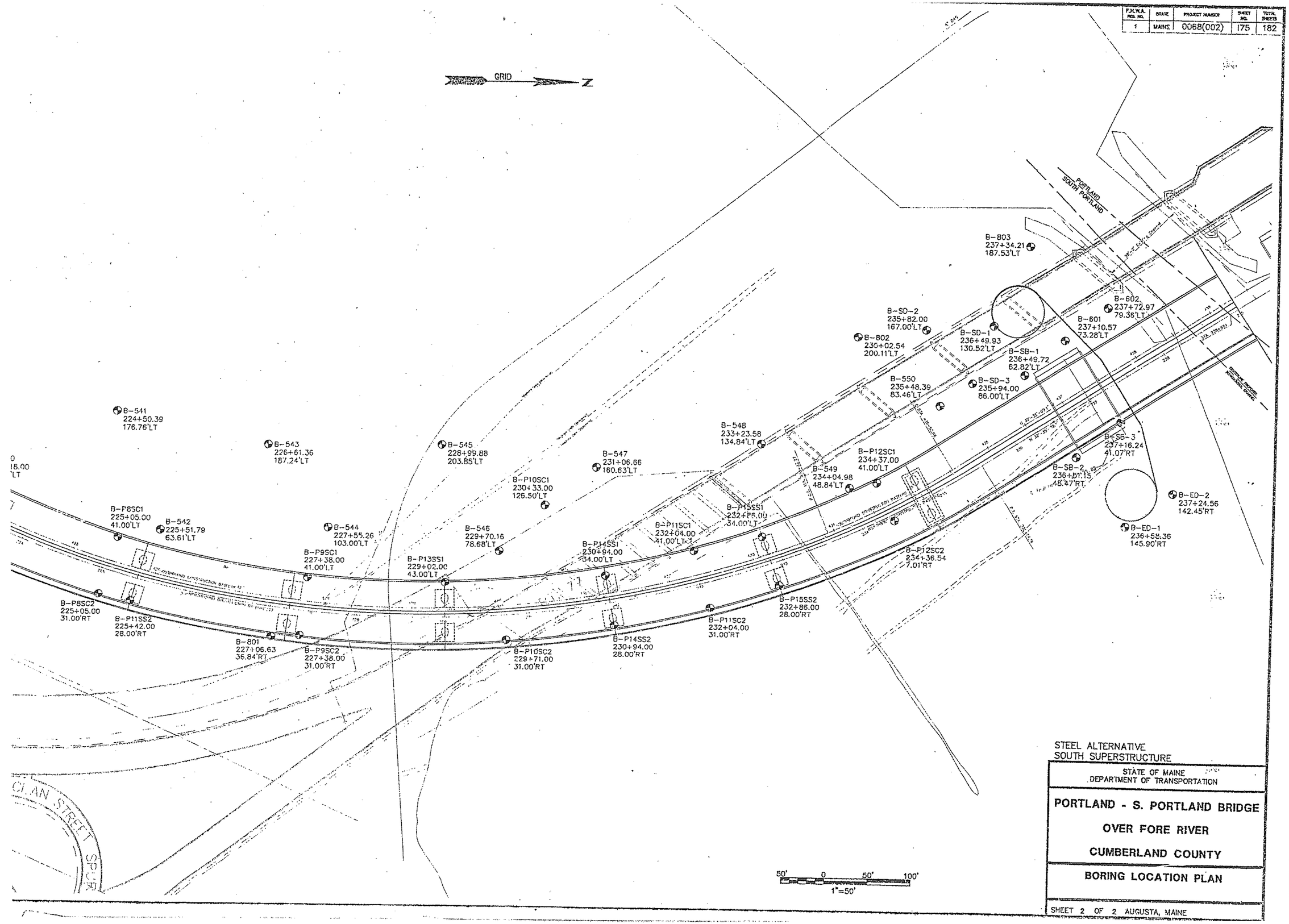

STEEL ALTERNATIVE
SOUTH SUPERSTRUCTURE

STATE OF MAINE
DEPARTMENT OF TRANSPORTATION

PORTLAND - S. PORTLAND BRIDGE

OVER FORE RIVER

CUMBERLAND COUNTY

BORING LOCATION PLAN

SHEET 2 OF 2 AUGUSTA, MAINE